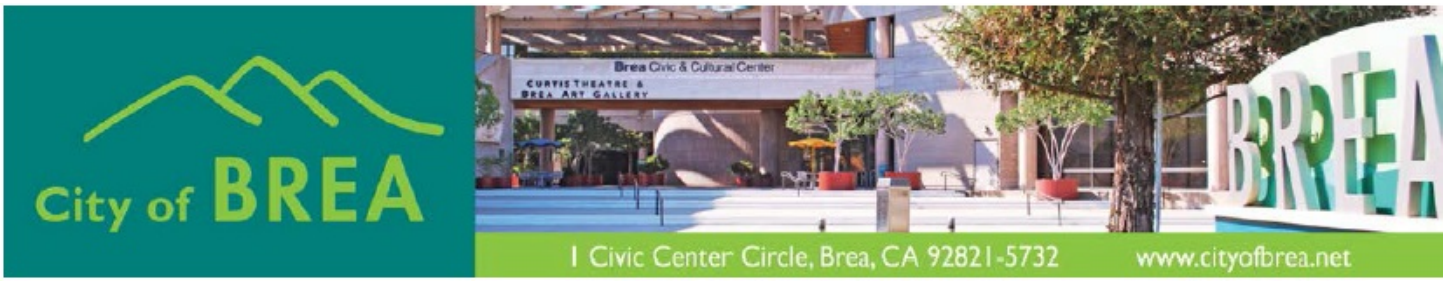

City Council and Successor Agency to the Brea Redevelopment Agency Agenda

Tuesday, August 17, 2021
6:00 p.m. - Closed Session
7:00 p.m. - General Session

***Steven Vargas**, Mayor* ***Cecilia Hupp**, Mayor Pro Tem*
***Christine Marick**, Council Member* ***Glenn Parker**, Council Member* ***Marty Simonoff**, Council Member*

This agenda contains a brief general description of each item Council will consider. The City Clerk has on file copies of written documentation relating to each item of business on this Agenda available for public inspection. Contact the City Clerk's Office at (714) 990-7756 or view the Agenda and related materials on the City's website at www.cityofbrea.net. Materials related to an item on this agenda submitted to the Council after distribution of the agenda packet are available for public inspection in the City Clerk's Office at 1 Civic Center Circle, Brea, CA during normal business hours. Such documents may also be available on the City's website subject to staff's ability to post documents before the meeting.

Procedures for Addressing the Council
This meeting is being conducted consistent with Governor Newsom's Executive Order N-29-20 dated March 17, 2020, regarding the COVID-19 pandemic.

Written comments may be sent to cityclerksgroup@cityofbrea.net no later than 12:00 p.m. on Tuesday, August 17, 2021 which will be summarized aloud into the record at the meeting. To provide comments in person, the Council Chambers will be open. To provide comments by teleconference (Zoom), members of the public must contact City Staff at (714) 990-7756 or cityclerksgroup@cityofbrea.net no later than 12:00 p.m. on Tuesday, August 17, 2021 to obtain the Zoom Meeting ID number and password. Teleconference participants will be muted until recognized at the appropriate time by the Council. The meeting will also be broadcast live at www.cityofbrea.net.

Special Accommodations
In compliance with the Americans with Disabilities Act, if you need special assistance to participate in this meeting, please contact the City Clerk's Office at (714) 990-7757. Notification 48 hours prior to the meeting will enable City staff to make reasonable arrangements to ensure accessibility. (28 CFR 35.102.35.104 ADA Title II)

Important Notice
The City of Brea shows both live broadcasts and replays of City Council Meetings on Brea Cable Channel 3 and over the Internet at www.cityofbrea.net. Your attendance at this public meeting may result in the recording and broadcast of your image and/or voice as previously described.

CLOSED SESSION
6:00 p.m. - Executive Conference Room
Level Three

CALL TO ORDER / ROLL CALL - COUNCIL

1. **Public Comment**

Closed Session may convene to consider matters of purchase / sale of real property (G. C. §54956.8), pending litigation [G.C.§54956.9(d)(1)], potential litigation [G.C. §54956.9(d)(2)(3) or (4)], liability claims (G. C. §54961) or personnel items (G.C.§54957.6). Records not available for public inspection.

2. **Conference with City's Labor Negotiator Pursuant to Government Code §54957.6 Regarding the Brea Fire Association (BFA); Brea Fire Management Association (BFMA); Brea Police Association (BPA); Brea Police Management Association (BPMA); Part-Time Employees; and Executive Managers** - Chris Emeterio, Negotiator, Cindy Russell, Negotiator, and Mario E. Maldonado, Negotiator.

3. **Conference with Legal Counsel Pursuant to Government Code Section 54956.9(d)(1) - Existing Litigation**. Name of Case: Lucas Builders, Inc. v. City of Brea (Case No. 30-2020-01147152-CU-BC-NJC)

GENERAL SESSION
7:00 p.m. - Council Chamber
Plaza Level

CALL TO ORDER/ ROLL CALL - COUNCIL

4. **Pledge of Allegiance: Brea Police Explorers**

5. **Invocation: Daniel Mendoza, Celebration OC**

6. **Presentation: 2021 Investment Advisory Committee (IAC) Annual Update Presentation and City Treasurer Presentation - *Long-Term Debt Obligation Overview***

   Attachments
   IAC Presentation
   City Treasurer Presentation

7. **Presentation: Police Department Hiring and Training**

   Attachments
   RCJTC Presentation
   Brea Hiring Process Presentation

8. **Community Announcements**

9. Matters from the Audience

Written comments may be sent to cityclerksgroup@cityofbrea.net no later than 12:00 p.m. on Tuesday, August 17, 2021 which will be summarized aloud into the record at the meeting. To provide comments in person, the Council Chambers will be open. To provide comments by teleconference (Zoom), members of the public must contact City Staff at (714) 990-7756 or cityclerksgroup@cityofbrea.net no later than 12:00 p.m. on Tuesday, August 17, 2021 to obtain the Zoom Meeting ID number and password. Teleconference participants will be muted until recognized at the appropriate time by the Council. The meeting will also be broadcast live at www.cityofbrea.net.

10. Response to Public Inquiries - Mayor / City Manager

CONSENT CALENDAR - *The City Council/Successor Agency approves all Consent Calendar matters with one motion unless Council/Agency or Staff requests further discussion of a particular item. Items of concern regarding Consent Calendar matters should be presented during "Matters from the Audience."*

CITY COUNCIL - CONSENT

11. July 20, 2021 City Council Regular Meeting Minutes - Approve.

Attachments

Minutes

12. July 22, 2021 City Council Special Meeting Minutes - Approve.

Attachments

Draft Minutes

13. Site Maintenance and Restoration Agreement for property located at 2700 E. Imperial Hwy - Approve the Site Maintenance and Restoration Agreement. There is no fiscal impact to the General Fund.

Attachments

EXHIBIT 'A' - PROPERTY LOCATION

EXHIBIT 'B' - SEWER MAIN AND EASEMENT AREA

Site Maintenance and Restoration Agreement

14. Accept Public Improvements, Authorize City Clerk to Release Improvement Bonds and Accept One-Year Warranty Bond for Tract No. 17160 for La Floresta Development Planning Area 10 Located at the Northeast Corner of Imperial Highway and Valencia Avenue - Accept Public Improvements; authorize the City Clerk to release Improvement Bonds; and accept One-year Warranty Bond. There is no fiscal impact to the General Fund.

Attachments

Exhibit "A" - Site Location

One-Year Warranty Bond

15. **Mutual Aid Agreement for COVID-19 Vaccination Effort with the County of Orange -** Approve Mutual Aid Memorandum of Agreement and Resolution No. 2021-051 between County of Orange and City of Brea. This Agreement may allow the City of Brea to receive reimbursement for costs associated with staffing the Vaccination PODs.

Attachments

Resolution for MOA with Orange County

Mutual Aid Agreement for COVID PODs

16. **Software/Hardware Maintenance Support and Online Subscription Service Agreements** - Authorize the Purchasing Agent to approve renewal agreements with various support services providers for the life of the computer software or hardware and for online software subscription services; and Authorize the Purchasing Agent to issue purchase orders totaling $149,436.00 for these renewal agreements that do not to exceed available budget appropriations. The City Council adopted Fiscal Year 2021-22 Budget has sufficient funding available for these purchases.

17. **Purchase of new Taser 7 CEW Devices for Police Department -** Approve the purchase of sixty-five Taser 7 CEW devices and related accessories from Axon Enterprises, Inc. for $173,142.83. The FY 21-22 adopted Operating Budget allocated $174,523 for this purchase in account 172-21-2141-4639.

Attachments

Decision Package

Axon Taser Limited Distribution Letter

Quote from Axon

Quote from ProForce

18. **Purchase of New Zebra Brand Ticket-Writer Printers for Police Department** - Approve the purchase of thirty-two new Zebra brand model ZQ521 ticket-writer printers (and related accessories) from MSA Systems, Inc. for $28,360.28. The FY 21-22 adopted Operating Budget allocated $32,100 for this purchase in account 172-21-2141-4639.

Attachments

Decision Package

Quote from MSA Systems

19. **Fire Investigation Services Agreement - City of Anaheim -** Approve The Fire Investigation Services Contract between the City of Anaheim and City of Brea. The projected impact to the General Fund would be $3,500.

Attachments

Fire Investigator Services Agmt

20. **Award the Country Hills Pavement & Water Improvements, CIP Project No. 7322** - Approve the Plans and Specifications; Receive bids; Award Contract to the lowest responsive and responsible bidder, Williams Pipeline Contractors, Inc., in the amount of $4,791,264.52; and Authorize the City Engineer to issue Change Orders up to a "not to exceed" amount of 10% of the Contract Price. The Project budget is programmed in the FY 2021- 22 Capital Improvement Program. There is no fiscal impact to the General Fund.

Attachments

Vicinity Map

Proposal

21. **Purchase of Two (2) Generac Industrial Diesel Generators** - Authorize purchase of two (2) Generac industrial diesel engine-driven generators for Booster Pump Stations Nos. 2 and 3 for not-to-exceed amount of $103,045.31. Sufficient funds for the purchase of the generators are available in the Capital Improvement Program budgets for Booster Pump Stations Nos. 2 and 3. There is no fiscal impact to the General Fund.

Attachments

Quote-BP2

Quote-BP3

22. **Acceptance of the Imperial Highway/Berry Street Intersection Improvements, CIP Project No. 7278** - Accept project as complete and authorize City Clerk to record Notice of Completion; and Authorize the City Clerk to release the Payment and Performance Bonds. The source of funds for the project is the Traffic Impact Fund (Fund 540). There is no fiscal impact to the General Fund.

Attachments

Location Map

NOC

23. **Acceptance of the Country Lane Street Rehabilitation, CIP Project No. 7323** - Accept project as complete and authorize City Clerk to record Notice of Completion; and Authorize City Clerk to release the Payment and Performance Bonds. The project was funded through the Measure M Fund (Fund 260) and the Gas Tax Fund (220). There is no fiscal impact to the General Fund.

Attachments

Location Map

NOC

24. **Resolution in Support of a Veterans Cemetery in Anaheim** - Adopt Resolution No. 2021-052 in support of the establishment of a veterans cemetery in the City of Anaheim.

Attachments

Resolution

25. **Ratify Termination and Award Multiple Contracts for Landscape Maintenance Services at Various Locations in the City of Brea -**Ratify Termination of S.C. Yamamoto, Award Landscape Maintenance Agreements to Nieves Landscape Inc. for Mowing at City Parks, Landscape Maintenance at City Medians, and various Maintenance Districts totaling $364,103.00; and Authorize City Manager to approve contract extensions.

Attachments

Agreement for Parks Mowing

Agreement - City Medians

Agreement - MD1
Agreement - MD3
Agreement - MD6
Agreement MD7
Notice to Cure
Notice of Termination
Fee Schedule Parks Mowing
Fee Schedule City Medians Greenbelts Entry Markers
Fee Schedule MD1
Fee Schedule MD3
Fee Schedule MD6
Fee Schedule MD 7
Approved COI Nieves

26. **Budget Adjustment to Remodel Areas of Police Administration** - Appropriate $40,000 from the City's Fixed Asset Replacement Fund (Fund 182) to the Civic Center Remodel Project (CIP 7955) to remodel the Police Department's Professional Standards office and the Police Administration kitchen area. The project is recommended to be funded by the Fixed Asset Replacement Program Fund (182). There is no fiscal impact to the General Fund.

27. **Investment Policy Guidelines for the City of Brea's Employee Benefits Fund Pension Plan** - Review and approve the Investment Policy Guidelines for the City of Brea's Employee Benefits Fund Pension Plan through Public Agency Retirement Services (PARS). There is no fiscal impact to the General Fund.

Attachments

Pension Trust Fund Investment Policy Guidelines - Redline Version
Pension Trust Fund Investment Policy Guidelines - Clean Version

28. **Investment Policy Guidelines for the City of Brea's Other Post Employment Benefits (OPEB) Trust Fund** - Review and approve the Investment Guidelines for the City's Other Post Employment Benefits (OPEB) Trust Fund through Public Agency Retirement Services (PARS). There is no fiscal impact to the General Fund.

Attachments

OPEB Trust Investment Policy Guidelines - Redline Version
OPEB Trust Investment Policy Guidelines - Clean Version

29. **Annual Review of Statement of Investment Policy for the City of Brea/Successor Agency to the Brea Redevelopment Agency** - Review and approve the City of Brea/Successor Agency to the Brea Redevelopment Agency Statement of Investment Policy. There is no fiscal impact to the General Fund.

Attachments

Current Investment Policy - Adopted 8/18/20
Proposed Final Investment Policy - Redlined Version
Proposed Final Investment Policy - Clean Version

30. **Monthly Report of Cash Investments for the City of Brea for Period Ending June 30, 2021** - Receive and file.

Attachments

Attachment A

31. **Outgoing Payment Log and July 23 & 30 and August 6 & 13, 2021 City Disbursement Registers -** Receive and file.

Attachments

City Outgoing Payment Log

07-23-2021 Disbursement Register

07-30-2021 Disbursement Register

08-06-2021 Disbursement Register

08-13-2021 Disbursement Register

CITY/ SUCCESSOR AGENCY - CONSENT

32. **Monthly Report of Cash Investments for the Successor Agency to the Brea Redevelopment Agency for Period Ending June 30, 2021** - Receive and file.

Attachments

Attachment A

33. **Annual Review of Statement of Investment Policy for the City of Brea/Successor Agency to the Brea Redevelopment Agency** - Review and approve the City of Brea/Successor Agency to the Brea Redevelopment Agency Statement of Investment Policy. There is no fiscal impact to the General Fund.

Attachments

Current Investment Policy - Adopted 8/18/20

Proposed Final Investment Policy - Redlined Version

Proposed Final Investment Policy - Clean Version

34. **Successor Agency Disbursement Registers July 26, 2021 and July 30, 2021 -** Receive and file.

Attachments

07-30-2021 Successor Agency Disbursement Register

ADMINISTRATIVE ANNOUNCEMENTS

35. **City Manager**

36. **City Attorney**

37. **Council Requests**

COUNCIL ANNOUNCEMENTS

ADJOURNMENT

Agenda Item 6.

City of Brea

COUNCIL COMMUNICATION

TO: Honorable Mayor and City Council Members

FROM: Bill Gallardo, City Manager

DATE: 08/17/2021

SUBJECT: 2021 Investment Advisory Committee (IAC) Annual Update Presentation and City Treasurer Presentation - *Long-Term Debt Obligation Overview*

RESPECTFULLY SUBMITTED:

William Gallardo, City Manager
Prepared by: Alicia Brenner, Senior Fiscal Analyst
Concurrence: Cindy Russell, Administrative Services Director

Attachments

IAC Presentation
City Treasurer Presentation

Investment Advisory Committee Update

City Council Meeting | *August 17, 2021*

CITY of BREA

Agenda

- ✓ **Investment Advisory Committee (IAC) Members**
- ✓ **Chandler Asset Management**
- ✓ **Public Agency Retirement Services (PARS)/High Mark Capital Management**

Meet the Committee

Christine Marick……**Council Member / Chair**

Denise Eby……..**Treasurer**

Ho-El Park ……**Committee Member**

Dave Penn……**Committee Member**

Gary Terrazas……..**Committee Member**

Project Managers

Chris McCarry/Bill Dennehy……**Chandler Asset Management**

Keith Stribling……**High Mark Capital Management**

Background

The Investment Advisory Committee was established to review and make recommendations on the investment policy and investment strategies and is designed to strengthen the internal control of investment management of the City's funds.

Chandler Asset Management

Investment Objectives	Performance Objectives	Strategy
• *To first preserve principal in the overall portfolio;* • *Secondly, to provide adequate liquidity to meet operating needs;* • *Lastly, to earn a return that is commensurate with the first two objectives.*	• *Achieve a rate of return over a market cycle that equals or exceeds the return on a market index of similar duration and sector allocation.*	• *In order to achieve these objectives, the portfolio invests in high-quality fixed income securities consistent with the investment policy and California Government Code.*

Economic Update

As of June 30, 2021

Will $5.5 Trillion Stimulus Propel Growth and Inflation?

Fiscal Package	Amount
CARES Act	$2.23 Trillion
Coronavirus Relief Bill	$484 Billion
Phase 4 Stimulus	$908 Billion
American Rescue Plan	$1.9 Trillion
Total So Far	**$5.5 Trillion**

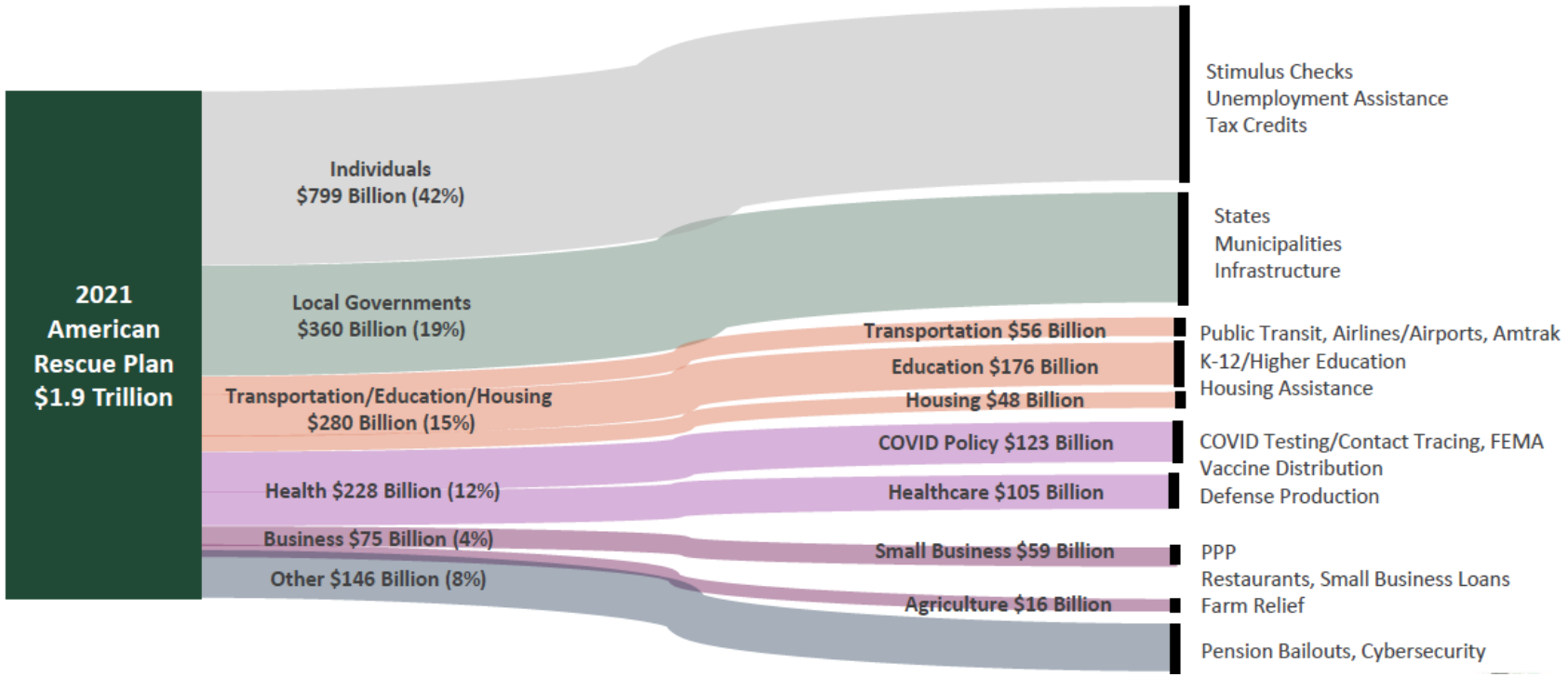

Unemployment and Inflation

Employment

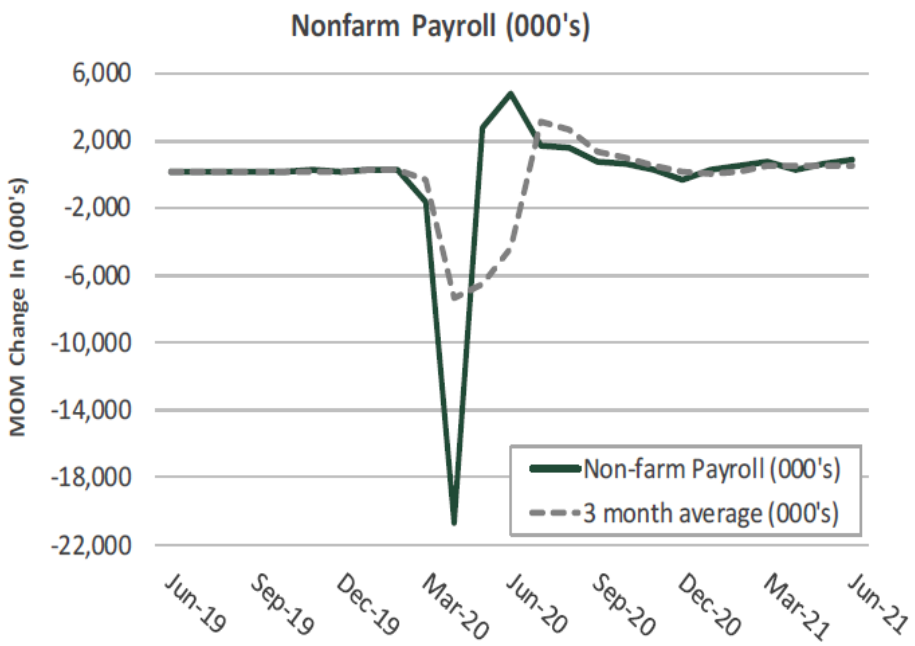

Source: US Department of Labor

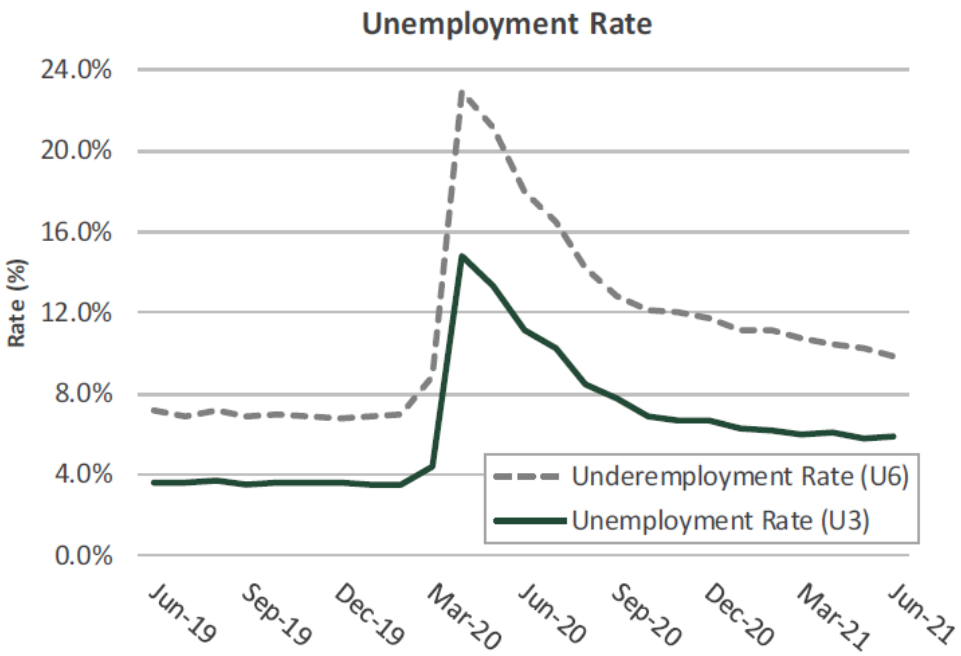

Source: US Department of Labor

Unemployment and Inflation

Inflation

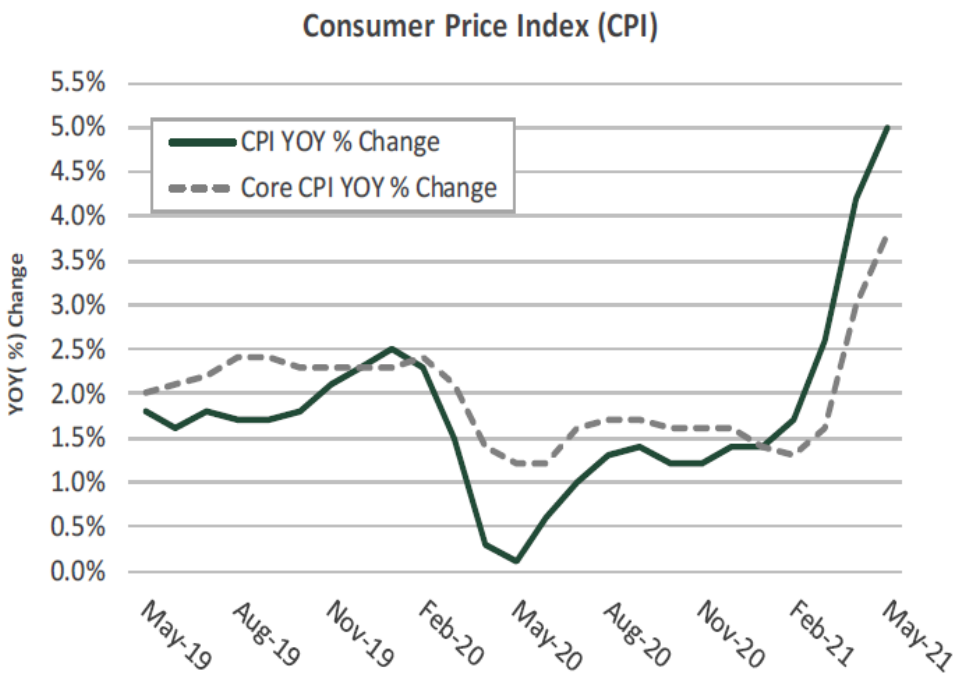

Source: US Department of Labor

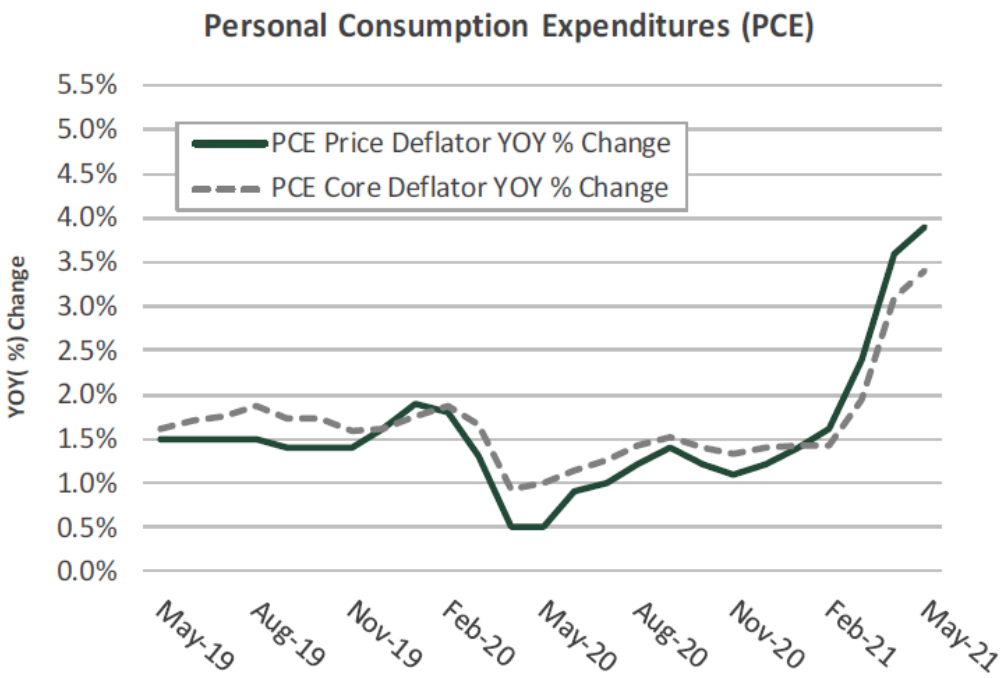

Source: US Department of Commerce

Gross Domestic Product

Gross Domestic Product (GDP)

Components of GDP	6/20	9/20	12/20	3/21
Personal Consumption Expenditures	-24.0%	25.4%	1.6%	7.4%
Gross Private Domestic Investment	-8.8%	12.0%	4.4%	-0.6%
Net Exports and Imports	0.6%	-3.2%	-1.5%	-1.5%
Federal Government Expenditures	1.2%	-0.4%	-0.1%	0.9%
State and Local (Consumption and Gross Investment)	-0.4%	-0.4%	-0.1%	0.1%
Total	**-31.4%**	**33.4%**	**4.3%**	**6.4%**

Source: US Department of Commerce

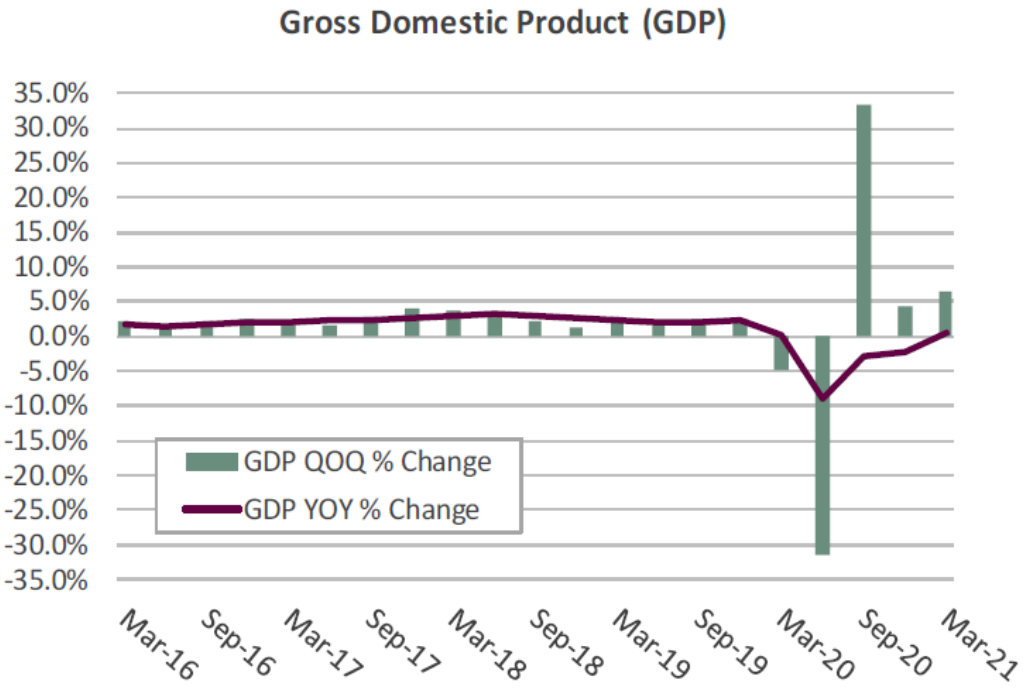

Source: US Department of Commerce

Bond Yields

Bond Yields

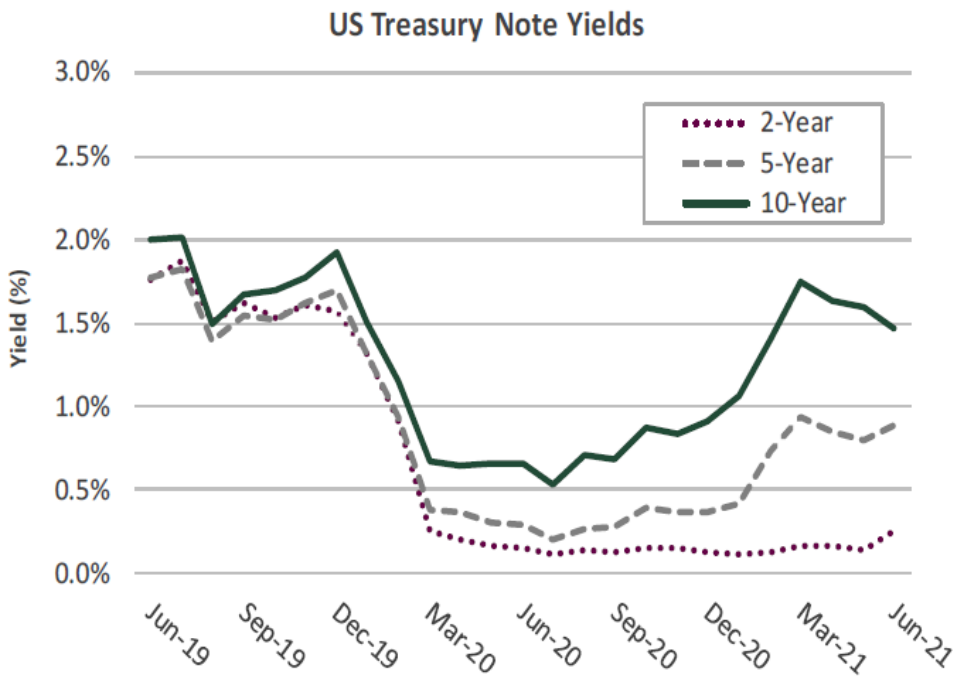

Source: Bloomberg

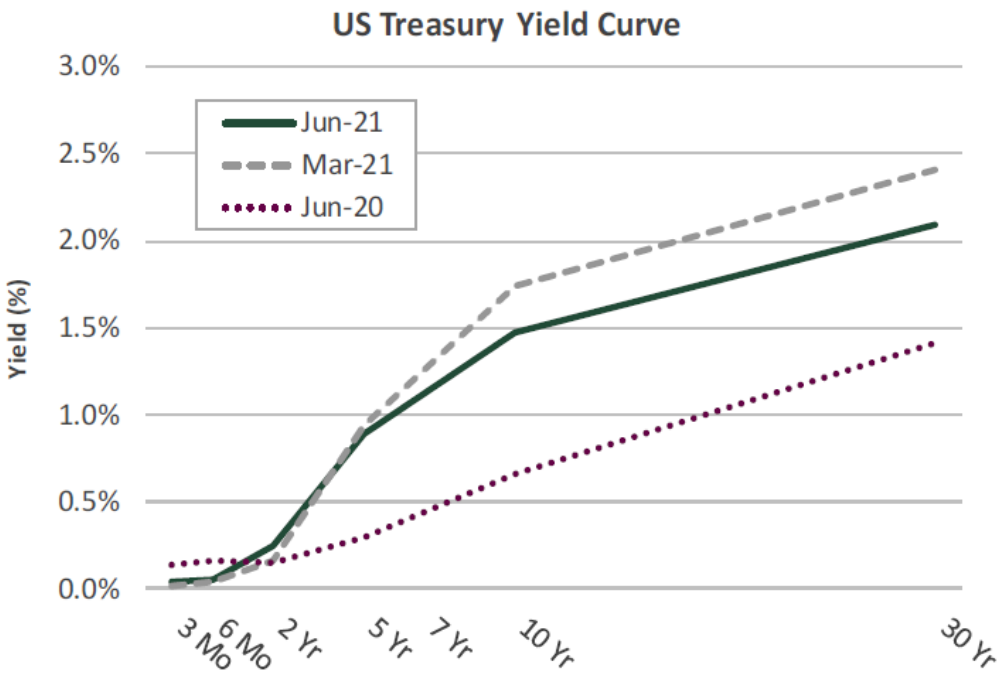

Source: Bloomberg

City Portfolio Summary *as of June 30, 2021*

CITY of BREA

PORTFOLIO CHARACTERISTICS

Average Modified Duration	2.60
Average Coupon	1.64%
Average Purchase YTM	1.51%
Average Market YTM	0.49%
Average S&P/Moody Rating	AA/Aa1
Average Final Maturity	2.88 yrs
Average Life	2.66 yrs

ACCOUNT SUMMARY

	Beg. Values as of 5/31/21	End Values as of 6/30/21
Market Value	93,666,279	93,510,693
Accrued Interest	375,503	335,812
Total Market Value	**94,041,782**	**93,846,506**
Income Earned	121,004	118,372
Cont/WD		0
Par	91,259,310	91,450,839
Book Value	91,551,146	91,741,470
Cost Value	91,685,842	91,896,660

TOP ISSUERS

Government of United States	26.1%
Federal National Mortgage Assoc	15.5%
Federal Home Loan Bank	10.9%
Federal Home Loan Mortgage Corp	10.1%
Inter-American Dev Bank	4.3%
JP Morgan Chase & Co	1.9%
Bank of America Corp	1.8%
Honda ABS	1.7%
Total	**72.2%**

SECTOR ALLOCATION

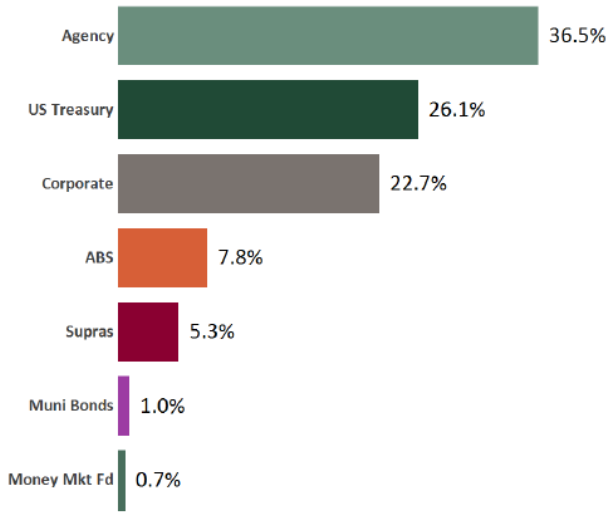

MATURITY DISTRIBUTION

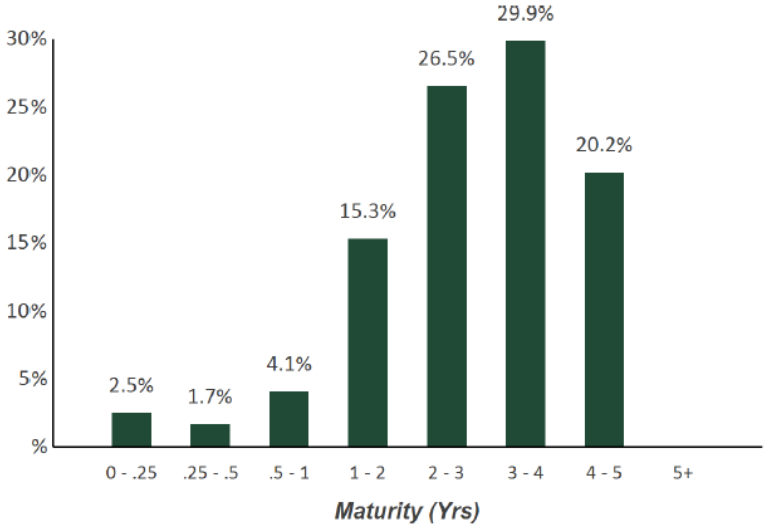

CREDIT QUALITY (S&P)

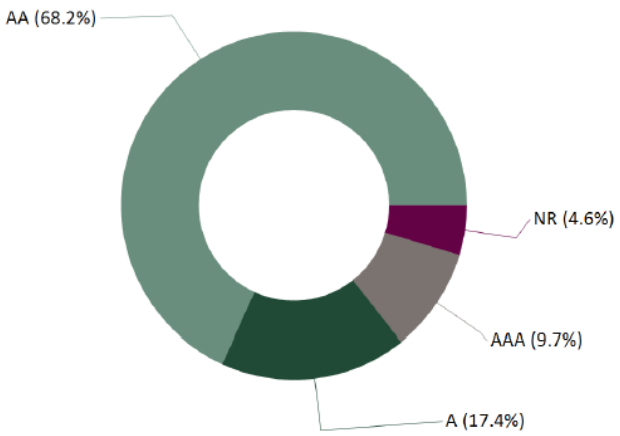

Compliance

City of Brea

Assets managed by Chandler Asset Management are in full compliance with state law and with the Client's investment policy

Category	Standard	Comment
U.S Treasuries	No limitations; Bills, Notes, and Bonds	*Complies*
Federal Agencies	25% max per issuer; 5% max in callables bonds issued by Agencies; U.S. Government Agency securities and instrumentality of government-sponsored corporations	*Complies*
Supranational Obligations	"AA" rated or higher by a NRSRO; 15% maximum; 5% max per issuer	*Complies*
Municipal Securities	5% max issuer; Other investments that are legal investments through the State of California Government Code	*Complies*
Corporate Medium Term Notes	"A" rated or better by a NRSRO; 30% maximum; 5% max per issuer	*Complies*
Pass Through Securities, Asset-Backed Securities (ABS), CMOs	"AA" rated or higher by a NRSRO; 20% maximum (combined), 10% maximum (ABS); 5% max per issuer	*Complies*
Negotiable Certificates of Deposit (NCD)	30% maximum; 5% max per issuer	*Complies*
Certificates of Deposit (CDs)/ Time Deposits (TDs)	5% max issuer; FDIC Insured and/or Collateralized	*Complies*
Banker's Acceptances	40% maximum; 5% max issuer; 180 days max maturity	*Complies*
Commercial Paper	A-1/P-1 by S&P and Moody's; 25% maximum; 5% max per issuer; 270 days max maturity	*Complies*
Money Market Funds	Highest rating by two NRSROs; 20% maximum; 5% max per fund	*Complies*
Local Agency Investment Fund (LAIF)	40%;<60%, with OCIP	*Complies*
OCIP/ County Pool	40%;<60%, with LAIF	*Complies*
Repurchase Agreements	5% max issuer; 1 year max maturity	*Complies*
Prohibited	Derivatives, inverse floaters, range notes, or interest-only strips derived from a pool of mortgages; any security that could result in a zero interest accrual if held to maturity	*Complies*
Downgrade	If a security owned by the City is downgraded to a level below the requirements of the policy, making the security ineligible for additional purchases, the following steps will be taken: -Any actions taken related to the downgrade by the investment manager will be communicated to the City Treasurer and the Administrative Services Director within two (2) business days; -If a decision is made to retain the security, the credit situation will be monitored and reported to the City Council.	*Complies*
Max Per Issuer	5% max per issuer, with the exception of U.S. Treasuries, U.S. Federal Government Agency obligations, Approved State and County investment pools	*Complies*
Maximum Maturity	5 years	*Complies*

On November 17, 2015, the City Council approved the adoption of the PARS Post Employment Benefit Trust to address the City's unfunded pension and Other Post Employment Benefit (OPEB) obligations through a City-controlled trust.

Benefits of the trusts include:

- Assets in the trust can be used to address the City's Net Pension and OPEB Liabilities; and
- Provides a funding source to help stabilize increasing CalPERS rates during challenging economic times; and
- Enables more flexibility to increase investment returns in the long run compared to the earnings from the City's General Fund.

Public Agency Retirement Services | PARS

Section 115 Trust Accounts

Trust Structure & Benefits

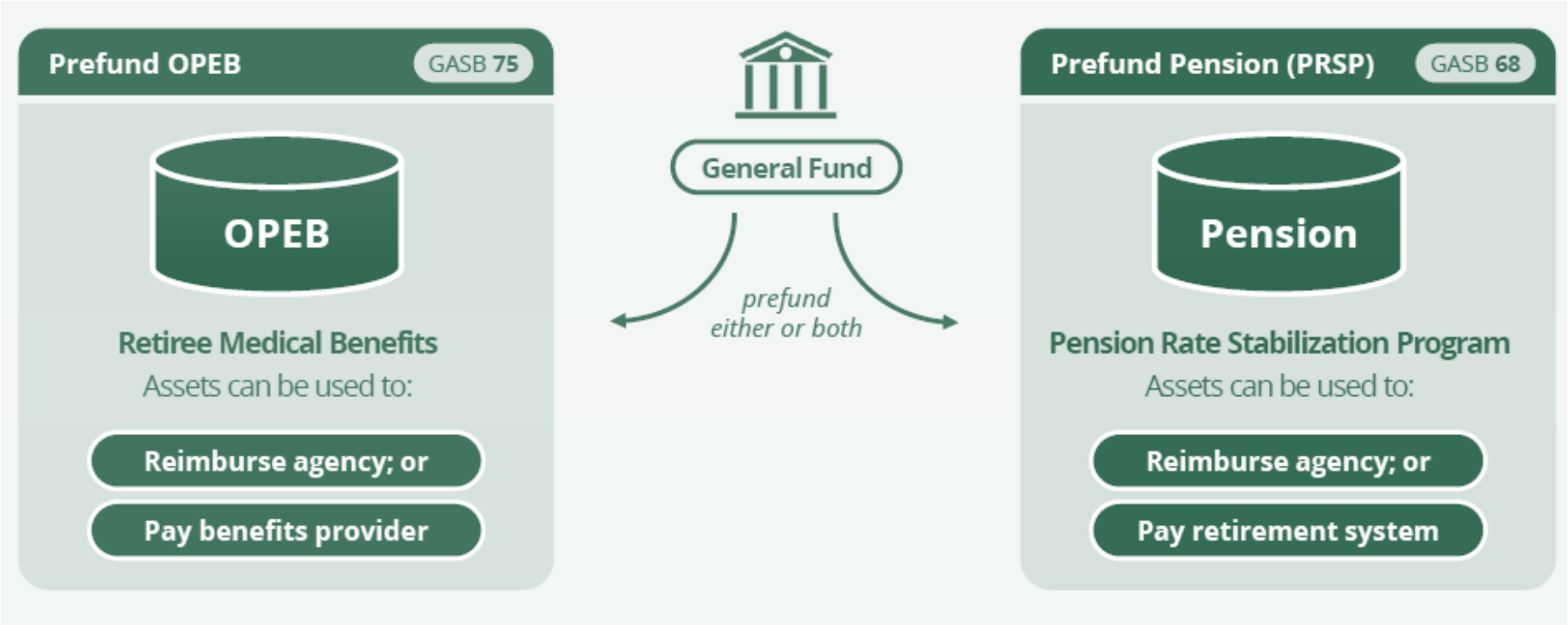

PARS Pension Portfolio Summary *as of June 30, 2021*

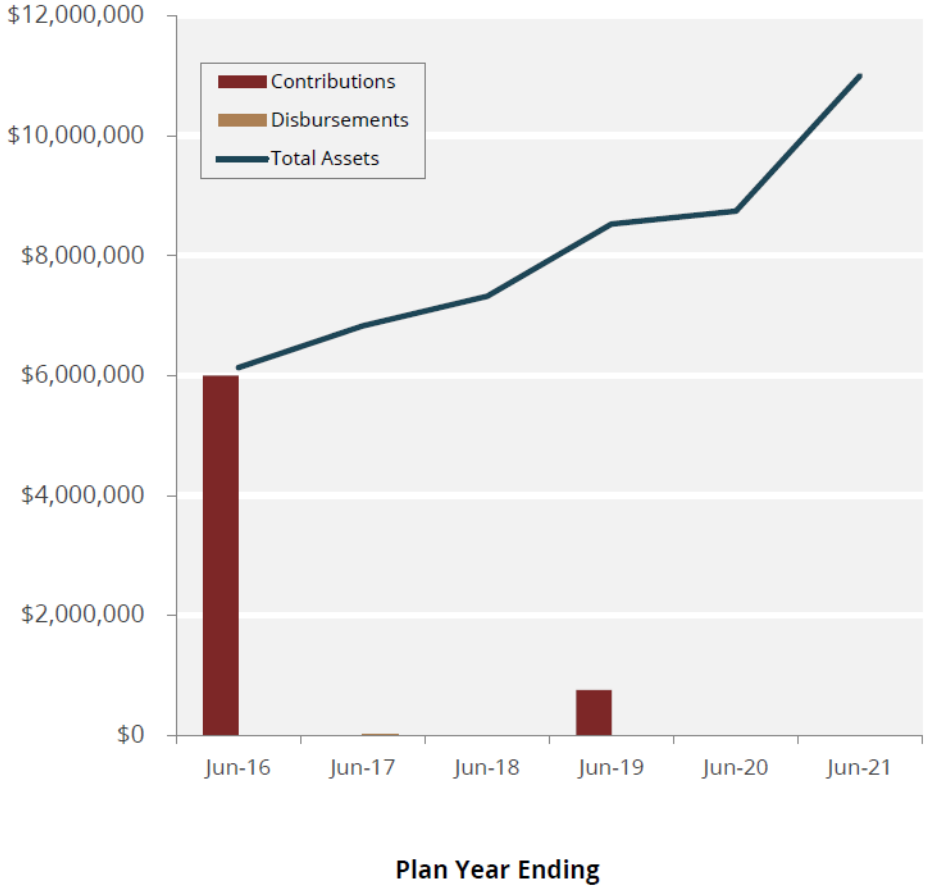

Type of Plan:	IRC Section 115 Irrevocable Benefit Trust
Trustee Approach:	Discretionary
Plan Effective Date:	November 17, 2015
Plan Administrator:	Bill Gallardo - City Manager
Current Investment Strategy:	Balanced High Mark PLUS (Active)-Individual Act Allocation Target – 63.94% stocks (50-70% range), 31.42% bonds (30-50% range), 4.64% cash (0-20% range)
Initial Contribution:	February 19, 2016 – $2,000,000
Additional Contributions:	April 22, 2016 - $2,000,000 June 17, 2016 - $2,000,000 June 25, 2019 – $756,800
Balance as of June 30, 2021:	$11,003,080
Inception to Date Return (02/01/2016)	11.18%

Questions?

City Treasurer Presentation

Long-Term Debt Obligation Overview

City Council Meeting | *August 17, 2021*

CITY of BREA

Overview

- General Fund Obligations
- Water Revenue Bonds
- Successor Agency to the Former Redevelopment Agency Bonds
- Pension and Related Obligations

General Fund Revenue Bonds and Capital Lease Obligation Maturity Schedule*

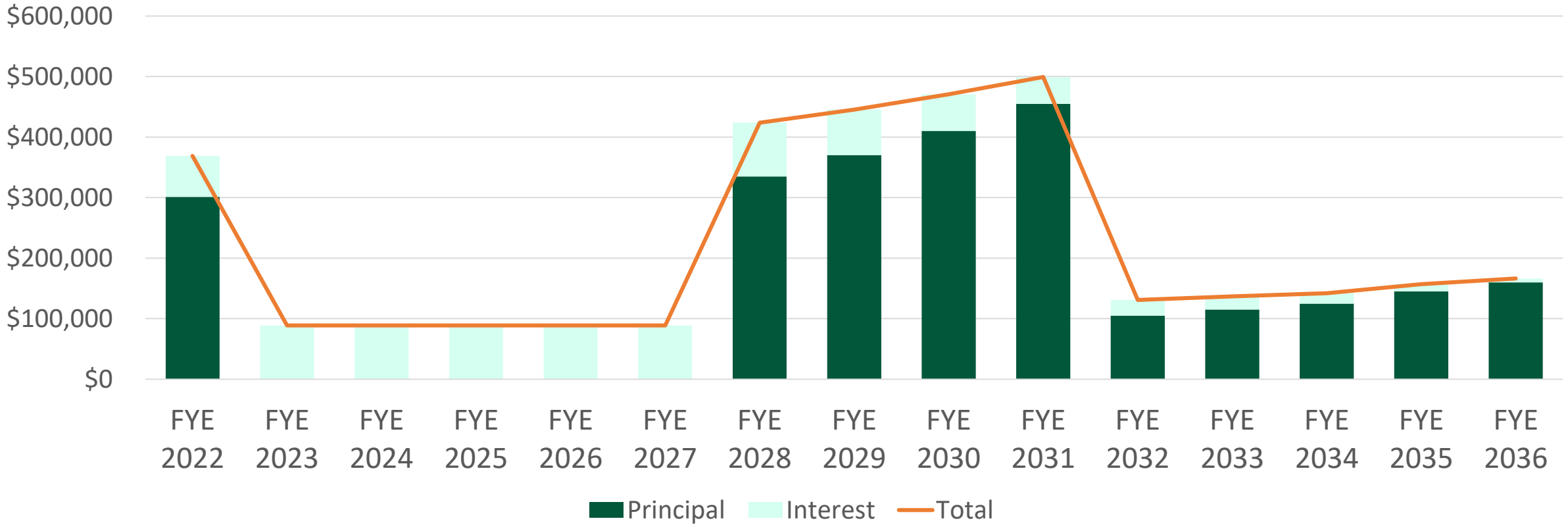

* - final payment on capital lease is 06-01-2022

Water Revenue Bonds Maturity Schedule

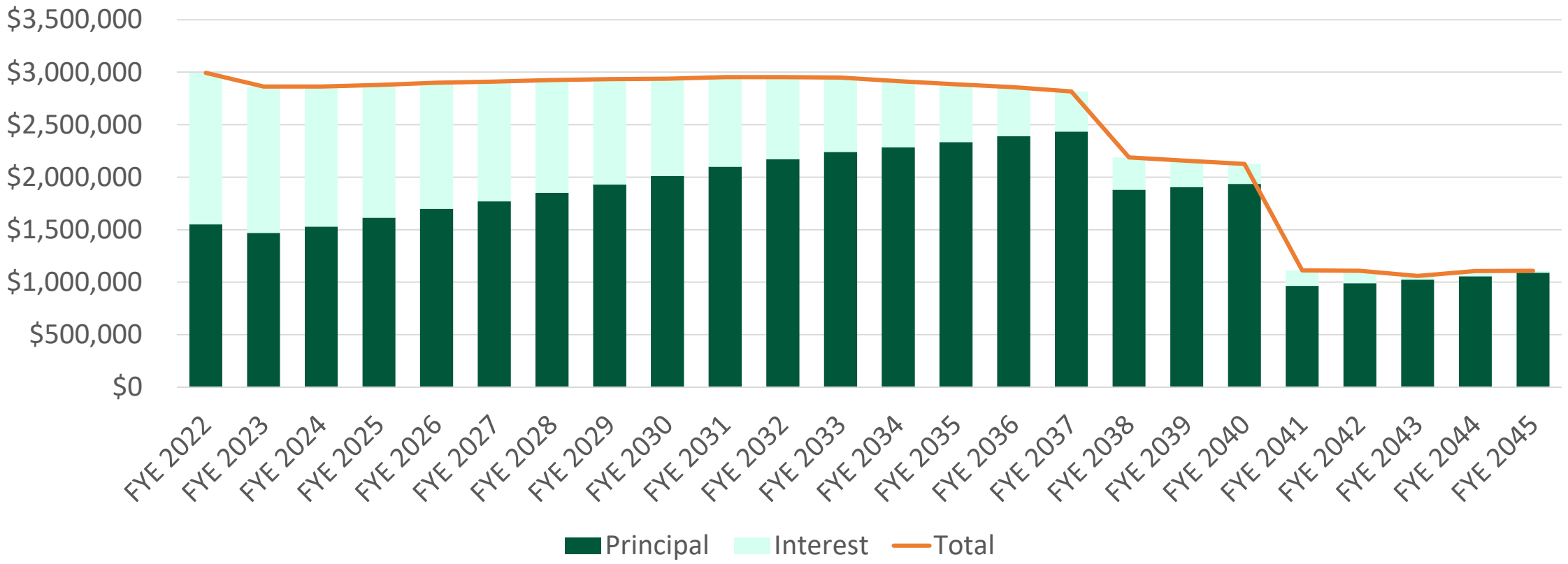

Successor Agency Bonds and Long-Term Obligation Maturity Schedule*

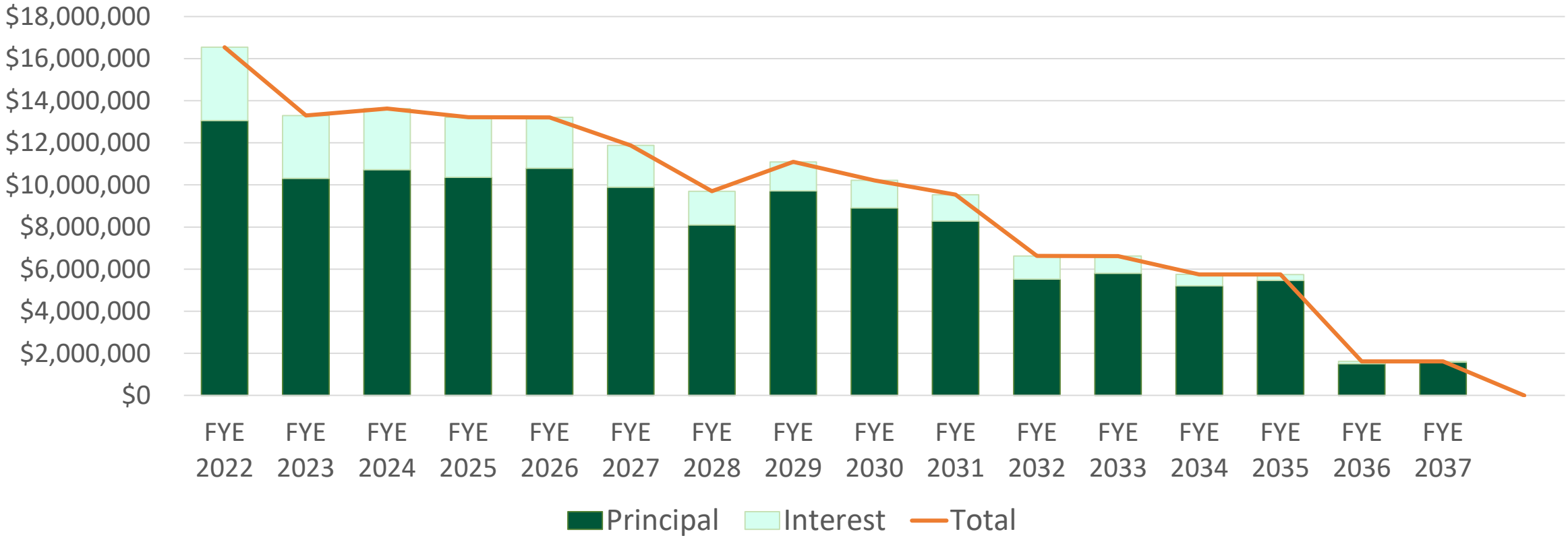

* - final payments on Successor Agency long-term obligations totaling $3,156,304 will occur during the fiscal year ending June 30, 2022

Brea Unfunded Pension Liability

Based Upon 6/30/19 Actuarial Reports

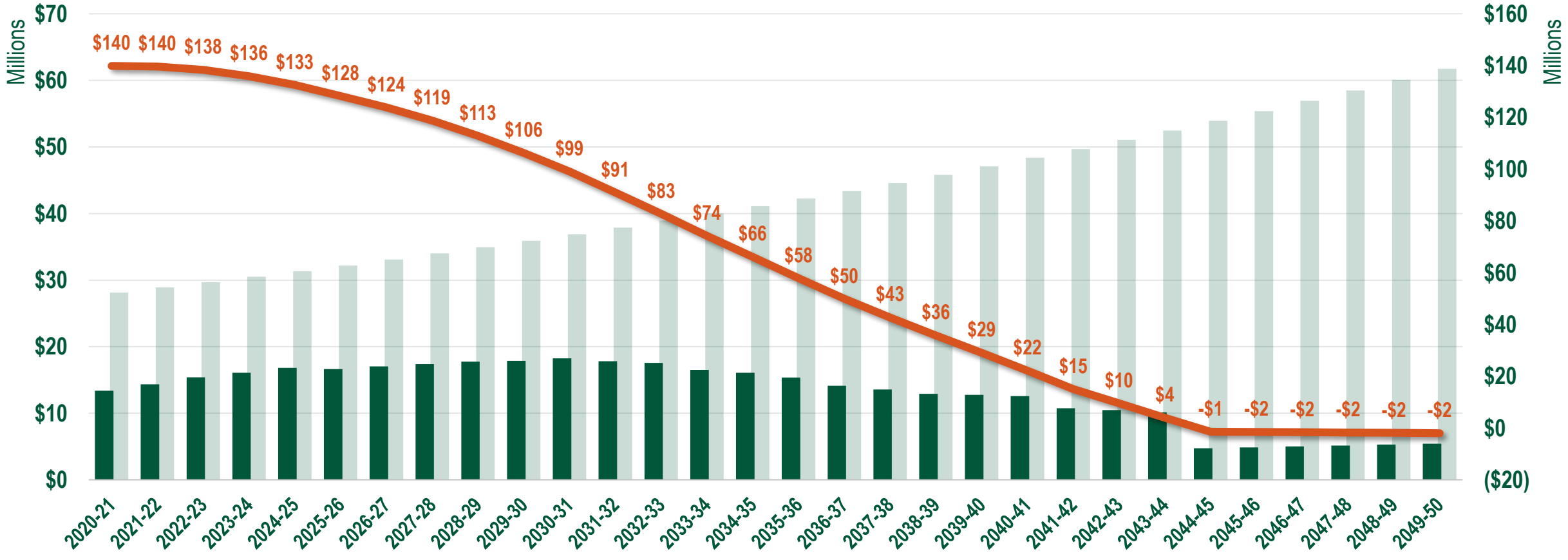

Total Employer Cost | Projected Payroll (CalPERS Assumptions) | Total Projected Unfunded Accrued Liability (UAL)

Sources

- Brea Annual Financial Statement – FYE 06-30-2020
  https://www.ci.brea.ca.us/DocumentCenter/View/679/City-of-Brea-CAFR?bidId=

- Brea FY 2021-22 Annual Operating Budget Document
  https://www.ci.brea.ca.us/DocumentCenter/View/10192/Operating-Budget-Document

- Pension Ad Hoc Subcommittee
  https://www.ci.brea.ca.us/1578/Pension-Ad-Hoc-Subcommittee

- Brea City Council's Top Priorities
  https://www.ci.brea.ca.us/1059/Council-Top-Priorities

Summary

- Brea continues to meet and exceed its requirement to maintain an AA Investment grade rating
- Liquidity is strong
- Brea is current on all obligations
- I have no concerns regarding the City's ability to meet its scheduled payments for this fiscal year
- All scheduled payments for this fiscal year can be made from current year revenues without drawing from reserves

Questions?

City of Brea

COUNCIL COMMUNICATION

TO: Honorable Mayor and City Council Members

FROM: Bill Gallardo, City Manager

DATE: 08/17/2021

SUBJECT: Police Department Hiring & Training

RECOMMENDATION
N/A

BACKGROUND/DISCUSSION
Captain Rodriguez and Golden West Academy Director Timothy Vu will present on the police officer hiring process and current police academy training.

COMMISSION/COMMITTEE RECOMMENDATION
N/A

FISCAL IMPACT/SUMMARY
N/A

RESPECTFULLY SUBMITTED:
William Gallardo, City Manager
Prepared by: Philip Rodriguez, Lieutenant

Attachments
RCJTC Presentation
Brea Hiring Process Presentation

Golden West College Regional Criminal Justice Training Center

REGULAR BASIC COURSE-INTENSIVE FORMAT

TIMOTHY VU, ASSOCIATE DEAN & DIRECTOR

OUR LEGACY IS OUR VISION:

INNOVATION
SERVICE
CHARACTER
SUCCESS

CRIMINAL JUSTICE TRAINING CENTER AT GOLDEN WEST COLLEGE

Historical Overview:

- Criminal Justice Training Center (CJTC) has operated under the auspices of the CCCD for 60 years
- First college-based academy certified by Peace Operations Specialized Training (POST) (October 1960)
- 164 presentations of the Regular Basic Course (RBC)
- Thousands of police recruits have graduated from Golden West College (GWC) CJTC
- Hundreds of recruits have been promoted to executive level management
- The first academy in California to offer self-sponsorship
- Training partner of the Josephson Institute of Ethics

Josephson Institute of Ethics
Six Pillars of Character

Regular Basic Course-Intensive Format

POST minimum standard of 664 hours which is spread over 42 different learning domains

GWC Regional Criminal Justice Training Center (RCJTC) presents 1,009 hours over 24 weeks which is significantly above the POST minimum

Purposely enhanced curriculum with an emphasis in Leadership, Ethics, and Community Policing

Infused Law Enforcement Code of Ethics (LECOE) and Six Pillars of Character into every learning domain

Regular Basic Course Curriculum Minimum Standard:

POST MINIMUM:

664 hours

42 Learning Domains

POST emphasis-Leadership, Ethics & Community Policing

GWC RCJTC:

1,009 hours

42 POST Learning Domains

5 additional GWC Specific content Learning Domains

Purposely enhanced Learning Domains

Infused LECOE & Six Pillars of Character

Golden West Enhanced Curriculum

LD 1 Leadership, Professionalism & Ethics (8 additional hours)

Officers are empowered and entrusted by the community with a broad range of power, authority, and discretion to maintain safety and order. Professional and ethical standards are the means by which peace officers maintain public trust.

- **LD 3 Principled Policing in the Community**

Topics discussed in this newly expanded domain are community partnerships, principled policing, procedural justice, implicit bias, and how historic and current events affect the perspectives of law enforcement.

GWC RCJTC Enhanced Curriculum (continued)

Golden West Specific Content:

- **Learning Domain 52-Community Oriented Policing (44 hours)**
  - Ethics, Values, COPS/SARA model, Problem Solving, Implicit Bias, Peer Pressure, Accountability, Agency Ride Along, Role of Citizens in Society
- **Learning Domain 53-Conductive Electronics Weapons**
- **Learning Domain 54-K-9 Use in Law Enforcement**
- **Learning Domain 55-CVC 40600 Traffic Collision Investigations**
- **Learning Domain 56-Museum of Tolerance-Tools for Tolerance in Law Enforcement**

SCENARIO DEMONSTRATION and TESTING

*Additional hours devoted to scenario based training emphasizing:

- Force Options
- Duty to Intercede
- Conflict Resolution
- De-Escalation
- Tactical Communication
- Community Care and Service

2019 POST Excellence in Training Award

Prestigious Award that spotlights the following:

Organizational Achievement

Contributions to Law Enforcement

Innovation

Quality & Effectiveness at the State level

RECRUITMENT & HIRING PROCESS

BREA POLICE DEPARTMENT,
Captain Phil Rodriguez

City of BREA

APPLICATION PROCESS

- Application
- Applications will be screened by both our Professional Standards Lieutenant and Management Analyst
- Written Exam – Taken off-site through the National Testing Network

PHYSICAL & ORAL INTERVIEW

- Physical Fitness Qualifier (PFQ)
  - 1.5 Mile Run (anything over 15:30 is 0 points)
  - Timed Push-Ups (2 minutes, max score is 56 push-ups, less than 12 is 0 points)
  - 440 Yard Sprint (max score is under 1:25 and less than 2:35 is 0 points)
  - Dummy Drag (165-pound dummy – 32 feet, less than 7 seconds is max, more than 28 seconds is a 0)
- On the same day as the PFQ, successful candidates will take the Oral Interview
  - Tell us about yourself.
  - (LATERAL) Why did you become a police officer, and why are you interested in coming to Brea now? (ENTRY-LEVEL) Why do you want to be a police officer?
  - We will also ask a series of situational questions to measure their ability to be creative and pro-active in their problem solving.

PERSONAL HISTORY STATEMENT / POLYGRAPH

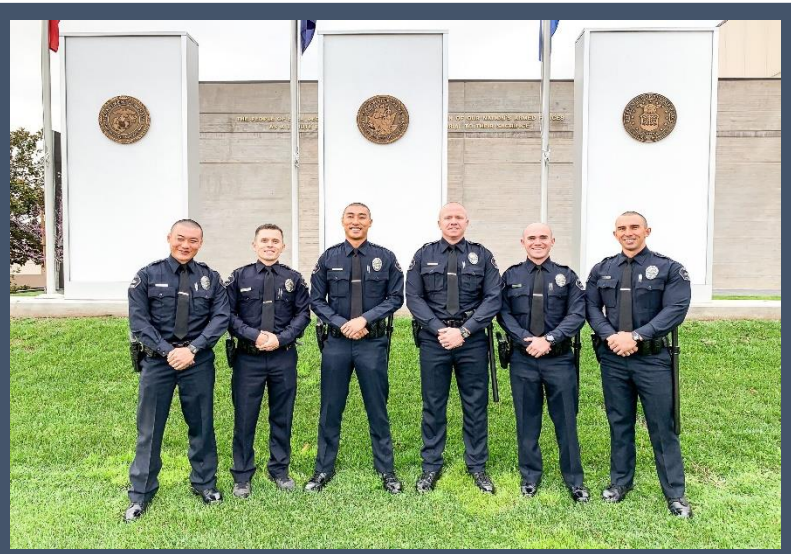

- This is the beginning of the background process.
- The applicant completes the Personal History Statement (PHS)
- This is a 55+ page document that includes 30 pages of pre-poly / pre-background questions.
- An autobiography is also required.

- The PHS is reviewed by the Professional Standards Lieutenant, both Captains, and the Chief.
- If approved by all 3, the applicant is sent to the Polygraph.

BACKGROUND

- Once the applicant has successfully passed the Polygraph, they move on to the Background Investigation.
- We contract these services with RCS Investigations.
- RCS is made up of mostly retired police officers who have experience conducting background investigations.

- The Background Investigator will interview former employers, significant others, former boyfriend's/girlfriend's, etc.
- There will be a Credit Check, Criminal History Check, etc.

CHIEF'S INTERVIEW

- Once the background is complete, the packet is submitted to the Professional Standards Lieutenant for review. Once again, both Captains and the Chief review the packet.
- If approved, the applicant is then scheduled for a Chief's Interview.
- This gives the Chief an opportunity to decide if he wants the applicant to move forward in the process.

PSYCHOLOGICAL & MEDICAL EXAM

City of BREA

- Each applicant must pass a psychological examination that consists of both a written test (MMPI) and an oral interview with a Police Psychologist.
- The psychologist has a profile of the type of police officer we want and uses that to aid in his/her assessment.

- The Medical Exam is rather exhaustive and includes checking things like hearing, vision, BMI, the cardiovascular system, etc.

YOU'RE HIRED!

City of BREA

- This is just the beginning as the applicant must now endure a strenuous Police Academy course, followed by a stressful Field Training Program.
- The process is long and arduous, but typically produces a well-trained, well-rounded, competent, and compassionate police officer.

POLICE ACADEMY

RETIRED CHIEF TIMOTHY VU, DIRECTOR OF THE GOLDEN WEST POLICE ACADEMY

City of BREA

City of Brea

COUNCIL COMMUNICATION

TO: Honorable Mayor and City Council Members

FROM: Bill Gallardo, City Manager

DATE: 08/17/2021

SUBJECT: July 20, 2021 City Council Regular Meeting Minutes

RECOMMENDATION

Approve

RESPECTFULLY SUBMITTED:

William Gallardo, City Manager
Prepared by: Lillian Harris-Neal, City Clerk

Attachments

Minutes

D R A F T

BREA CITY COUNCIL
SUCCESSOR AGENCY TO THE
BREA REDEVELOPMENT AGENCY
MEETING

MINUTES
JULY 20, 2021

CLOSED SESSION
5:15 p.m. - Executive Conference Room
Third Floor

CALL TO ORDER / ROLL CALL - COUNCIL
Mayor Vargas called the Closed Session to order at 5:15 p.m., all members were present.

Present: Marick, Simonoff, Hupp, Parker, Vargas

1. **Public Comment**
   None.

Closed Session may convene to consider matters of purchase / sale of real property (G. C. §54956.8), pending litigation [G.C.§54956.9(d)(1)], potential litigation [G.C. §54956.9(d)(2)(3) or (4)], liability claims (G. C. §54961) or personnel items (G.C.§54957.6). Records not available for public inspection.

2. **Conference with Legal Counsel Pursuant to Government Code Section 54956.9(d)(1)** - Existing Litigation. Name of Case: Aguirre v. City of Brea et al. (Case No. 30-2019-01103735-CU-PO-CJC)

3. **Conference with Legal Counsel Pursuant to Government Code Section 54956.9(d)(2) - Anticipated Litigation. Significant Exposure to Litigation:** 1 potential case. Facts and Circumstances: Brea Firefighters Association FLSA Matter.

4. **Conference with City's Labor Negotiator Pursuant to Government Code §54957.6 Regarding the Brea Management Association (Non-Safety); Brea City Employees' Association (BCEA); Administrative and Professional Employees' Association (APEA); Brea Fire Association (BFA); Brea Fire Management Association (BFMA); Brea Police Association (BPA); Brea Management Association (BMA); and the Brea Police Management Association (BPMA)** - Chris Emeterio, Negotiator, Cindy Russell, Negotiator, and Mario E. Maldonado, Negotiator.

Mayor Vargas adjourned the Closed Session at 6:05 p.m.

STUDY SESSION
6:00 p.m. - Council Chamber
Plaza Level

CALL TO ORDER / ROLL CALL - COUNCIL

Mayor Vargas called the Study Session to order at 6:08 p.m., all members were present.

5. Public Comment

None.

6. Clarify Regular Meeting Topics

Council Member Simonoff requested that Item 25 (Amended and Restated Sidewalk Vending Policy) be pulled from the Consent Calendar and discussed.

Regarding Item 30 (Non-Professional Services Agreement with All City Management Services to Provide Crossing Guard Services), Council Member Parker suggested adding crossing guards at two (2) additional locations: Laurel and Imperial and Orange and Imperial.

Council Member Parker requested that Item 29 (Award of Contract for Electoral Districting Services) be pulled from the Consent Calendar for a separate vote.

DISCUSSION ITEMS

7. District-Based Elections

City Manager Gallardo introduced National Demographics Corporation Vice President, Justin Levitt. Mr. Levitt, talked about the California Voting Rights Act (CVRA), explained the difference in federal and state law requirements for districting, provided the background/history of districting, discussed case law such as the Santa Monica case, and noted delays due to the pandemic.

Council discussed: how the CVRA is set up for the plaintiff to prevail; how pattern and math is the deciding factor of the CVRA; if the City is sued the plaintiffs can pick which election to use in court in which they usually choose the most contentious or divisive election they can find; burden of proof; the Santa Monica case; how courts can decide the district boundaries if needed; the desire to wait for census numbers; and the ability to use revised data after the census numbers are in.

8. Parking Restrictions at City Parking Facilities

Public Works Director Olmos and Police Chief Hawley presented a PowerPoint that included: the project background, follow-up from previous Council meeting discussion, data collection at parking lots of concern, proposed parking permit criteria, parking restrictions, feedback, and recommendations.

In response to Council questions, Public Works Director Olmos and Police Chief Hawley clarified that the proposed 12 month parking permits are per unit not per resident; noted that they will add a requirement to the permit that the vehicles must be operational; assured Council that parking restrictions will be implemented the same at all parking lots in question; and added that staff has not detailed the number of vehicles from the apartments that park in the parking lots in the past but has always known of problems with residents parking at Arovista Park.

Council Member Parker stated the he does not support parking permits because parking is taken away from event goers and suggested that safety elements are added for crossing Imperial to the parking lot.

Mayor Pro Tem Hupp noted that the policy should state that the permits are for Wildcatters and Arovista Parks only.

Council Member Marick stated that it should not be the City's job to subsidize parking, suggested that a specific area in the parking lot be designated for permit parking, and expressed concern about residents crossing Imperial to park their vehicles at City parks.

Mayor Vargas asked to continue the discussion to the offsitte meeting on July 22, 2021.

Council Member Simonoff suggested that cars with parking permits are checked for 72 hour parking violation and directed City staff to reach out to apartment staff to get more information about parking and bring the information back to a future Study Session.

9. Designate Voting Delegate and Alternate for League of California Cities Annual Conference & Expo, September 22 - 24, 2021 in Sacramento.

Council designated Mayor Vargas as the delegate and Mayor Pro Tem Hupp as the alternate for the League of Calfornia Cities Annual Conference & Expo in Sacramento on September 22-24.

REPORT

10. Council Member Report/Requests

Mayor Vargas announced that he will be on military active duty from July 26th through August 20th in San Diego, CA.

Mayor Vargas adjourned the Study Session at 6:58 p.m.

GENERAL SESSION
7:00 p.m. - Council Chamber
Plaza Level

CALL TO ORDER/ ROLL CALL - COUNCIL

Mayor Vargas called the General Session to order, all members were present.

11. Pledge of Allegiance

The Brea Police Explorers led the Pledge of Allegiance.

12. Invocation

Douglas Green, North Hills Church, delivered the Invocation.

13. Commendation

Mayor Vargas presented a commendation to Apollo Electric for their generous donation to the City of Brea.

14. Commendation

Mayor Vargas commended Dwight Manley for his generous donation to the City of Brea.

15. Presentation

Justin Golliher, Senior Project Manager for the County of Orange Department of Public Works, provided a PowerPoint briefing on the Brea Canyon Corridor Improvement Project which included: the background, project elements, map, wildlife overpass, project limit, timeline, phasing, project update, current status and next steps.

In response to Mayor Pro Tem Hupp's question, Mr. Golliher confirmed the Orange County has an easement for the wildlife overpass.

16. Report - Prior Study Session

City Manager Gallardo provided the Prior Study Session report.

17. Community Announcements

Council Member Parker announced that watering restrictions are in place due to drought conditions and noted that the City's Water Ordinance has been updated to promote water conservation. He provided the changes to the ordinance and informed residents to call (714) 990-7691 if they have questions.

Council Member Marick announced that Caltrans is closing the northbound 57 freeway Brea Canyon Road on-ramp beginning July 29 through November 1. Although the closure is outside of Brea, the community can anticipate noise, vibrations, and traffic delays during this time. Motorists are strongly advised to use alternate routes. For more information, visit the Caltrans website, dot.ca,gov.

Mayor Pro Tem Hupp announced that summer community events are in full swing. She highlighted events such as: Concerts in the Park on Wednesdays at 6:30 p.m. through August 11th; Family Films in the Park in the Arovista Park Ampitheather through July 23rd in the Arovista Park Amphitheater from 6:30 to 8:30 p.m.; and Brea Fest is returning this year on Friday, August 13th. Visit the City's website for more information on these events.

Mayor Vargas announced that the City is embarking on a comprehensive modernization of Arovista Park. Staff is asking residents and visitors to provide their feedback by taking the online survey available on the City's website until August 10, 2021. The survey is asking for thoughts on various park elements such as the sports fields, parking lots, playground, amphitheater, the Tracks at Brea Trail, and more.

18. Matters from the Audience

Lee Squire asked the Mayor to provide a Proclamation for Disability Pride Month.

Marissa Forte discussed the release of the State of Emergency and urged residents to get back to the norm.

Pastor Doug Green, North Hills Church, invited residents to attend the grand opening for the Senior Day Care Center at North Hills Church between 1:00 p.m. and 4:00 p.m. He stated that they will also celebrate Cliff, a Senior Day Care Center member who will turn 104 years old and commended Easter Seals for their work with the disabled.

Sean Thomas encouraged residents to get vaccinated and thanked Assistant City Manager Emeterio and Public Works Director Olmos for the work on the Tracks at Brea.

Michelle Forte expressed support for permit parking at the local parks.

Julia Stalls stated that she is offended by vendors that display offensive language in public locations and urged Council to rule against it.

Keith Fullington complained about loud mufflers on Peppertree and Lambert, expressed concern about the construction project on Lambert and the 57 Freeway, and urged Council to approve more events in the City.

City Clerk Lillian Harris-Neal read three (3) written comments:
Ryan Balediata expressed concern about the condition of the streets in Country Hills.

Linda Cornejo hoped that the vendors in front of the Gateway Center along Imperial Highway will be found in violation of the amended and restated vending policy.

The Briarwood neighborhood commended Ashley Reid on her service with the Brea City Clerk's Office.

19. Response to Public Inquiries - Mayor / City Manager
City Manager Gallardo responded to public inquiries.

PUBLIC HEARING - *This portion of the meeting is for matters that legally require an opportunity for public input. Audience participation is encouraged and is limited to 5 minutes per speaker.*

20. Public Hearing to Consider Levying an Assessment for Landscape and Lighting Maintenance Districts (LLMDs) #1, 2, 3, 4, 5, 6 and 7 for Fiscal Year 2021-2022
Public Works Superintendent Bill Bowlus provided an oral report.

Motion was made by Council Member Hupp, seconded by Council Member Parker to adopt Resolution Nos. 2021-029 through 2021-035, levying assessments for Fiscal Year 2021-2022 after receiving testimony at the Public Hearing on July 20, 2021.

AYES: Council Member Marick, Mayor Simonoff, Council Member Hupp, Council Member Parker, Mayor Pro Tem Vargas

Passed

CONSENT CALENDAR - *The City Council/Successor Agency approves all Consent Calendar matters with one motion unless Council/Agency or Staff requests further discussion of a particular item. Items of concern regarding Consent Calendar matters should be presented during "Matters from the Audience."*

CITY COUNCIL - CONSENT

21. June 15, 2021 City Council Regular Meeting Minutes
The City Council approved the June 15, 2021 City Council Regular Meeting Minutes.

22. Consideration of Adoption of the 2021 Water Master Plan
The City Council adopted Resolution No. 2021-046 approving and adopting the 2021 Water Master Plan.

23. Approval of Fiscal Year 2021-22 Property Tax Rate to Fund the City's Paramedic Program
The City Council adopted Resolution No. 2021-047, fixing the rate of tax upon the taxable property within the City of Brea for the Fiscal Year 2021-22 necessary to maintain a Mobile Intensive Care Program known as paramedics within the area of the City of Brea and certifying said rate of taxation to the Orange County Auditor-Controller.

24. Appropriation Request for General Plan Amendment/Zone Change
The City Counil appropriated $100,000 from the General Plan Maintenance Fund (Fund 120) for the purpose of conducting General Plan amendments/Zone changes as it pertains to the adoption of the 6th Cycle General Plan Housing Element (2021-2029).

25. Amended and Restated Sidewalk Vending Policy
Public Works Director Olmos explained the requirements of the amended and restated sidewalk vending policy.

Council discussed sign restrictions, umbrella height, and reducing the vendor permit period.

City Attorney Boga discussed the City's limits when dealing with first amendment rights and regulating the content of speech.

The City Council adopted Resolution No. 2021-048, adopting an amended and restated Sidewalk Vending Policy to more fully carry out the intent of SB 946 and to more fully protect the public health, safety, and welfare.

26. Local Emergency Termination
The City Council adopted Resolution No. 2021-049, terminating the existence of the COVID-19 local emergency.

27. Purchase of Panasonic CF-33 Toughbook Tablets for Police Department
The City Council approved the purchase of ten Panasonic CF-33 ToughBook tablets from CDCE, Inc. for $45,217.50.

28. Annual Vehicle and Equipment Purchase Plan for Fiscal Year 2021-22
The City Council authorized Purchasing Agent to issue purchase orders in an amount not-to-exceed $707,000 for various City vehicles and equipment described in the Annual Vehicle Replacement Plan for Fiscal Year 2021-22.

29. Award of Contract for Electoral Districting Services
This item was discussed and voted on separately from the Consent Calendar.

Council Member Parker expressed concern about Council making a decision on districting before receiving the Santa Monica case verdict and census results, suggested that Council delay, discussed public engagement, and noted that taking away local control is his biggest objection.

Council Member Simonoff believed that even if Santa Monica prevails, state legislation will work around the decision and require districting anyway.

Council Member Marick urged Council to keep control of the districting process so that it can be done in the most thoughtful way.

In response to Council questions, Justin Levitt - NDC, confirmed the different options that the court has when making decisions on districting.

Mayor Pro Tem Hupp expressed disappointment with the districting process; however, expressed support for approval of the contract noting that she prefers that the City maintain control over districting instead of the court.

Motion was made by Council Member Marick, seconded by Council Member Hupp to approve the Professional Services Agreement with National Demographics Corporation for Electoral Districting Services in the amount not-to-exceed $48,500 plus up to a 10% contingency; and authorize the City Manager to execute the Agreement and issue any amendments for required changes within the above not-to-exceed total.

AYES: Council Member Marick, Mayor Simonoff, Council Member Hupp, Mayor Pro Tem Vargas

NOES: Council Member Parker

Passed

30. Non-Professional Services Agreement with All City Management Services to Provide Crossing Guard Services

The City Council awarded contract to All City Management Services in an amount not-to-exceed $55,193.00 for as-needed Crossing Guard Services; authorized the City Manager to execute the agreement; and authorized the City Manager to approve contract extensions.

31. Approval of Memorandums of Understanding between the City of Brea and: 1) the Brea Management Association; 2) the Brea City Employees' Association; 3) the Administrative And Professional Employees' Association

The City Council adopted Resolution No. 2021-050, approving Memorandums of Understanding (MOU's) with the Brea Management Association (BMA), the Brea City Employees' Association (BCEA), and the Administrative and Professional Employees' Association (APEA).

32. Outgoing Payment Log and June 18, 25 and July 2, 9 and 16, 2021 City Check Disbursements

The City Council received and filed the Outgoing Payment Log and June 18, 25 and July 2, 9 and 16, 2021 City Check Disbursements.

33. Monthly Report of Cash Investments for the City of Brea for Period Ending May 31, 2021

The City Council received and filed the Monthly Report of Cash Investments for the City of Brea for Period Ending May 31, 2021.

Motion was made by Council Member Hupp, seconded by Council Member Parker to approve the Consent Calendar Items 21-33, except for Item 29 (Award of Contract for Electoral Districting Services).

AYES: Council Member Marick, Mayor Simonoff, Council Member Hupp, Council Member Parker, Mayor Pro Tem Vargas

Passed

CITY/ SUCCESSOR AGENCY - CONSENT

34. Successor Agency Disbursement Registers for June 25 and 30, 2021

The City Council received and filed the Successor Agency Disbursement Registers for June 25 abd 30, 2021.

35. Monthly Report of Cash Investments for the Successor Agency to the Brea Redevelopment Agency for Period Ending May 31, 2021

The City Council received and filed the Monthly Report of Cash Investments for the Successory Agency to the Brea Redevelopment Agency for Period Ending May 31, 2021.

Motion was made by Council Member Hupp, seconded by Council Member Parker to approve the City/Successor Agency Consent Calendar Items 34 and 35.

AYES: Council Member Marick, Mayor Simonoff, Council Member Hupp, Council Member Parker, Mayor Pro Tem Vargas

Passed

ADMINISTRATIVE ANNOUNCEMENTS

36. City Manager
None.

37. City Attorney
None.

38. Council Requests
None.

COUNCIL ANNOUNCEMENTS
None.

ADJOURNMENT
Mayor Vargas adjourned the General Session at 8:28 p.m.

Respectfully submitted,

The foregoing minutes are hereby approved this 17th day of August, 2021.

Lillian Harris-Neal, City Clerk

Steven Vargas, Mayor

Agenda Item 12.

City of Brea

COUNCIL COMMUNICATION

TO: Honorable Mayor and City Council Members

FROM: Bill Gallardo, City Manager

DATE: 08/17/2021

SUBJECT: **July 22, 2021 City Council Special Meeting Minutes** - Approve.

RESPECTFULLY SUBMITTED:
William Gallardo, City Manager
Prepared by: Lillian Harris-Neal, City Clerk

Attachments

Draft Minutes

D R A F T

BREA CITY COUNCIL
SUCCESSOR AGENCY TO THE
BREA REDEVELOPMENT AGENCY
SPECIAL MEETING

MINUTES
JULY 22, 2021

WORKSHOP
9:30 a.m. - Brea Community Center - Plaza Room
695 Madison Way, Brea, California, 92821

CALL TO ORDER/ ROLL CALL - COUNCIL

Mayor Vargas called the workshop to order at 9:36 a.m., all members were present.

Present: Marick, Simonoff, Hupp, Parker, Vargas

1. **Matters from the audience**

   Dwight Manley, Shannon Watson, Dara Maleki - CEO of Pizza Press, Tammy Vincent of McCallans Restaurant, and Dean Simon, President of Bruxie urged Council to provide more support for enhancing Downtown Brea and expressed support for adding more parklets in downtown area.

   Adam thanked Council for their hard work and stated that he is grateful to live in a city like Brea.

DISCUSSION ITEMS

2. **Council-Executive Staff Workshop**
   Council and staff discussed: staff goals, Council goals, citywide operational goals, Fiscal Year 2021-22 Council Priorities & Projects Status Update, upcoming topics, City follow-up, City Council roles and norms; and exceptional Council for exceptional times.

ADJOURNMENT
Mayor Vargas adjourned the City Council Special Study Session Meeting at 2:25 p.m.

Respectfully submitted,

The foregoing minutes are hereby approved this 17th day of August, 2021

Lillian Harris-Neal, City Clerk

Steven Vargas, Mayor

City of Brea

COUNCIL COMMUNICATION

TO: Honorable Mayor and City Council Members

FROM: Bill Gallardo, City Manager

DATE: 08/17/2021

SUBJECT: Site Maintenance and Restoration Agreement for property located at 2700 E. Imperial Highway

RECOMMENDATION

Approve Site Maintenance and Restoration Agreement

BACKGROUND/DISCUSSION

On February 25, 2020, the Planning Commission approved a conditional use permit for the proposed development at 2700 E. Imperial Highway per Resolution No. PC 2020-04, to demolish the existing buildings and construct a new self-storage building. Refer to Exhibit A - Property Location, attached hereon.

There is an existing eight-inch City owned and maintained sewer main located on the property within an existing 20-ft wide City owned easement for recreational and sanitary sewer purposes (“Easement Area”) along the northerly property line. Refer to Exhibit B for the location of the sewer main and Easement Area. As part of the conditions of approval, the property owner is required to enter into a Site Maintenance and Restoration Agreement ("Agreement") with the City, for the private improvements over the City owned easement area. The private improvements include utility cabinets, utility vaults, trees, landscape and irrigation system. The Agreement stipulates that in the event that any private improvements and/or landscaping are disturbed during City maintenance and/or replacement of the sewer main, the property owner shall be responsible to replace the private improvements. Furthermore, planting of any additional trees over the existing City owned sewer main shall not be permitted. The Agreement has been reviewed and approved as to form by the City Attorney.

FISCAL IMPACT/SUMMARY

There is no fiscal impact based on approval of this Agreement. The Agreement between the City and the property owner for the site maintenance and restoration responsibilities has been signed by the property owner. City staff is recommending that City Council consider approval of the Site Maintenance and Restoration Agreement.

RESPECTFULLY SUBMITTED:

William Gallardo, City Manager
Prepared by: Hsing Chao, Associate Engineer
Concurrence: Michael Ho, P.E. Deputy Public Works Director / City Engineer
Tony Olmos, P.E., Public Works Director

Attachments

EXHIBIT 'A' - PROPERTY LOCATION

EXHIBIT 'B' - SEWER MAIN AND EASEMENT AREA

Site Maintenance and Restoration Agreement

EXHIBIT 'A'
PROPERTY LOCATION
EXHIBIT
2700 E.
IMPERIAL HWY
S KRAEMER BLVD
E IMPERIAL HWY
PARKING LOT
PARKING LOT
KING LOT
2701
2700
2650
2750
500
2707 2715
2691
2681
2729
2687
2651
2741
2663
2749
2771 2761 2771
2761 2781
20 m

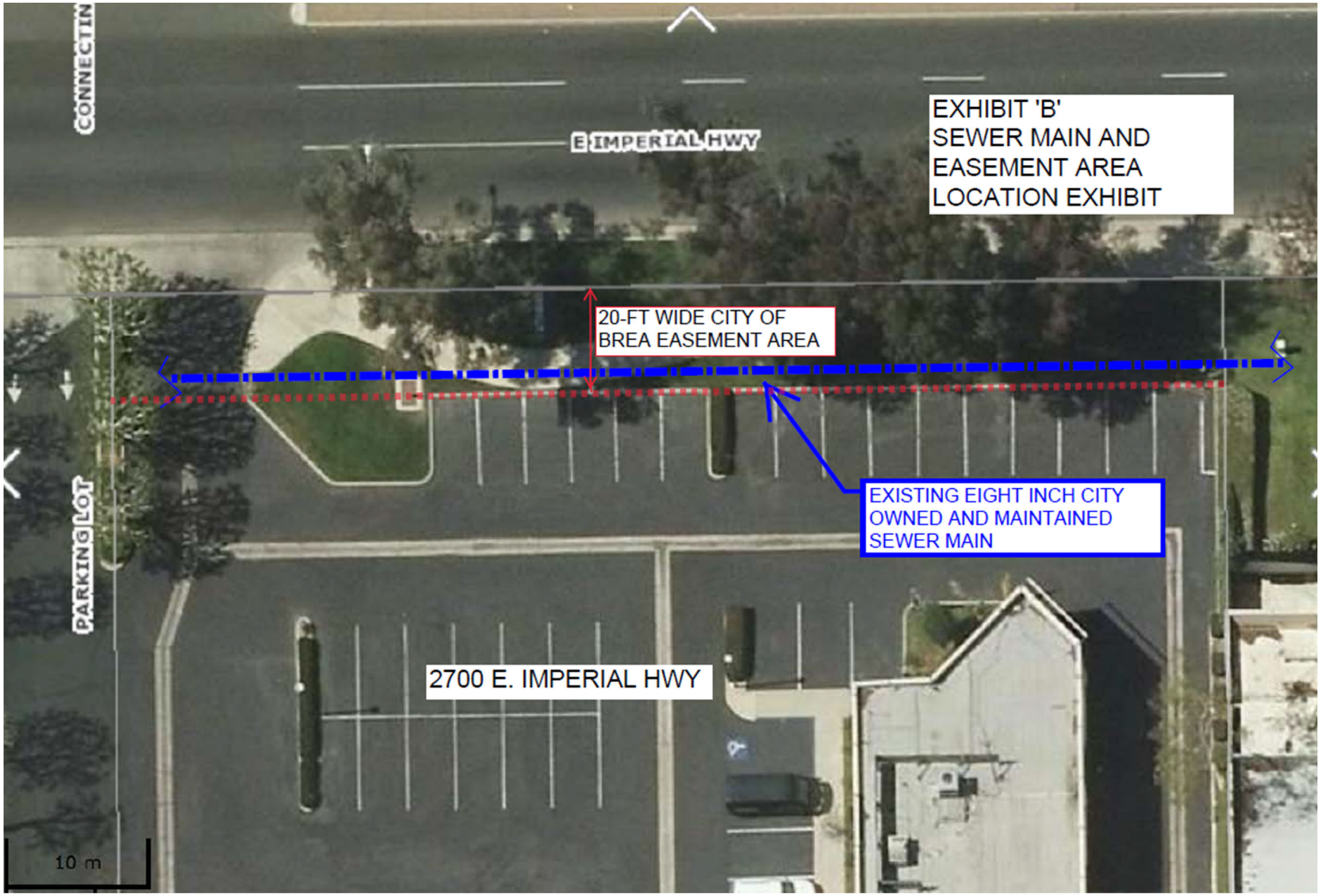
EXHIBIT 'B'
SEWER MAIN AND
EASEMENT AREA
LOCATION EXHIBIT
E IMPERIAL HWY
CONNECTIN
PARKING LOT
20-FT WIDE CITY OF
BREA EASEMENT AREA
EXISTING EIGHT INCH CITY
OWNED AND MAINTAINED
SEWER MAIN
2700 E. IMPERIAL HWY
10 m

Recording requested by:
CITY CLERK, CITY OF BREA

When recorded return to:
CITY CLERK
CITY OF BREA
1 CIVIC CENTER CIRCLE
BREA, CA 92821

SEND CONFORMED COPY TO:
SAME AS ABOVE

Free Recording requested per
Gov't Section 6103.

(Space Above For Recorder's Use)

SITE MAINTENANCE AND RESTORATION AGREEMENT

THIS SITE MAINTENANCE AND RESTORATION AGREEMENT ("Agreement") is made this 27th day of April, 2021, by and between LCG2SS Brea Storage, LLC ("Owner") and the CITY OF BREA, a municipal corporation ("City"). (Owner and City are sometimes referred to collectively herein as the "Parties").

RECITALS

A. Owner is the owner of that certain real property identified as Assessor's Parcel No. 336-631-16, and the common street address of 2700 E. Imperial Highway, City of Brea, County of Orange, State of California, as more particularly described and depicted in Exhibit "A" hereto ("Property").

B. Owner is in the process of re-developing the Property with an industrial use consisting of removing the existing building and improvements and constructing a new building and improvements ("Project").

C. City is the owner of certain nonexclusive easements over the Property for various purposes including, but not limited to, operation of a public sanitary sewer line, together with related appurtenances ("City Facilities"), all as described and depicted in Exhibit "B" attached hereto (collectively, "City Easement Areas").

D. The City Facilities are located within and under portions of the Property that have been or will be improved with landscaping, asphalt, hardscape, and certain other improvements (collectively, "Owner's Improvements"), which could interfere with the City's ability to maintain the City Facilities.

I. The Owner and City desire to set forth their respective rights and obligations with respect to the presence of the City Facilities in the Property, in this Agreement.

AGREEMENT

NOW, THEREFORE, in furtherance of the foregoing Recitals, and for good and valuable consideration, the receipt and adequacy of which are hereby acknowledged, Owner and City hereby agree as follows:

1. **Location and Description of the City Facilities**. Owner acknowledges and agrees that the City Facilities and City Easement Areas are located, comprised and described as follows:

One (1) 20-feet wide easement – eight-inch (8") diameter sewer line along the westerly property line.

The specific locations and configurations of the City Facilities are more fully depicted in Exhibit "B" attached hereto.

2. **City's Right of Entry**. Owner hereby grants to City the perpetual right to enter and use the Property as reasonably necessary, and at no cost to City, in order to maintain, repair and replace any of the City Facilities, and to exercise and enforce any other express or implied rights granted to the City by this Agreement.

3 **Maintenance and Repair of Owner's Improvements; Prohibited Improvements**. The Owner shall be solely responsible for repairing, restoring, reconstructing, and maintaining the Owner's Improvements in good, safe and undamaged condition, and in compliance with all applicable ordinances and codes. The City hereby grants to the Owner the right to enter upon the City Easement Areas from time to time for the purposes of inspecting, maintaining, repairing, and replacing, in their original locations, the Owner's Improvements, in accordance with this Agreement; provided, however, that, unless the City's written approval is first obtained, the Owner shall not: (a) enter any of the City Easement Areas while maintenance, repair, or replacement of any of the City Facilities is occurring; or (b) dig, trench, grade, or construct, install or place any unauthorized improvements within or upon any of the City Easement Areas. "Unauthorized improvements" consist of the following: trees, structures including, but not limited to, any block wall, planter, retaining wall, footing, column, or similar type permanent structures installed below grade. Unauthorized improvements do not include landscaping without trees, irrigation, and/or driveway or parking lot asphalt.

Notwithstanding the foregoing, "Unauthorized Improvements" do not include those existing, mature trees located on the southerly portion of the storm drain referenced in Section 1, above, provided, however, Owner shall be responsible for all costs incurred by the City in repairing and/or replacing any portion of said storm drain that may be damaged by such trees.

All maintenance and repair of the Owner's Improvements shall be conducted so as to avoid any interference with the City's use of the City Easement Areas.

4. **Insurance and Indemnity.** Within (10) business days of the effective date of this Agreement, and prior to any entry into any of the City Easement Areas to perform any digging, trenching, construction, maintenance or repair activity with respect to the Owner's

Improvements, the Owner shall provide the City with proof of having obtained commercial general liability insurance in a form acceptable to the City, naming the City, its elected officials, officers, employees and contractors as additional insureds ("Additional Insureds"), and waiving the right of subrogation against all of the Additional Insureds.

To the maximum extent permitted by law, Owner shall defend, indemnify and hold the Additional Insureds free and harmless with respect to any and all claims, liabilities and legal actions arising out of the acts or omissions of Owner and/or any of Owner's officers, employees, agents or contractors in the performance of rights granted, or obligations imposed, by this Agreement including, but not limited to, acts or omissions related to maintenance, repair, use or replacement of any of the Owner's Improvements.

5. **Liens and Stop Notices.** The Owner shall keep the City Easement Areas free of any liens, shall promptly remove or cause the release of any liens and/or stop notices placed thereon due to any actions of the Owner or any person or entity acting on Owner's behalf, and shall indemnify, defend and hold the City harmless with respect to any and all liability, loss and/or expense associated with any such liens or stop notices.

6. **Maintenance and Repair of the City Facilities**. The Owner acknowledges and understands that the City's maintenance and repair of the City Facilities will likely result in damage to or destruction of some or all of the Owner's Improvements. In consideration of being permitted to construct the Owner's Improvements, and/or allowing Owner's Improvements to remain within the City Easement Areas, the Owner expressly assumes all risks, and waives and releases, and agrees to defend, indemnify and hold the City and its officials, officers, employees, contractors and agents, free and harmless with respect to any and all claims, liabilities, losses, and/or causes of action asserted under any theory of recovery, arising out of or related to any damage to or destruction of the Owner's Improvements occurring as a result of the City's maintenance, replacement and/or repair of any of the City Facilities, except to the extent caused by the City's or the City's contractor's intentional misconduct or gross negligence.

Except where the public health and safety require immediate action by the City, as determined by the City's Director of Public Works, the City shall provide the Owner with at least thirty (30) days' advance written notice of the City's intent to perform any maintenance, repair or replacement of the City Facilities that will require disturbing the soil in any of the City Easement Areas. After the foregoing notice has been provided to the Owner, the City may remove any remaining Owner's Improvements, as deemed by the City Engineer to be necessary in order to access, repair and/or replace the City Facilities. After completion of such work, and unless otherwise agreed upon in writing, the City shall backfill any trenches and holes and cover any previously paved areas with temporary asphalt or other paving material deemed suitable by the City. The City shall have no obligation to remove the paving material. In the event of any damage to the Owner's Improvements, other than damage caused by the City's or the City's contractor's intentional misconduct or gross negligence, the City shall have no responsibility for such damage or to repair or replace any of the Owner's Improvements except as provided herein, and the Owner, at its cost and expense, shall be solely responsible for repairing or replacing the Owner's Improvements.

7. **Compliance With Laws**. The Owner and City shall at all times comply fully with all applicable laws, ordinances, rules, codes, regulations, and permit requirements pertaining to the use of the City Easement Areas and maintenance and repair of the City Facilities.

8. **Waiver**. The failure of either of the Parties or their successors to enforce any of the terms and provisions set forth herein shall not constitute a waiver of the right to enforce the same thereafter.

9. **Construction**. The section headings have been inserted for convenience only, and shall not be considered or referred to in resolving questions of interpretation or construction. Wherever the context hereof may so require, the singular shall include the plural and the masculine shall include the feminine and neuter.

10. **Notices**. All notices required by this Agreement shall be given in writing and shall be delivered personally, by first class mail, with postage pre-paid, or by a reputable overnight delivery service. Notices shall be considered given on the earlier of (a) receipt, if personally delivered or express mailed to the addressee, or to a partner or an officer of the addressee if the addressee is a partnership or corporation, or (b) forty-eight (48) hours following deposit in the United States mail. Notices shall be given at the following addresses:

If to City: _____

_____

_____

If to Owner: LCG2S Brea Storage, LLC
ATTN: Jake Walker
3500 Maple Avenue, Suite 1600
Dallas, TX 75219

11. **Incorporation of Exhibits**. Exhibits "A", and "B" to this Agreement are incorporated herein by this reference as if fully set forth herein.

12. **Binding on Successors; Terms Incorporated in Declaration**. The provisions of this Agreement shall run with the land and are established in accordance with Section 1468 of the California Civil Code, as same may be amended from time to time, for the benefit of and to be binding upon each of the owners of the Property and the City Easement Areas, including, without limitation, the Owner and the City, and the successors, assignees and grantees of all or any portion of the Property or interests therein affected hereby.

13. **Third Party Beneficiaries.** This Agreement is entered into for the sole benefit of the Owner and the City, and their successors, and may not be enforced by any third party.

14. **Recordation of Agreement**. Any of the Parties may cause this Agreement or a memorandum thereof to be recorded in the Office of the County Recorder of Orange County, California.

15. **Attorneys Fees.** The prevailing party in any legal action brought for breach, or to enforce any provisions of this Agreement, shall be entitled to recover its reasonable attorneys' fees and all costs of litigation.

16. **Governing Law and Venue**. The provisions of this Agreement shall be governed by and construed in accordance with the laws of the State of California, and without regard for its conflicts of laws principles. Venue for any legal action arising out of this Agreement shall be the Superior Court of the County of Orange, California.

17. **Counterpart Execution**. This Agreement may be executed in one or more counterparts, each of which shall be deemed an original, but all of which together shall constitute one and the same instrument.

IN WITNESS WHEREOF, the Parties have made and executed this Agreement on the day and year first above written.

"OWNER"

LCG2SS BREA STORAGE, LLC, a Texas limited liability company

BY: _____
Name: Jake Walker
Title: Authorized Signatory

CITY OF BREA, a municipal corporation

BY:_____

Title: _____

ATTEST:

_____
City Clerk of the City of
Brea, California

STATE OF TEXAS)
) ss.
COUNTY OF DALLAS)

On May 3rd, 2021, before me, Mariia Rich, Notary Public, personally appeared Cake Walker, who proved to me on the basis of satisfactory evidence to be the persons whose names are subscribed to the within instrument and acknowledged to me that they executed the same in their authorized capacity, and that by their signatures on the instrument the persons or the entities upon behalf of which the persons acted executed the instrument.

I certify under PENALTY OF PERJURY under the laws of the State of Texas that the foregoing paragraph is true and correct.

WITNESS my hand and official seal.

Mariia Rich
Signature of Notary Public

MARIIA RICH
Notary Public, State of Texas
Comm. Expires 06-18-2024
Notary ID 132477345

[SEAL]

EXHIBIT "A"
PROPERTY DESCRIPTION

EXHIBIT "A"
LEGAL DESCRIPTION
2700 East Imperial Highway, Brea, CA

The Land referred to herein is situated in the State of California, County of Orange, City of Brea, and described as follows:

Lot 14 of Tract No. 8675, in the City of Brea, County of Orange, State of California, as shown on a Map recorded in Book 403, Pages 37 thru 41, of Miscellaneous Maps, in the Office of the County Recorder of said County.

Excepting those portion of the subsurface which lie below a plane parallel to and 100 feet measured vertically downward below the surface of said land, without the right of surface entry thereto, as set forth in the deed from Moreland Development Company, a corporation, recorded December 29, 1977 in Book 12510, Page 1428, of Official Records.

Excepting that portion of said land lying below a depth of 500 feet measured vertically from the surface thereof, with no right of surface entry thereon, as reserved in a deed recorded June 19, 1976 in Book 11817, Page 737, of Official Records.

APN: 336-631-16

EXHIBIT "B"
DESCRIPTION OF CITY EASEMENT AREAS AND CITY FACILITIES

EXHIBIT B
2700 EAST IMPERIAL HIGHWAY, BREA, CA

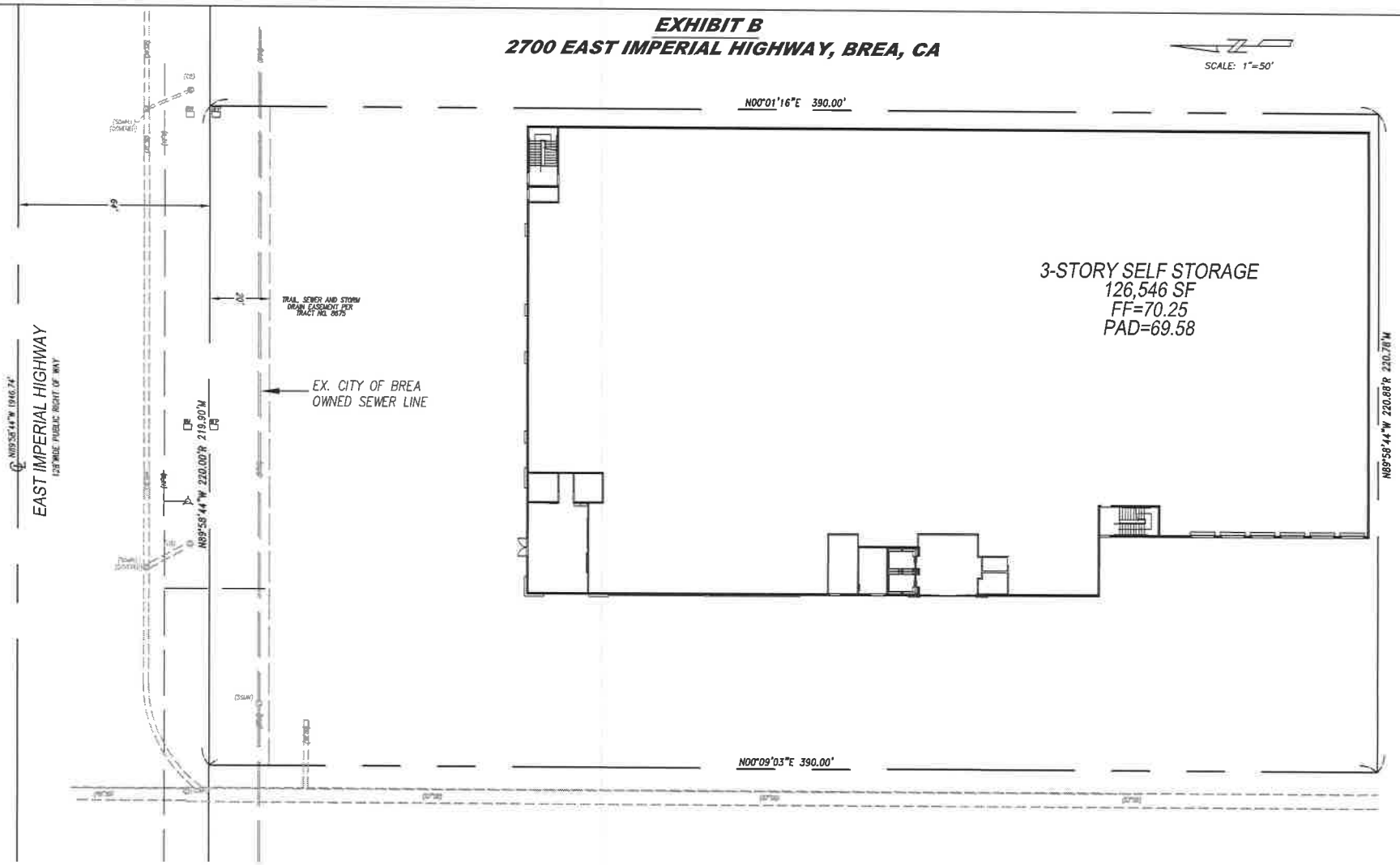

City of Brea

COUNCIL COMMUNICATION

TO: Honorable Mayor and City Council Members

FROM: Bill Gallardo, City Manager

DATE: 08/17/2021

SUBJECT: Accept Public Improvements, Authorize City Clerk to Release Improvement Bonds and Accept One-Year Warranty Bond for Tract No. 17160 for La Floresta Development Planning Area 10 Located at the Northeast Corner of Imperial Highway and Valencia Avenue.

RECOMMENDATION

1. Accept Public Improvements,
2. Authorize City Clerk to Release Improvement Bonds, and
3. Accept One-year Warranty Bond.

BACKGROUND/DISCUSSION

On June 21, 2016, City Council approved Final Tract Map 17160 ("Map") for single-family lots, Subdivision Improvement Agreement ("SIA") and Improvement Bonds for La Floresta Development Planning Area 10 ("PA10"), located at the northeast corner of Imperial Highway and Valencia Avenue. This map subdivided an approximately 18.9-acre site into ninety-six (96) single family lots, five (5) lettered lots for private streets, one (1) lettered lot for a private alley, and seventeen (17) lettered lots for landscape purposes. See attached Exhibit "A" for the site location.

The applicant, Pulte Home Corporation ("Developer") entered into the SIA and submitted Improvement Bonds (Performance and Labor Materials Bonds) in the amount of Two Million Forty-five Thousand Dollars ($2,045,000.00) for construction of the required public and private improvements. The required public improvements consisted of public water mains, public sewer mains and public storm drain mains. The required private improvements, included curb, gutter, sidewalk, driveways, street lights, and water quality treatment features.

Since approval of the Map, the Developer has completed construction of the required improvements. All construction was completed in accordance with the approved improvement plans and to the City Engineer's satisfaction. In addition, City staff has reviewed the Conditions of Approval for this development and has determined that the associated public improvements conditions have been met.

City staff is recommending that City Council accept the public improvements and release the Performance Bond. The Labor Material Bond will remain in full effect for six months and be released by the City Clerk. A One-year Warranty Bond, in the amount of Two Hundred Four Thousand Five Hundred Dollars ($204,500.00), is provided in accordance with the SIA to guarantee the work and materials for one year following the date of acceptance. The One-year

Warranty Bond will be released after the one-year warranty period if there is no warranty work remaining. Therefore, City staff is recommending that City Council accept the One-year Warranty Bond.

FISCAL IMPACT/SUMMARY

There will be no fiscal impact to the General Fund. The improvements were constructed at no cost to the City and fees for the development are current and paid. The City will be responsible for maintenance of the public improvements upon acceptance, which is covered within the Public Works annual operational budget.

The required public improvements have been completed pursuant to the SIA and a warranty bond for one year has been provided. Therefore, staff recommends the City Council accept the public improvements, release the Improvement Bonds, and accept the One-Year Warranty Bond.

RESPECTFULLY SUBMITTED:

William Gallardo, City Manager
Prepared by: Hsing Chao, Associate Engineer
Concurrence: Michael Ho, P.E. Deputy Public Works Director / City Engineer
Tony Olmos P.E., Public Works Director

Attachments

Exhibit "A" - Site Location
One-Year Warranty Bond

EXHIBIT "A"

Note: Plans shown are conceptual in nature and are provided for illustrative purposes only. Final plans will be submitted as part of the Precise Development Plan process.

N.T.S.

Exhibit 6, Illustrative Land Use Plan, La Floresta Village

DocuSign Envelope ID: EE9BCA87-2B7F-4E80-90AF-D6C1B24CA607

1 Year Warranty Bond

Bond No. 0238773

Initial Premium $818

WHEREAS, The City Council of the CITY OF BREA, State of California, and Pulte Home Company, a Michigan Limited Liability Company ("Principal" hereinafter) have entered into an agreement whereby Principal agrees to install and complete certain designated public improvements, which said agreement, dated **June 21, 2016**, and identified as project **La Floresta Planning Area 10 – Tract 17160** is hereby referred to and made a part hereof: and

WHEREAS, said Principal is required under the terms of said agreement to furnish a bond to guarantee and warranty the work for a one (1) year period following acceptance thereof against any defective work or labor done or defective material furnished;

NOW, THEREFORE, we the Principal and Berkley Insurance Company, as surety are held and firmly bound unto the CITY OF BREA ("City" hereinafter), in the penal sum of **TWO HUNDRED FOUR THOUSAND FIVE HUNDRED DOLLARS ($204,500.00)** lawful money of the United States, for the payment of which sum well and truly to be made, we bond ourselves, our heirs, successors, executors and administrators, jointly and severally, firmly by these presents.

The condition of this obligation is such that if the above bound Principal, his or its heirs, executors, administrators, successors or assigns, shall in all things stand to and abide by, and well and truly keep and perform the covenants, conditions, and provisions in the said agreement and any alteration thereof made as therein provided, on his or their part, to be kept and performed at the time and in the manner therein specified, and in all respect according to their true intent and meaning, and shall indemnify and save harmless City, it officers, agents and employees, as therein stipulated then this obligation shall become null and void; otherwise it shall be and remain in full force and effect.

As a part of the obligation secured hereby and in addition to the face amount specified thereof, there shall be included costs and reasonable expenses and fees, including reasonable attorneys' fees, incurred by City in successfully enforcing such obligation, all to be taxed as costs and included in any judgment rendered.

The surety hereby stipulates and agrees that no change, extension of time, alteration or addition to the terms of the agreement or to the work to be performed thereunder or the specifications accompanying the same shall in anywise affect its obligations on this bond, and it does hereby waive notice of any such change, extension of time, alteration or addition to the terms of the agreement or to the work or to the specifications.

IN WITNESS WHEREOF, this instrument has been duly executed by the Principal and surety above named, on May 6th, 20 21.

Principal: Pulte Home Company, LLC, a Michigan Limited Liability Company	**Surety:** Berkley Insurance Company
By: see attached	**By:**
D. Bryce Langen, VP & Treasurer	Jeremy Polk, Attorney-in-Fact
Address: 27401 Los Altos, Suite 400 Mission Viejo, CA 92691	**Address** 11201 Douglas Avenue Urbandale, IA 50322
Phone No.: 949-330-8537	**Phone No.:** 515-473-3277

executed this 6th day of May, 2021.

Pulte Home Company, LLC
a Michigan limited liability company

PRINCIPAL

BY: D. Bryce Langen, VP & Treasurer

Notary Attached

ACKNOWLEDGEMENT

State of Arizona

County of Maricopa

*On 5/4/2021 before me personally appeared **Jeremy Polk** whose identity was proven to me on the basis of satisfactory evidence to be the person who he or she claims to be, and acknowledged that he or she signed the attached document.*

(Seal)

Matthew Stanton Erra
Notary Public
Maricopa County, Arizona
My Comm. Expires 03-09-22
Commission No. 543674

Notary Signature

Matthew Stanton Erra
Commission Expires March 9th, 2022

No. BI-7991f-el

POWER OF ATTORNEY
BERKLEY INSURANCE COMPANY
WILMINGTON, DELAWARE

NOTICE: The warning found elsewhere in this Power of Attorney affects the validity thereof. Please review carefully.

KNOW ALL MEN BY THESE PRESENTS, that BERKLEY INSURANCE COMPANY (the "Company"), a corporation duly organized and existing under the laws of the State of Delaware, having its principal office in Greenwich, CT, has made, constituted and appointed, and does by these presents make, constitute and appoint: ***Jeremy R. Polk of USI Insurance Services, LLC of Phoenix, AZ*** its true and lawful Attorney-in-Fact, to sign its name as surety only as delineated below and to execute, seal, acknowledge and deliver any and all bonds and undertakings, with the exception of Financial Guaranty Insurance, providing that no single obligation shall exceed **Fifty Million and 00/100 U.S. Dollars (U.S.$50,000,000.00),** to the same extent as if such bonds had been duly executed and acknowledged by the regularly elected officers of the Company at its principal office in their own proper persons.

This Power of Attorney shall be construed and enforced in accordance with, and governed by, the laws of the State of Delaware, without giving effect to the principles of conflicts of laws thereof. This Power of Attorney is granted pursuant to the following resolutions which were duly and validly adopted at a meeting of the Board of Directors of the Company held on January 25, 2010:

RESOLVED, that, with respect to the Surety business written by Berkley Surety, the Chairman of the Board, Chief Executive Officer, President or any Vice President of the Company, in conjunction with the Secretary or any Assistant Secretary are hereby authorized to execute powers of attorney authorizing and qualifying the attorney-in-fact named therein to execute bonds, undertakings, recognizances, or other suretyship obligations on behalf of the Company, and to affix the corporate seal of the Company to powers of attorney executed pursuant hereto; and said officers may remove any such attorney-in-fact and revoke any power of attorney previously granted; and further

RESOLVED, that such power of attorney limits the acts of those named therein to the bonds, undertakings, recognizances, or other suretyship obligations specifically named therein, and they have no authority to bind the Company except in the manner and to the extent therein stated; and further

RESOLVED, that such power of attorney revokes all previous powers issued on behalf of the attorney-in-fact named; and further

RESOLVED, that the signature of any authorized officer and the seal of the Company may be affixed by facsimile to any power of attorney or certification thereof authorizing the execution and delivery of any bond, undertaking, recognizance, or other suretyship obligation of the Company; and such signature and seal when so used shall have the same force and effect as though manually affixed. The Company may continue to use for the purposes herein stated the facsimile signature of any person or persons who shall have been such officer or officers of the Company, notwithstanding the fact that they may have ceased to be such at the time when such instruments shall be issued.

IN WITNESS WHEREOF, the Company has caused these presents to be signed and attested by its appropriate officers and its corporate seal hereunto affixed this 15th day of January, 2021.

BERKLEY INSURANCE COMPANY CORPORATE SEAL 1975 DELAWARE

Attest:

By _____
Ira S. Lederman
Executive Vice President & Secretary

Berkley Insurance Company

By _____
Jeffrey M. Hafter
Senior Vice President

STATE OF CONNECTICUT)
) ss:
COUNTY OF FAIRFIELD)

Sworn to before me, a Notary Public in the State of Connecticut, this 15th day of January, 2021, by Ira S. Lederman and Jeffrey M. Hafter who are sworn to me to be the Executive Vice President and Secretary, and the Senior Vice President, respectively, of Berkley Insurance Company.

MARIA C RUNDBAKEN
NOTARY PUBLIC
CONNECTICUT
MY COMMISSION EXPIRES
APRIL 30, 2024

_____
Notary Public, State of Connecticut

CERTIFICATE

I, the undersigned, Assistant Secretary of BERKLEY INSURANCE COMPANY, DO HEREBY CERTIFY that the foregoing is a true, correct and complete copy of the original Power of Attorney; that said Power of Attorney has not been revoked or rescinded and that the authority of the Attorney-in-Fact set forth therein, who executed the bond or undertaking to which this Power of Attorney is attached, is in full force and effect as of this date.

BERKLEY INSURANCE COMPANY CORPORATE SEAL 1976 DELAWARE

Given under my hand and seal of the Company, this 6th day of May, 2021.

_____
Vincent P. Forte

ACKNOWLEDGEMENT BY PRINCIPAL

STATE OF GEORGIA)

) ss.

COUNTY OF FULTON)

This record was acknowledged before me on May 6th, 2021, appeared D. Bryce Langen, VP & Treasurer of Pulte Home Company, LLC, a Michigan limited liability company, who provided to me on the basis of satisfactory evidence to be the person who appeared before me and is personally known to me.

WITNESS my hand official seal.

Signature of Notary Public

SHIRLEY E HUTCHINS
Notary Public – State of Georgia
Fulton County
My Commission Expires Mar 18, 2022

Shirley E. Hutchins
Notary Public State of Georgia
My Commission Expires: March 18, 2022

City of Brea

COUNCIL COMMUNICATION

TO: Honorable Mayor and City Council Members

FROM: Bill Gallardo, City Manager

DATE: 08/17/2021

SUBJECT: Mutual Aid Agreement for COVID-19 Vaccination Effort with the County of Orange

RECOMMENDATION

Approve Mutual Aid Memorandum of Agreement (AGREEMENT) and Resolution No. 2021-051 between County of Orange and City of Brea.

BACKGROUND/DISCUSSION

COVID-19 is a world-wide pandemic resulting in significant health and economic impacts across the globe. On February 25, 2020, the United States Centers for Disease Control and Prevention (CDC) announced that community spread of the novel coronavirus (COVID-19) was likely. On February 26, 2020, the Orange County Health Officer declared a Health Emergency. On February 26, 2020, the Chair of the Emergency Management Council issued a Proclamation of Local Emergency pursuant to the requirements of the California Emergency Services Act, which was ratified by the Board of Supervisors on March 2, 2020.

On March 4, 2020, the Governor of the State of California proclaimed a state of emergency in response to the COVID-19 pandemic pursuant to the California Emergency Services Act.

On March 13, 2020, the President of the United States issued a Major Disaster Declaration for California (FEMA-4482-DR-CA) in response to the COVID-19 pandemic pursuant to section 501 (b) of the Robert T. Stafford Disaster Relief and Emergency Assistance Act, 42 U.S.C. 5121-5207 (the “Stafford Act”). This action made the State of California, local and Indian tribal governments, and certain private non-profit (PNP) organizations eligible to apply for reimbursement from Federal Emergency Management Agency (FEMA) Public Assistance (PA) Program.

On December 31, 2020, the County of Orange (County) launched Operation Independence with the goal of facilitating the vaccination of all willing community members by July 4, 2021. To accomplish this, an Incident Management Team was assigned to lead the organization of mass vaccination sites, known as Points of Dispensing (PODs). Because the PODs provide mutual benefit to all community members across the County, regardless of the City they live or work in, staffing support of the PODs is requested of local jurisdictions. Staffing goals for each jurisdiction are set based upon the proportion of community members living in their jurisdiction.

To reimburse cities, mutual aid agreements are required between the County and each requesting jurisdiction. The County Board of Supervisors approved the standard Mutual Aid Memorandum of Agreement (MOA) on March 9, 2021. A revised MOA was approved by the

Board of Supervisors on July 27, 2021 (Attachment A).

The City of Brea City Council is requested to approve the Agreement, without changes, and authorize by Resolution (Attachment B), the City Manager or designee to execute any actions necessary for the purposes of obtaining federal financial assistance related to this Agreement, if those actions do not materially change the terms or amount of the City of Brea's commitment as it is reflected in the above-referenced AGREEMENT.

FISCAL IMPACT/SUMMARY

This Agreement may allow the City of Brea to receive reimbursement for costs associated with staffing the Vaccination PODs.

RESPECTFULLY SUBMITTED:

William Gallardo, City Manager
Prepared by: Lisa Keyworth, Emergency Preparedness Analyst
Concurrence: Adam Loeser, Fire Chief

Attachments

Resolution for MOA with Orange County
Mutual Aid Agreement for COVID PODs

RESOLUTION NO. XXX

A RESOLUTION OF THE BREA CITY COUNCIL APPROVING A MUTUAL AID AGREEMENT WITH THE COUNTY OF ORANGE FOR THE COVID-19 VACCINATION EFFORT

A. RECITALS:

(i) The County of Orange ("County") has implemented a program to vaccinate all eligible community members free of charge to curtail the impacts of COVID-19 on residents throughout the County.

(ii) The County is seeking resources from mutual aid partners to ensure the safe, expeditious, and effective operation of the program's vaccination sites.

(iii) The City of Brea will promote the public health, safety, and welfare by assisting this County program.

(iv) All legal prerequisites to the adoption of this Resolution have occurred.

B. RESOLUTION:

NOW, THEREFORE, it is found, determined and resolved by the Brea City Council as follows:

1. The facts as set forth in the Recitals are true and correct.

2. The City Council approves the Mutual Aid Agreement with the County of Orange for the COVID-19 Vaccination Effort as set forth in the agenda materials considered at the Council's August 17, 2021 regular meeting. The City Manager is authorized and directed to execute such agreement on behalf of the City subject to any clerical revisions deemed necessary or appropriate by the City Attorney.

3. The City Clerk shall certify to the passage and adoption of this Resolution.

APPROVED AND ADOPTED this 17th day of August, 2021.

_____
Steven Vargas, Mayor

ATTEST: _____
Lillian Harris-Neal, City Clerk

I, Lillian Harris-Neal, City Clerk of the City of Brea, do hereby certify that the foregoing Resolution was adopted at a meeting of the City Council of the City of Brea held on the 17th day of August, 2021, by the following vote:

AYES: COUNCIL MEMBERS:

NOES: COUNCIL MEMBERS:

ABSENT: COUNCIL MEMBERS:

ABSTAIN: COUNCIL MEMBERS:

DATED: _____

_____
City Clerk

MUTUAL AID AGREEMENT
for the
COVID-19 Vaccination Effort

This Mutual Aid Agreement ("AGREEMENT") between the County of Orange, a political subdivision of the State of California, ("COUNTY" or "LEAD AGENCY") and ___City of Brea____ ("MUTUAL AID PARTNER" or "PROVIDING JURISDICTION") pertaining to mutual aid assistance provided under the Orange County Operational Area Agreement ("OAA") is made and entered into as of August 17, 2021. COUNTY and MUTUAL AID PARTNER are individually referred to as "PARTY" and collectively referred to as "PARTIES."

NOTE: Use of such an agreement does not guarantee state or federal reimbursement.

WHEREAS, this event and associated conditions will collectively be referred to as the Novel Coronavirus COVID-19 Vaccination Effort ("COVID-19 Vaccination Effort"); and

WHEREAS, COVID-19 is a world-wide pandemic resulting in significant health and economic impacts across the globe;

WHEREAS, on February 26, 2020, the Orange County Health Officer declared a Health Emergency;

WHEREAS, on February 26, 2020, the Chair of the Emergency Management Council issued a Proclamation of Local Emergency pursuant to the requirements of the California Emergency Services Act, which was ratified by the Board of Supervisors on March 2, 2020;

WHEREAS, on March 4, 2020, the Governor of the State of California proclaimed a state of emergency in response to the COVID-19 pandemic pursuant to the California Emergency Services Act;

WHEREAS, on March 13, 2020, the President of the United States issued a Major Disaster Declaration for California (FEMA-4482-DR-CA) in response to the COVID-19 pandemic pursuant to section 501 (b) of the Robert T. Stafford Disaster Relief and Emergency Assistance Act, 42 U.S.C. 5121-5207 (the "Stafford Act"). This action made the State of California, local and Indian tribal governments and certain private non-profit (PNP) organizations eligible to apply for reimbursement from the Federal Emergency Management Agency (FEMA) Public Assistance (PA) Program[1].

WHEREAS, the COUNTY has implemented a vaccination effort ("COVID-19 Vaccination Effort") intended to vaccinate all eligible community members free-of-charge to curtail the impacts of COVID-19 on residents throughout the County;

[1] See https://www.fema.gov/assistance/public/program-overview for more information.

WHEREAS, residents in County unincorporated areas and those residing within the boundaries of incorporated cities within the County of Orange are equally impacted by COVID-19 and will equally benefit from receipt of COVID-19 vaccinations;

WHEREAS, implementation of the COVID-19 Vaccination Effort is an intensive effort requiring significant resources and coordination across jurisdictions on a day-to-day basis;

WHEREAS, the County formed the Operation Independence Incident Management Team (IMT) to coordinate the planning and operation of COVID-19 regional vaccination sites and mobile clinics, including all staffing scheduling and obtaining services and supplies, equipment and facilities.

WHEREAS, COUNTY is seeking resources including but not limited to staffing, services and supplies, equipment and facilities to ensure the safe, expeditious and effective operation of COVID-19 Vaccination Effort vaccination sites;

WHEREAS, MUTUAL AID PARTNER is interested in providing staff to assist in the COVID-19 Vaccination Effort;

WHEREAS, COUNTY and MUTUAL AID PARTNER wish to clarify the terms by which Mutual Aid assistance and reimbursement will be provided by the Parties in implementing the COVID-19 Vaccination Effort;

WHEREAS, COUNTY and MUTUAL AID PARTNER are members of the Orange County Operational Area (OA) for the coordination of Mutual Aid Emergency Response as provided for under the California Emergency Services Act. The Orange County Operational Area Agreement describes the cooperative and mutual handling of duties and responsibilities within Orange County related to disaster preparedness, response and recovery, including the coordination of the emergency functions of the Operational Area with all other public agencies, corporations, organizations, and affected private persons within the Operational Area;

NOW, THEREFORE, COUNTY and MUTUAL AID PARTNER agree to the following terms to guide their dealings as they pertain to participation in the COVID-19 Vaccination Effort.

A. Limitation of Liability

1. Indemnification

i. By MUTUAL AID PARTNER: MUTUAL AID PARTNER agrees to indemnify, defend with counsel approved in writing by COUNTY, and hold COUNTY, its elected and appointed officials, officers, employees, agents and those special districts and agencies which COUNTY'S Board of Supervisors acts as the governing Board ("COUNTY Indemnitees") harmless from any claims, demands or liability of any kind or nature, including but not limited to personal injury or property damage, arising from or related to the services, products or other performance provided by MUTUAL AID PARTNER pursuant to this Agreement. If judgment is entered against MUTUAL AID PARTNER and COUNTY by a court

of competent jurisdiction because of the concurrent active negligence of COUNTY or COUNTY Indemnitees, MUTUAL AID PARTNER and COUNTY agree that liability will be apportioned as determined by the court. Neither PARTY shall request a jury apportionment.

ii. By COUNTY: COUNTY agrees to indemnify MUTUAL AID PARTNER, and hold MUTUAL AID PARTNER, its elected and appointed officials, officers, employees, agents and those special districts and agencies which COUNTY's Board of Supervisors acts as the governing Board ("MUTUAL AID PARTNER Indemnitees") harmless from any claims, demands or liability of any kind or nature, including but not limited to personal injury or property damage, arising from or related to the services, products or other performance provided by COUNTY pursuant to this Agreement. If judgment is entered against COUNTY and MUTUAL AID PARTNER by a court of competent jurisdiction because of the concurrent active negligence of MUTUAL AID PARTNER or MUTUAL AID PARTNER Indemnitees, COUNTY and MUTUAL AID PARTNER agree that liability will be apportioned as determined by the court. Neither PARTY shall request a jury apportionment.

2. Waiver of Claims

i. Each PARTY hereto agrees to waive all claims against all other PARTIES hereto for any loss, damage, personal injury or death occurring in consequence of the performance of this Mutual Aid Agreement; provided, however, that such claim is not a result of gross negligence or willful misconduct by a PARTY hereto or its personnel.

ii. Each PARTY to this Agreement waives all claims against all other PARTIES to this Agreement for compensation for any loss, damage, personal injury, or death occurring to personnel and/or equipment as a consequence of the performance of this agreement.

3. Governmental Immunity:

To the fullest extent authorized by law, all activities performed under this agreement are deemed to be governmental functions. Neither COUNTY or MUTUAL AID PARTNER, nor their employees, except in cases of willful misconduct, gross negligence, or bad faith shall be liable for the death of or injury to persons, or for damage to property when complying or attempting to comply with this Agreement.

4. Insurance:

i. Each PARTY shall be responsible for providing insurance for its own employees and representatives.

ii. Claims for injuries incurred while participating in the COVID-19 Vaccination Effort will be submitted under the Workers Compensation policy of the injured PARTY's employer. (i.e.,

COUNTY employees/volunteers will submit under the COUNTY's policy and MUTUAL AID PARTNER employees/volunteers will submit under the MUTUAL AID PARTNER's policy.)

B. Billing and Reimbursement

1. Reimbursement Rules

Regardless of the source of funds by which Vaccination Effort Reimbursement Requests are reimbursed, the PARTIES agree for the sake of consistency and accuracy:

i. To abide by the principles set forth in the Robert T. Stafford Disaster Relief and Emergency Assistance Act, as Amended (Stafford Act), Title 42 of the United States Code (U.S.C.) § 5121 et seq.; Title 44 of the Code of Federal Regulations (C.F.R.), Part 206; and 2 C.F.R., Part 200, Uniform Administrative Requirements, Cost Principles, and Audit Requirements for Federal Awards.

ii. To be guided by the concepts outlined within FEMA Public Assistance Program and Policy Guide (Exhibit 2).

iii. To be further guided by COVID-19-specific response and recovery guidance issued by federal and state agencies related to vaccination efforts.

2. MUTUAL AID PARTNER Responsibilities:

i. Submit Vaccination Effort Reimbursement Requests to COUNTY at a minimum of once every 30 days according to schedule provided by COUNTY.

ii. Submit all Vaccination Effort Reimbursement Requests in the format attached to this Agreement (Exhibit 1) or as otherwise may be required by the COUNTY for services rendered by MUTUAL AID PARTNER representatives. Failure to submit timely Vaccination Effort Reimbursement Requests in the recommended format may result in a denial of reimbursement and require resubmittal of Request.

iii. Ensure that, for each Vaccination Effort Reimbursement Request submitted, all COVID-19 Vaccination Effort direct labor expenditures (includes labor burden and excludes overhead) are documented and certified by the MUTUAL AID PARTNER to be in compliance with COUNTY requirements.

iv. Ensure that for each Vaccination Effort Reimbursement Request submitted, all personnel resources are reconciled with COUNTY vaccination site personnel records.

v. Exclude from each Vaccination Effort Reimbursement Request incidental expenditures such as mileage, meals, lodging, etc.

vi. Provide any additional documentation requested by COUNTY in support of the MUTUAL AID PARTNER's Vaccination Effort Reimbursement Request.

vii. Maintain records for audit, as described within the FEMA Public Assistance Program and Policy Guide (Exhibit 2). MUTUAL AID PARTNER shall make records available for inspection upon request of the COUNTY.

viii. Remedy any audit finding related to Vaccination Effort Reimbursement Requests, including any audit finding identified under the Improper Payments Elimination and Recovery Improvement Act (IPERIA).

ix. MUTUAL AID PARTNER agrees to provide sufficient documentation, as defined by the COUNTY, to ensure adequate validation of costs for reimbursement. As necessary during this public health crisis, MUTUAL AID PARTNER will assist with the COVID-19 Vaccination Effort and ensure that cost documentation is submitted to the COUNTY for review and verification to ensure County has complete cost documentation to support County reimbursement requests.

3. COUNTY Responsibilities

i. Conduct an initial review for completeness of MUTUAL AID PARTNER Vaccination Effort Reimbursement Request and supporting documentation for consistency with Reimbursement Rules (Section B.1 herein).

ii. Submit MUTUAL AID PARTNER Vaccination Effort Reimbursement Request to third party reimbursement funding grantors within 30 days of receipt of complete request, including backup documentation, from MUTUAL AID PARTNER.

iii. Monitor the status of the MUTUAL AID PARTNER Vaccination Effort Reimbursement Request and inform the MUTUAL AID PARTNER of progress.

iv. Work with MUTUAL AID PARTNER to resolve any issues with Vaccination Effort Reimbursement Requests.

v. Reimburse MUTUAL AID PARTNER when the COUNTY has determined that sufficient documentation has been received and reimbursement funds are available.

vi. In response to auditing or monitoring requests made by third party reimbursement funding grantors, COUNTY will work with MUTUAL AID PARTNER to ensure adequate documentation is gathered to effectively respond to requests for information.

4. Modifications

   This agreement is subject to program modifications that may be made to Reimbursement Rules by state and federal legislative and regulatory authorities.

C. Disputes

   Any controversy or claim between the PARTIES arising out of or relating to this Agreement, or the breach thereof, shall be settled by arbitration in accordance with the Rules of the American Arbitration Association and judgment on the award rendered by the arbitrator(s) may be entered in any court having jurisdiction thereof.

D. Termination

   Any PARTY may withdraw from this Agreement upon 30 days written notice.

MUTUAL AID PARTNER:

By _____
(Signature)
Name: Bill Gallardo
Title: City Manager
Agency: City of Brea
Date: August 17, 2021

COUNTY OF ORANGE

By _____
(Signature)
Name:
Title:
Date:

City of Brea

COUNCIL COMMUNICATION

TO: Honorable Mayor and City Council Members

FROM: Bill Gallardo, City Manager

DATE: 08/17/2021

SUBJECT: Software/Hardware Maintenance Support and Online Subscription Service Agreements

RECOMMENDATION

1. Authorize the Purchasing Agent to approve renewal agreements with various support services providers for the life of the computer software or hardware and for online software subscription services; and
2. Authorize the Purchasing Agent to issue purchase orders for these renewal agreements that do not to exceed available budget appropriations.

BACKGROUND/DISCUSSION

To help ensure the functionality of Brea's network infrastructure, servers, and personal computers, the City uses computer hardware/software maintenance and support agreements and online vendor-hosted software subscription services for required updates, technical support, and software customizations.

Currently, there are three agreements that exceed the Purchasing Agent's $25,000 approval authority. These agreements have fixed annual increases and are not subject to negotiation.

Vendor	Description
Motorola Solutions	CAD/RMS software for the police dispatch and record management system. Current support cost of $86,938.43.
CentralSquare	City's financial software system. Current support cost of $62,498.02

Staff requests that Council authorize the Purchasing Agent to approve the one year renewal of the existing software/hardware maintenance support and online service agreements without having to return to the City Council for approval of each agreement that exceeds $25,000. The Purchasing Agent will continue to submit periodic reports to the Finance Committee of any agreements approved under this authorization.

Any award recommendations of new software systems and the initial software support agreements that exceed the formal procurement threshold, will continue to be presented to the City Council for their review and consideration.

COMMISSION/COMMITTEE RECOMMENDATION

The Finance Committee reviewed staff's recommendation at their August 10, 2021 meeting and it was recommended for City Council approval.

FISCAL IMPACT/SUMMARY

The City Council adopted Fiscal Year 2021-22 Budget has sufficient funding available for these purchases. There is no additional fiscal impact based on this action.

RESPECTFULLY SUBMITTED:

William Gallardo, City Manager
Prepared by: Neil Groom, Procurement and Contracts Administrator
Concurrence: Cindy Russell, Administrative Services Director and
Randy Hornsby, IT Manager

City of Brea

COUNCIL COMMUNICATION

TO: Honorable Mayor and City Council Members

FROM: Bill Gallardo, City Manager

DATE: 08/17/2021

SUBJECT: Purchase of new Taser 7 CEW Devices for Police Department

RECOMMENDATION

Approve the purchase of sixty-five Taser 7 CEW devices and related accessories from Axon Enterprises, Inc. for $173,142.83.

BACKGROUND/DISCUSSION

The Police Department issues and uses Taser conducted energy weapons (CEWs) from Axon. In preparation for the FY 2021-22 budget, the Police Department submitted a Decision Package to purchase sixty-five new Taser 7 CEW devices. The Decision Package was approved as part of budget adoption.

Axon Enterprises, Inc. advised that these devices and accessories are on limited distribution, and are available only from Axon directly or from ProForce Law Enforcement (see attached limited distribution letter). Axon provided a quote (attached) for the purchase of the 65 Taser CEWs and related accessories for $173,142.83 including tax and freight. The Police Department sought and received a quote from ProForce for the same items at the price of $180,193.88. Additionally, Axon provided another quote for approximately $188,000, which was based on cooperative pricing through the League of Oregon Cities.

Since Axon Enterprises quote for $173,142.83 was the lowest, award is recommended accordingly.

COMMISSION/COMMITTEE RECOMMENDATION

The Finance Committee reviewed staff's recommendation at their August 10, 2021 meeting and recommended for Council approval.

FISCAL IMPACT/SUMMARY

During budget preparations, the Revenue & Budget Division allocated $174,523 for this purchase in account 172-21-2141-4639.

RESPECTFULLY SUBMITTED:

William Gallardo, City Manager
Prepared by: Christopher Harvey, Police Lieutenant
Concurrence: Adam Hawley, Police Chief

Attachments

Decision Package
Axon Taser Limited Distribution Letter
Quote from Axon
Quote from ProForce

FY 2021-22 DECISION PACKAGE

Department: **Police Services**

Division: **Uniform/Patrol**

Request: **Purchase New Taser 7 CEW (Conducted Electrical Weapon)**

The Police Department currently issues Taser X26P Conducted Electrical Weapons ("CEW") to sworn personnel. The last Tasers purchased was in November 2015 when the department switched from the Taser X26 to the Taser X26P. All Taser CEW's have a 5-year unlimited warranty. The 5-year unlimited warranty on the department's current inventory expired in November 2020. The Brea Police Department currently has 65 Taser X26P's. Taser states that their products are designed to last for five years and they cannot guarantee their performance beyond the 5-year time frame. The department is requesting to replace our current inventory of Taser X26P's with the new and improved Taser 7.

The current Taser X26P requires a specific battery pack that is not rechargeable and costs $55 each. Each battery pack lasts approximately 6-8 months with normal usage. The average cost to replace the batteries for the Taser units in service is approximately $4,900 per year. Taser releases periodic firmware updates that improve the performance of the Taser units and these firmware updates must be installed manually by the department's Taser Instructors. The Taser X26P is only capable of holding and deploying one Taser cartridge at a time. When the Taser X26P is deployed in the field, a Taser Instructor must download the memory log from the Taser X26P that was deployed.

The new and improved Taser 7 is equipped with a rechargeable battery. The battery pack is placed in a specific charging bank that is connected to the internet. The battery pack updates the Taser 7 with new firmware automatically and transfers the memory logs to a website where they can be viewed by Taser Instructors. The Taser 7 holds two Taser cartridges and the user can select which Taser cartridge to deploy. Taser offers a close-range cartridge and a standoff cartridge option for the Taser 7, which is not available for the Taser X26P. The Taser 7 darts are improved as well. They have twice the kinetic energy and spool out wire instead of emptying out all the wire when the dart is fired.

The total cost to replace the current 65 Taser X26P's with brand new Taser 7's is $174,483. This also includes 390 cartridges (six cartridges per Taser), 12 inert training cartridges, a Taser 7 battery dock, rechargeable Taser 7 batteries, Taser 7 holsters, and a Taser 7 training target. The Police Department will receive a $12,513 trade in value for the current Taser X26P's. The trade-in brings the total cost for the Taser 7 to $161,970. With sales tax of 7.75%, the total cost is $174,523.

This request is recommended to be funded by the Public Safety Augmentation Fund (172) which is restricted for use for public safety services. There is no General Fund impact.

Fiscal Impact

	Fund/Dept/Program No	FY 2021-22	*Ongoing*
Salary/Benefits		**$ 0**	*$ 0*
Services/Supplies		**0**	*0*
Capital Outlay	172 21 2141 4639	**174,523**	*0*
Subtotal		**$ 174,523**	*$ 0*
Offset		**0**	*0*
Total		**$ 174,523**	*$ 0*

17800 N. 85th St. * Scottsdale, Arizona * 85255 * 1-480-991-0797 * Fax 1-480-991-0791 * www.axon.com

July 1, 2021

To: Brea Police Department

Re: Dual Source Letter for Axon Enterprise, Inc.'s Energy Weapons

The following goods and services required to satisfy the agency's needs are only manufactured by Axon Enterprise (Axon) and are only available for purchase through Axon or the authorized distributor listed below.

TASER Energy Weapon Descriptions

TASER 7 CEW

- Multiple-shot CEW
- High-efficiency flashlight
- Close Quarter and Standoff cartridges
- Green LASER and dual red LASERs that adjust for cartridge angle
- Arc switch enables drive-stun with or without a TASER 7 Cartridge installed
- Central Information Display (CID): Displays mission critical data such as remaining battery energy, burst time, and cartridge status.
- Weapon logs
- TASER 7 Dock connected to Axon Evidence (Evidence.com) services
- Onboard self-diagnostic and system status monitoring and reporting
- Real-time clock updated when the battery pack is plugged into the TASER 7 Dock
- Ambidextrous safety switch
- Can be configured by the agency to alert Axon camera systems
- The trigger activates a single cycle (approximately five seconds). Holding the trigger down will continue the discharge beyond the standard cycle (unless configured by the agency to stop at five seconds). The CEW cycle can be stopped by placing the safety switch in the down (SAFE) position.
- Compatible with TASER 7 Cartridges only

TASER 7 CQ Energy Weapon

- Multiple-shot CEW for agencies that deploy CEWs mostly at close quarters (CQ)
- High-efficiency flashlight
- Close Quarter cartridges
- Arc switch enables drive-stun with or without a TASER 7 Cartridge installed
- Central Information Display (CID): Displays mission critical data such as remaining battery energy, burst time, and cartridge status.
- Weapon logs
- TASER 7 Dock connected to Axon Evidence (Evidence.com) services
- Onboard self-diagnostic and system status monitoring and reporting
- Real-time clock updated when the battery pack is plugged into the TASER 7 Dock
- Ambidextrous safety switch
- Can be configured by the agency to alert Axon camera systems
- The trigger activates a single cycle (approximately five seconds). Holding the trigger down will continue the discharge beyond the standard cycle (unless configured by the agency to stop at five seconds). The CEW cycle can be stopped by placing the safety switch in the down (SAFE) position.
- Compatible with 12-degree TASER 7 Cartridges only

X2 Energy Weapon

- Multiple-shot CEW
- High efficiency flashlight

- Static dual LASERs (used for target acquisition)
- ARC switch enables drive-stun with or without a Smart Cartridge installed
- Central Information Display (CID): Displays mission-critical data such as remaining battery energy, burst time, operating mode, and user menu to change settings and view data on a yellow-on-black display
- The Trilogy log system records information from a variety of sensors into three data logs: Event log, Pulse log, and Engineering log. Data can be downloaded using a universal serial bus (USB) data interface module connected to a personal computer (PC). Data may be transferred to Evidence.com services.
- Real-time clock with back-up battery
- Onboard self-diagnostic and system status monitoring and reporting
- Ambidextrous safety switch
- Capable of audio/video recording with optional TASER CAM HD recorder
- The trigger activates a single cycle (approximately 5 seconds). Holding the trigger down will continue the discharge beyond the standard cycle (except when used with an APPM or TASER CAM HD AS). The CEW cycle can be stopped by placing the safety switch in the down (SAFE) position.
- Compatible with TASER Smart Cartridges only

X26P Energy Weapon

- High efficiency flashlight
- Red LASER (used for target acquisition)
- Central Information Display (CID): Displays data such as calculated remaining energy, burst time, and notifications
- The Trilogy log system records information from a variety of sensors into three data logs: Event log, Pulse log, and Engineering log. Data can be downloaded using a universal serial bus (USB) data interface module connected to a personal computer (PC). Data may be transferred to Evidence.com services.
- Real-time clock with back-up battery
- Onboard self-diagnostic and system status monitoring and reporting
- Ambidextrous safety switch
- Capable of audio/video recording with optional TASER CAM HD recorder
- The trigger activates a single cycle (approximately 5 seconds). Holding the trigger down will continue the discharge beyond the standard cycle (except when used with an APPM or TASER CAM HD AS). The CEW cycle can be stopped by placing the safety switch in the down (SAFE) position.
- Compatible with TASER standard series cartridges.

Axon Signal Performance Power Magazine (SPPM)

- Battery pack for the TASER X2 and X26P energy weapons
- Shifting the safety switch from the down (SAFE) to the up (ARMED) positions sends a signal from the SPPM. Upon processing the signal, an Axon system equipped with Axon Signal technology transitions from the BUFFERING to EVENT mode.

TASER Brand CEW Model Numbers

1. Energy Weapons:
   - TASER 7 Models: 20008, 20009, 20010, and 20011
   - TASER X2 Models: 22002 and 22003
   - TASER X26P Models: 11002 and 11003

2. Optional Extended Warranties for Energy Weapons:
   - TASER 7 – 4-year extended warranty, item number 20040
   - X2 - 4-year extended warranty, item number 22014
   - X26P - 2-year extended warranty, item number 11008
   - X26P - 4-year extended warranty, item number 11004

3. TASER 7 Cartridges (compatible with the TASER 7; required for this energy weapon to function in the probe deployment mode)
   - Standoff cartridge, 3.5 degrees, Model 20012
   - Close Quarter cartridge, 12 degrees, Model 20013

4. TASER standard cartridges (compatible with the X26P; required for this energy weapon to function in the probe deployment mode):
   - 15-foot Model: 34200
   - 21-foot Model: 44200
   - 21-foot non-conductive Model: 44205
   - 25-foot Model: 44203
   - 35-foot Model: 44206

5. TASER Smart Cartridges (compatible with the X2; required for this energy weapon to function in the probe deployment mode):
   - 15-foot Model: 22150
   - 25-foot Model: 22151
   - 25-foot inert simulation Model: 22155
   - 25-foot non-conductive Model: 22157
   - 35-foot Model: 22152

6. Power Modules for TASER 7 energy weapons:
   - Tactical battery pack Model 22018
   - Compact battery pack Model 22019
   - Non-Rechargeable battery pack Model 22020
   - Disconnect battery pack Model 20027

7. TASER CAM HD recorder Model: 26810 (full HD video and audio) and TASER CAM HD with AS (automatic shut-down feature) Model: 26820. The TASER CAM HD is compatible with both the X26P and X2 energy weapons.
   - TASER CAM HD replacement battery Model: 26764
   - TASER CAM HD Download Kit Model: 26762
   - TASER CAM HD optional 4-year extended warranty, item number 26763

8. Power Modules (Battery Packs) for X26P and X2 energy weapons:
   - Performance Power Magazine (PPM) Model: 22010
   - Tactical Performance Power Magazine (TPPM) Model: 22012
   - Automatic Shut-Down Performance Power Magazine (APPM) Model: 22011
   - eXtended Performance Power Magazine (XPPM) Model: 11010
   - eXtended Automatic Shut-Down Performance Power Magazine (XAPPM) Model: 11015
   - Axon Signal Performance Power Magazine (SPPM) Model: 70116

9. TASER Dataport Download Kits:
   - Dataport Download Kit for the X2 and X26P Model: 22013

10. TASER 7 Dock:
    TASER 7 Dock Core and Multi-bay Module: 74200

11. TASER Blast Door Repair Kit Model 44019 and TASER Blast Door Replenishment Kit Model 44023

12. Energy Weapon Holsters:
    - Right-hand TASER 7 holster by Safariland Model: 20063
    - Left-hand TASER 7 holster by Safariland Model: 20068
    - Right-hand TASER 7 holster with cartridge carrier by Safariland Model: 20160
    - Left-hand TASER 7 holster by with cartridge carrier by Safariland Model: 20161

- Right-hand X2 holster by BLACKHAWK Model: 22501
- Left-hand X2 holster by BLACKHAWK Model: 22504
- Right-hand X26P holster by BLACKHAWK Model: 11501
- Left-hand X26P holster by BLACKHAWK Model: 11504

13. TASER Simulation Suit II Model 44550

14. TASER 7 conductive target Model: 80087

AUTHORIZED DISTRIBUTORS FOR TASER BRAND ENERGY WEAPON PRODUCTS	SOLE AUTHORIZED REPAIR FACILITY FOR TASER BRAND ENERGY WEAPON PRODUCTS
Axon Enterprise, Inc. **17800 N. 85th Street, Scottsdale, AZ 85255** **Phone: 800-978-2737** **Fax: 480-991-0791** **or** **Proforce Law Enforcement** **2625 Stearman Road** **Prescott, Arizona 86301** **Phone: 928-776-7192** **Fax: 928-445-3468**	**Axon Enterprise, Inc.** **17800 N. 85th Street, Scottsdale, AZ 85255** **Phone: 800-978-2737** **Fax: 480-991-0791**

Please contact your local Axon authorized distributor or call us at 1-800-978-2737 with any questions.

Sincerely,

Josh Isner
Chief Revenue Officer
Axon Enterprise, Inc.

BLACKHAWK! is a trademark of the Blackhawk Products Group, and Safariland is a trademark of Safariland, LLC.

The 'Delta Axon' logo, Axon, Evidence.com, Trilogy, X2, X26P, TASER, and TASER 7 are trademarks of Axon Enterprise, Inc., some of which are registered in the US and other countries. For more information visit www.axon.com/legal. All rights reserved. © 2021 Axon Enterprise, Inc.

Axon Enterprise, Inc.
17800 N 85th St.
Scottsdale, Arizona 85255
United States
VAT: 86-0741227
Domestic: (800) 978-2737
International: +1.800.978.2737

Q-322906-44392.649RH

Issued: 07/15/2021
Quote Expiration: 08/14/2021
Account Number: 107814
Payment Terms: N30
Delivery Method: Fedex - Ground

SHIP TO	BILL TO
Business;Delivery;Invoice;Other-1 Civic Center Cir 1 Civic Center Cir Brea, CA 92821-5792 USA	Brea Police Dept. - CA 1 Civic Center Cir Brea, CA 92821-5792 USA Email:

SALES REPRESENTATIVE	PRIMARY CONTACT
Rachel Hall Phone: Email: rhall@axon.com Fax:	 Phone: (714) 990-7624 Email: roberth@ci.brea.ca.us Fax: (714) 990-7164

Program Length	60 Months
TOTAL COST	$161,969.99
ESTIMATED TOTAL W/ TAX	$173,142.83

Average Savings Per Year	$2,971.52
TOTAL SAVINGS	$14,857.60

PAYMENT PLAN

PLAN NAME	INVOICE DATE	AMOUNT DUE
Upfront Y1	Jul, 2021	$161,969.99

Quote Details

Bundle Summary

Item	Description	QTY	Average Cost Per Year	Cost Per User Per Month
T7Basic	2021 Taser 7 Basic Bundle	65	$28,860.00	$37.00
DynamicBundle	Dynamic Bundle	1	$3,534.00	$294.50

Bundle: 2021 Taser 7 Basic Bundle Quantity: 65 Start: 8/15/2021 End: 8/14/2026 Total: 144299.99 USD

Category	Item	Description	QTY	List Unit Price	Tax	Net Unit Price	Total(USD)
Handle & Warranty Bundle	20008	TASER 7 HANDLE, YLW, HIGH VISIBILITY (GREEN LASER), CLASS 3R	65	$1,570.43	$7,004.29	$1,390.43	$90,377.99
Handle License	20248	TASER 7 EVIDENCE.COM LICENSE	65	$273.91	$0.00	$273.91	$17,804.30
Dock & Warranty Bundle	74200	TASER 7 6-BAY DOCK AND CORE	1	$1,369.56	$106.14	$1,369.56	$1,369.56
Battery & Warranty Bundle	20018	TASER 7 BATTERY PACK, TACTICAL	78	$78.52	$474.66	$78.52	$6,124.68
Spare Handle & Warranty Bundle	20008	TASER 7 HANDLE, YLW, HIGH VISIBILITY (GREEN LASER), CLASS 3R	2	$1,570.43	$243.41	$1,570.43	$3,140.86
Dock Mount	70033	WALL MOUNT BRACKET, ASSY, EVIDENCE.COM DOCK	1	$40.08	$3.11	$40.08	$40.08
Dock Power Cord	71019	NORTH AMER POWER CORD FOR AB3 8-BAY, AB2 1-BAY / 6-BAY DOCK	1	$9.54	$0.74	$9.54	$9.54
Taser 7 Target	80087	TASER 7 TARGET, CONDUCTIVE, PROFESSIONAL (RUGGEDIZED)	1	$136.96	$10.61	$136.96	$136.96
Taser 7 Target Frame	80090	TARGET FRAME, PROFESSIONAL, 27.5 IN. X 75 IN., TASER 7	1	$68.48	$5.31	$68.48	$68.48
Holsters	20062	TASER 7 HOLSTER - BLACKHAWK, RIGHT HAND	50	$73.04	$283.04	$73.04	$3,652.16
Holsters	20067	TASER 7 HOLSTER - BLACKHAWK, LEFT HAND	15	$73.04	$84.92	$73.04	$1,095.65
Other	80395	EXT WARRANTY, TASER 7 HANDLE	65	$279.62	$1,408.58	$279.62	$18,175.22
Other	80396	EXT WARRANTY, TASER 7 SIX BAY DOCK	1	$279.62	$21.68	$279.62	$279.62
Other	80374	EXT WARRANTY, TASER 7 BATTERY PACK	78	$18.79	$113.59	$18.79	$1,465.65
Other	80395	EXT WARRANTY, TASER 7 HANDLE	2	$279.62	$43.34	$279.62	$559.24

Bundle: Dynamic Bundle Quantity: 1 Start: 8/15/2021 End: 8/14/2026 Total: 17670 USD

Category	Item	Description	QTY	List Unit Price	Tax	Net Unit Price	Total(USD)
Other	22176	TASER 7 LIVE CARTRIDGE, CLOSE QUARTERS (12-DEGREE) NS	220	$38.00	$647.90	$38.00	$8,360.00
Other	22181	TASER 7 INERT CARTRIDGE, CLOSE QUARTERS (12-DEGREE) NS	6	$49.00	$0.00	$0.00	$0.00
Other	22179	TASER 7 INERT CARTRIDGE, STANDOFF (3.5-DEGREE) NS	6	$49.00	$0.00	$0.00	$0.00
Other	22175	TASER 7 LIVE CARTRIDGE, STANDOFF (3.5-DEGREE) NS	245	$38.00	$721.52	$38.00	$9,310.00
Other	80090	TARGET FRAME, PROFESSIONAL, 27.5 IN. X 75 IN., TASER 7	1	$75.00	$0.00	$0.00	$0.00
Other	80087	TASER 7 TARGET, CONDUCTIVE, PROFESSIONAL (RUGGEDIZED)	1	$150.00	$0.00	$0.00	$0.00

Tax is estimated based on rates applicable at date of quote and subject to change at time of invoicing. If a tax exemption certificate should be applied, please submit prior to invoicing.

Standard Terms and Conditions

Axon Enterprise Inc. Sales Terms and Conditions

Axon Master Services and Purchasing Agreement:

This Quote is limited to and conditional upon your acceptance of the provisions set forth herein and Axon's Master Services and Purchasing Agreement (posted at www.axon.com/legal/sales-terms-and-conditions), as well as the attached Statement of Work (SOW) for Axon Fleet and/or Axon Interview Room purchase, if applicable. In the event you and Axon have entered into a prior agreement to govern all future purchases, that agreement shall govern to the extent it includes the products and services being purchased and does not conflict with the Axon Customer Experience Improvement Program Appendix as described below.

ACEIP:

The Axon Customer Experience Improvement Program Appendix, which includes the sharing of de-identified segments of Agency Content with Axon to develop new products and improve your product experience (posted at www.axon.com/legal/sales-terms-and-conditions), is incorporated herein by reference. By signing below, you agree to the terms of the Axon Customer Experience Improvement Program.

Acceptance of Terms:

Any purchase order issued in response to this Quote is subject solely to the above referenced terms and conditions. By signing below, you represent that you are lawfully able to enter into contracts. If you are signing on behalf of an entity (including but not limited to the company, municipality, or government agency for whom you work), you represent to Axon that you have legal authority to bind that entity. If you do not have this authority, please do not sign this Quote.

Signature

Date Signed

7/15/2021

PROFORCE LAW ENFORCEMENT
2625 Stearman Drive, Prescott AZ, 86301
Tel: 928-776-7192 Fax: 928-445-3468
email: sales@proforceonline.com www.proforceonline.com

ORDER

QUOTE

QUOTE#	PAGE
562528	1
SHIP DATE	
A.S.A.P.	

SOLD TO

CITY OF BREA
ACCTS PAYABLE
1 CIVIC CENTER CIRCLE
BREA CA 92821-5732

SHIP TO

BREA POLICE DEPARTMENT
CHRIS HARVEY
1 CIVIC CENTER CIRCLE
BREA CA 92821

JOB #	ORD. DATE	CUST.#	LOC.	SALESMAN	SHIP VIA	FRT.
NA	07/22/21	000162	A	GREGG MCCLUNG	FX G-FOB ORIGIN	

QTY. ORDER	ITEM NO./DESC.	UNIT PRICE	UOM DISC.	NET PRICE
65	NON-STOCK TASER 7 - BASIC PLAN UPFRONT PAYMENT PLAN INCLUDES THE FOLLOWING: *T7 HANDLE *T7 BATTERY *T7 HOLSTER *T7 DOCKING STATION (QTY 1) *5 YEAR EVIDENCE.COM LICENSE/SUBSCRIPTION *5 YEAR WARRANTY ON ALL HARDWARE (TASER, BATTERY & DOCKING STATION)	2,400.00	EA .00	156,000.00
220	22176 TSR T7 CART LIVE CLOSE QUARTER 12 DEG	37.95	EA .00	8,349.00
6	22181-TSR TSR T7 CART INERT CLOSE QRTR 12 DEG	48.95	EA .00	293.70

COMMENT

TERMS

PROFORCE LAW ENFORCEMENT
2625 Stearman Drive. Prescott AZ, 86301
Tel: 928-776-7192 Fax: 928-445-3468
email: sales@proforceonline.com www.proforceonline.com

ORDER / QUOTE	QUOTE#	PAGE
	562528	2
	SHIP DATE	
	A.S.A.P.	

SOLD TO
CITY OF BREA
ACCTS PAYABLE
1 CIVIC CENTER CIRCLE
BREA CA 92821-5732

SHIP TO
BREA POLICE DEPARTMENT
CHRIS HARVEY
1 CIVIC CENTER CIRCLE
BREA CA 92821

JOB #	ORD. DATE	CUST.#	LOC.	SALESMAN	SHIP VIA	FRT.
NA	07/22/21	000162	A	GREGG MCCLUNG	FX G-FOB ORIGIN	

QTY. ORDER	ITEM NO./DESC.	UNIT PRICE	UOM DISC.	NET PRICE
6	22179-TSR TSR T7 CART INERT STANDOFF 3.5 DEG	48.95	EA .00	293.70
245	22175 TSR T7 CART LIVE STANDOFF 3.5 DEG	37.95	EA .00	9,297.75
1	80090 TSR T7 TARGET FRAME	88.13	EA .00	88.13
1	80087 TSR T7 TARGET COND PRO RUGGED	150.00	EA .00	150.00
65	TRADES-CA CREDIT FOR TRADES-IF NOT SENT AS SPECIFIED, MAY BE REDUCED	120.00-	EA .00	7,800.00CR
	X26 TASERS			
	PLEASE READ ATTACHED:			
	Please be aware that handling charges are not actual freight and are therefore subject to sales tax in California and Washington. This quote is valid for 45 days from the date of the quote,			

COMMENT

TERMS

PROFORCE LAW ENFORCEMENT
2625 Stearman Drive. Prescott AZ, 86301
Tel: 928-776-7192 Fax: 928-445-3468
email: sales@proforceonline.com www.proforceonline.com

ORDER QUOTE

QUOTE#	PAGE
562528	3
SHIP DATE	
A.S.A.P.	

SOLD TO
CITY OF BREA
ACCTS PAYABLE
1 CIVIC CENTER CIRCLE
BREA CA 92821-5732

SHIP TO
BREA POLICE DEPARTMENT
CHRIS HARVEY
1 CIVIC CENTER CIRCLE
BREA CA 92821

JOB #	ORD. DATE	CUST.#	LOC.	SALESMAN	SHIP VIA	FRT.
NA	07/22/21	000162	A	GREGG MCCLUNG	FX G-FOB ORIGIN	

QTY. ORDER	ITEM NO./DESC.	UNIT PRICE	UOM DISC.	NET PRICE
	pending credit approval, and is subject to inventory, manufacturer's availability and price change. Please call to receive price update upon expiration. ORDERING INSTRUCTIONS: Please reply to your sales representative in writing to process this order or send an email to kari.martin@proforceonline.com. For orders over $5,000, a PO or signed quote is required to process the order. Returned items are subject to 20% restocking fee. All sales are final on non-stocked/special order items			
	IMPORTANT: To order from this quotation, please sign below.			
	Printed Name: _____			
	Date: _____ P.O.:_____			
	Signature: _____			

COMMENT
FOR: CHRIS HARVEY

BY: KARI MARTIN

TERMS DUE NET 30 DAYS

SALES AMOUNT	166,672.28
7.750% SALES TAX	13,521.60
SUB TOTAL	180,193.88

City of Brea

COUNCIL COMMUNICATION

TO: Honorable Mayor and City Council Members

FROM: Bill Gallardo, City Manager

DATE: 08/17/2021

SUBJECT: Purchase of New Zebra Brand Ticket-Writer Printers for Police Department

RECOMMENDATION

Approve the purchase of thirty-two new Zebra brand model ZQ521 ticket-writer printers (and related accessories) from MSA Systems, Inc. for $28,360.28.

BACKGROUND/DISCUSSION

The Police Department uses tablet based software to create electronic traffic and criminal citations. Police officers are required to give printed copies of citations to violators, and use Zebra brand printers to accomplish this. The current ticket writer printers are old, are out of warranty, and are no longer supported by the manufacturer. In preparation for the FY 2021-22 budget, the Police Department submitted a Decision Package to purchase thirty-two new Zebra printers. The Decision Package was approved as part of budget adoption, and the approved Decision Package is attached to with this report. MSA Systems, Inc. provided a quote for the purchased of the new printers and related components and accessories. Including tax and shipping, the printers will cost approximately $28,360.28. A copy of the quote is attached. MSA Systems, Inc maintains a current GSA contract (#GS-35F-0538Y). The United States General Services Administration (GSA) negotiates long-term government-wide contracts with commercial firms providing federal, state, and local government buyers access to millions of products and services at volume discount pricing. Purchasing Code 3.24 allows Brea to make purchases from such contracts, which offer better pricing based on higher volumes than the City could realize on its own and helps to expedite the procurement process. For this reason, this purchase is exempt from normal bidding processes.

COMMISSION/COMMITTEE RECOMMENDATION

The Finance Committee reviewed staff's recommendation at their August 10, 2021 meeting and recommended for Council approval.

FISCAL IMPACT/SUMMARY

During budget preparations, the Budget & Revenue Division allocated $32,100 for this purchase in account 172-21-2141-4639

RESPECTFULLY SUBMITTED:

William Gallardo, City Manager
Prepared by: Christopher Harvey, Police Lieutenant
Concurrence: Adam Hawley, Police Chief

Attachments

Decision Package
Quote from MSA Systems

FY 2021-22 DECISION PACKAGE

Department: **Police Services**

Division: **Uniform/Patrol**

Request: **Mobile Printers for Panasonic Toughbook (Crossroads Citations)**

A mobile printer is an essential piece of equipment for patrol, traffic, jailer, and investigations. The mobile printer is synced to the Panasonic Toughbook tablet used by each officer and allows the officer to print citations from the Crossroads Tablet Citation Program made by Crossroads Software.

The majority of the department's mobile printers were purchased approximately ten years ago and had an end of life in 2015. The current vendor (Zebra) will no longer support the equipment as of December 31, 2020 and because of the current age of the equipment, the mobile printers are starting to have problems and stop working.

Zebra offers a new updated model that is durable and compatible for use with the Crossroads Tablet Citation software currently being used. The Police Department contacted Crossroads Software and the mobile printer they recommended for their software is the Zebra Model ZQ521. This model is similar in size to the current RW420 printer, so the current printer holster used by the Traffic Division on the BMW motorcycles can still be used, saving money on having to purchase new holsters. The current printer paper rolls used in the RW420 will also work in the Zebra Model ZQ521.

Currently, each officer in patrol and traffic is issued a printer to use with their assigned tablet. The tablet version of the Crossroads Citation Program allows for a much simpler process to sync printers. Therefore, with the purchase of the new ZQ521 printer, the Police Department proposes purchasing a total of 32 printers at a cost of $675 each (includes battery). This will be distributed as follows: Eighteen (18) for each patrol vehicle, six (6) for each traffic officer, two (2) shared by the Crime Suppression Unit, two (2) shared by the Detective Bureau, one (1) for the Jail and three spare printers. This is a total cost of $21,600 plus tax.

The department evaluated purchasing a printer for each officer, however would require purchasing upwards of 45 printers (plus spares), which would significantly increase the cost of this proposal. In order to charge the mobile printer batteries in the patrol units, the department proposes purchasing eighteen (18) DC vehicle 12-24V charging adapters (Zebra QLN/ZQ5) at $39 each, plus six AC mobile charging adapters (Zebra ZQ500) at $50 each for the Traffic Division. The total cost for the charging adapters will be $1,002 plus tax.

The Traffic Division will use the current printer holster mounted on the motorcycle to protect their printers. The department proposes purchasing twenty-three (23) soft cases with a shoulder strap (Zebra Soft Case ZQ520) at $58 each. These soft cases will be used to hold and protect the printers in the patrol units, crime suppression unit, detective bureau and jail. The printer can be used while still in the soft case. The total cost for the soft cases will be $1,334 plus tax.

With the purchase of the charging adaptors for patrol units and traffic division, the Police Department would still need to provide a means to charge the batteries for the remaining printers, so this proposal includes purchasing one 4-bay power station (Zebra Quad battery charger) at $250 each and four (4) spare batteries (Zebra Smart battery ZQ510/20) at $77 each. This will allow a means to swap out and charge batteries. The total cost for these accessories will be $558 plus tax.

FY 2021-22 DECISION PACKAGE

Along with the above costs, the Police Department would also purchase one USB cable (Zebra ZQ500 6" cable) at $16 each used for programming the printers and a 3-year warranty (Zebra OnecareZQ520) at $165 for each printer. The total cost for the USB cable and warranty is $5,296 plus tax.

Description	**Total Cost**
Printers (Zebra Model ZQ521)	$21,600
Charging adapters	$1,002
Soft cases	$1,334
Accessories	$558
Cable & 3-year warranty	$5,296
Sub-Total	$29,790
Tax (7.75%)	*$2,309*
Total	$32,099

The Police Department received a quote from MSA Systems Inc., who distributes the ZEBRA products on the west coast, and the total cost without tax and shipping will be $29,790 and with sales tax would cost approximately $32,100.

This request is recommended to be funded by the Public Safety Augmentation Fund (172) which is restricted for use for public safety services. There is no General Fund impact.

Fiscal Impact

		Fund/Dept/Program No		FY 2021-22		*Ongoing*
Salary/Benefits			**$**	**0**	*$*	*0*
Services/Supplies				**0**		*0*
Capital Outlay		172 21 2141 4639		**32,100**		*0*
	Subtotal		**$**	**32,100**	*$*	*0*
Offset				**0**		*0*
	Total		**$**	**32,100**	*$*	*0*

MSA Systems, Inc.
1340 S De Anza Blvd., Suite 103
San Jose, CA 95129-4644
Tel: 408-252-9000
Fax: 408-252-9900

SALES QUOTE		
Quote#	Issue	Expires
CM-071321-005	7/13/2021	12/31/2021

Quotation Prepared For:	SHIP TO:	Account Manager	Source	Inside Support
Brea PD		Christi		CM

SHIP VIA
Ground unless otherwise specified

PAYMENT TERMS
Net 30 Days

SPECIAL INSTRUCTIONS

ID	Part Number	Description	Qty	List Price	Client Unit Price	Client Extended Price
1		ZEBRA AIT, PRINTER, ZQ521, MEDIA WIDTH 4.45"/113MM; ENGLISH/LATIN FONTS, BLUETOOTH 4.1, STND BATTERY, US/CANADA CERTS	32		$575.00	$18,400.00
2		ZEBRA,ACCESSORY,QL420,QL320,QL220 AND ZQ500,MOBILE AC ADAPTOR, US	6		$50.00	$300.00
3	for programming	ZEBRA,ACCESSORY,ZQ500,USB CABLE WITH TWIST LOCK 6'	1		$16.00	$16.00
4		ZEBRA AIT, ACCESSORY, KIT, SOFT CASE, ZQ520	23		$58.00	$1,334.00
5		ZEBRA AIT, ACCESSORY, KIT, DC-DC VEHICLE ADAPTER, CIG,12-24V, QLN/ZQ5/ZQ6	18		$39.00	$702.00
6		ZEBRA AIT, ACCESSORY, KIT, 4-BAY POWER STATION, US (TYPE A) CORD, ZQ500 SERIES	1		$250.00	$250.00
7		ZEBRA, AIT, KIT ACC QLN2/3, ZQ510/20, ZQ610/20 SPARE SMART BATTERY	4		$77.00	$308.00
8		ZEBRA, ONECARE, ZQ510, ZQ520, ESSENTIAL, PURCHASED WITHIN 30 DAYS OF DEVICE, 3 DAY TAT NA, MX; 5 DAY TAT ROW, 3 YEARS, COMPREHENSIVE	32		$165.00	$5,280.00
		MSA Systems California Certified Small Business Women Owned				

TERMS AND CONDITIONS

1) The Customer hereby places an order for and agrees to purchase the above items per the Terms listed below.

2) Price: The above price does not include sales, excise, use, value added tax (vat) and other taxes, levies or fees now in effect or hereafter levied by reason of this transaction. Customer shall pay all such taxes, levies and fees. The Products are being sold hereunder F.O.B., place of shipment. Customer is liable for all shipping, media and insurance charges for the Products. All payments shall be made in United States dollars.

3) Payment terms: Invoices not paid within the specified Payment Terms period will incur a 1.5% fee per month. The Customer shall incur a $50 fee for each check returned due to insufficient funds. The Customer shall pay for all collection costs, including attorney fees and penalties as a result of not adhering to the payment terms.

4) Warranties: We make no warranty, expressed or implied, or indemnity relating to the Products. We assign all warranties, indemnities, and service features relating to the Products directly to Customer.

5) Returns: Software, parts, cables, printer consumables (labels, ribbons, and print heads), TEC and Fujitsu/ICL products are not returnable. All DOA requests must be made within 5 days of receipt; all other RMA requests must be made within 10 days of receipt. All returns/exchanges will incur a minimum restocking fee of 10-25% (varies by manufacturer and condition) or $50, whichever is more.

The following criteria must be met: (a) All returned items must have a valid Return Authorization prior to return - product received without an RMA number or an expired RMA number will be returned unopened, (b) all original manufacturer's packaging (both inside and outside) must be returned, (c) NO writing on any boxes, (d) all manuals, cables, warranty cards, static bag, etc must be included; just as you received them and (e) all product must be clean and without scratches or usage marks of any kind. Credit will be issued only after inspection. Items opened and used are NOT returnable under any condition.

6) The terms of this quote supercede any customer terms and conditions.

7) This quotation supercedes any previous written or oral quotations from us. Due to the nature of our industry, pricing and availability are subject to change without notice, therefore, this quotation expires 30 days from the date shown above

Services (Non Taxable)	
Service Contracts (Non Taxable)	$5,280.00
Software	
Equipment	$21,310.00
Subtotal	$26,590.00
CA Sales Tax	$1,651.53
Ground	$118.75
Total:	**$28,360.28**

City of Brea

COUNCIL COMMUNICATION

TO: Honorable Mayor and City Council Members

FROM: Bill Gallardo, City Manager

DATE: 08/17/2021

SUBJECT: Fire Investigation Services Agreement - City of Anaheim

RECOMMENDATION

Approve The Fire Investigation Services Contract between the City of Anaheim and City of Brea.

BACKGROUND/DISCUSSION

The California Fire Code requires the Brea Fire Department to investigate fires within its jurisdiction as the Authority Having Jurisdiction (AHJ). When a fire agency cannot conduct the investigation, the AHJ may seek out other public agencies to assist in determining the cause and origin and pursue any criminal related follow-up as necessary. Fire investigation ultimately provides for increased community risk reduction, improved firefighting tactics, heightened public awareness, more focused prevention efforts, and reduced fire-related criminal activity.

The Brea Fire Department (BFD) historically has not had an internal fire/arson Investigation program. Recently, the BFD attempted to initiate an internal fire/arson investigation program, however was unable to do so due to a labor dispute. As is routine for the Orange County Operational Area, the BFD utilizes the specialties of its Orange County partner agencies to accomplish these needs. Although BFD has utilized the fire/arson investigation services of Anaheim Fire & Rescue for many years, Anaheim Fire & Rescue and the BFD seek to formalize the services and associated costs through a contract at the present time. As one of Brea's nearby cities, Anaheim typically receives the first call for these services. Based on historical analysis, the BFD does not anticipate exceeding an annual expenditure of $3,500. During fire/arson investigations, the Brea Fire Chief and Fire Marshal remain the primary lead over the incident and work with the Anaheim investigators throughout the investigation. Coordination with the Brea Police Department for any criminal activity may be required as necessary.

The BFD may reconsider its own internal fire/arson investigation program in the not too distant future. In the event the BFD establishes its own fire/arson investigation program, the City will likely only require Anaheim Fire & Rescue's investigation services on a very limited basis when exigent or unusual circumstances exist. A potential future BFD fire/arson investigation program would be self-sufficient and include criminal follow-up, limiting the impact on Brea PD. Formation of such program will be brought before City Council at a later date.

COMMISSION/COMMITTEE RECOMMENDATION

The Finance Committee reviewed staff's recommendation at their August 10, 2021 meeting and recommended for Council approval.

FISCAL IMPACT/SUMMARY

The projected impact to the General Fund would be $3,500.

RESPECTFULLY SUBMITTED:

William Gallardo, City Manager
Prepared by: Adam Loeser, Fire Chief

Attachments

Fire Investigator Services Agmt

Fire Investigator Services Agreement

The City of Brea

AGREEMENT BETWEEN THE CITY OF ANAHEIM

AND THE CITY OF BREA

FOR FIRE INVESTIGATOR SERVICES

THIS AGREEMENT, made and entered into this _____ day of _____, 2021, is by and between the City of Anaheim ("Anaheim") and the City of Brea ("Brea").

R E C I T A L S

WHEREAS, the Fire Chief for Anaheim has determined that Anaheim fire investigators have the capacity to provide fire investigation services to other jurisdictions; and

WHEREAS, Brea desires to use the services of the Anaheim fire investigators on an as needed basis, and further agrees to compensate Anaheim for these services when rendered; and

WHEREAS, Anaheim has determined that it is in the best interest of Anaheim to provide fire investigator services to the Brea Fire Department in exchange for the reimbursement of costs; and

WHEREAS, California Government Code section 54981 provides that the city council of a city may contract with another local agency for the performance of municipal services.

NOW, THEREFORE, AND IN CONSIDERATION OF THE MUTUAL PROMISES, COVENANTS AND CONDITIONS HEREINAFTER SET FORTH, THE PARTIES HERETO AGREE AS FOLLOWS:

1. Anaheim agrees to provide fire investigation services ("Services") to Brea, when such services are requested by Brea, subject to the following conditions:

    a. An Anaheim fire investigator is available to respond.

    b. Fire investigation needs in Anaheim take precedence over requests for fire investigation services in Brea.

DRAFT

c. If the Anaheim fire investigator is not immediately available to respond to Brea, he/she will respond as soon as practicable.

d. Requests for the response of the Anaheim fire investigator(s) shall be made through Metro Net Fire Dispatch Center by a Chief Officer representing the Brea Fire Department.

e. Fire investigator services may be utilized for origin and cause investigations, arson investigations and prosecution, 911 abuse investigations or fraud related to fire protection services.

2. When requested to respond to the scene of an emergency incident in Brea, the Anaheim fire investigator(s) will report to the incident commander upon arrival and coordinate the investigation procedures through the incident commander.

3. Other investigations conducted by the Anaheim fire investigator(s) in Brea shall be coordinated through the Brea Fire Chief or designated representative.

4. From time to time, subject to availability, the Anaheim fire investigator(s) may be requested to provide training to Brea personnel on origin and cause fire investigation techniques, in order to facilitate initial origin and cause investigations in Brea.

5. Anaheim fire investigator(s) will work in coordination with the Brea Police Department on criminal investigations. The Brea Police Department will be notified by the incident commander, Fire Chief or the Anaheim fire investigator(s) of the Anaheim fire investigator's involvement and status under this Agreement.

6. The Anaheim fire investigator(s) will provide a written report to the Brea fire chief or the chief's designated representative, for each investigation completed. All reports shall be requested through the fire department's custodian of records. All fees associated with the request will be waived under this agreement.

Additionally, the Anaheim fire investigator(s) shall be responsible to submit all necessary reports or other documentation to the Office of the District Attorney, through the filing agency, for prosecution of cases that are deemed prosecutable. The Anaheim fire investigator(s) shall also be available for follow-up meetings with the Brea Police Department investigators, insurance investigators and District Attorney Personnel. The Anaheim investigator(s) shall be made available to testify in court, as required.

DRAFT

7. In consideration of Services provided under this Agreement, Brea agrees to reimburse the Anaheim under the following established rules and formulas:

   a. The rate of the Fire Captain Level IV Arson Investigator rate as set forth in Anaheim's existing Memorandum of Understanding with the Anaheim Firefighter's Association. It will further be calculated within one of two categories: Regular Duty (100%) or Over Time (150%).

   b. Portal to Portal. This is defined as time of dispatch to the time of Available in Quarters. This is established for fire scene origin and cause determination, evidence collections, photographic scene documentation, data collection, and case follow up requirements as requested and approved.

   c. All investigative services that are applicable to the fire scene origin and cause determination. This includes, but is not limited to, report writing, evidence processing, interviews, meetings with law enforcement agencies, or presentation(s) to the governing agency as requested and approved. This could include training requests.

   d. A twelve percent (12%) administrative rate will be calculated and applied to all billable hours when invoiced under this agreement.

   e. Brea agrees to provide this reimbursement within 30 calendar days of receipt of an invoice from Anaheim.

   f. Brea will be notified 30 days prior to an increase of any base or special pay related to the Fire Captain Level IV Arson Investigator rate with each subsequent Memorandum of Understanding that Anaheim executes with the Anaheim Firefighter's Association.

8. Anaheim shall maintain worker's compensation insurance covering its fire investigator.

9. Each party hereto shall defend, indemnify, and hold harmless the other party and its respective council members, officers, employees, and agents, from and against any and all liabilities, claims, demands, debts, suits, actions, and causes, arising out of any negligent or willful act or omission of such indemnifying party or its officers, employees or agents, done or performed pursuant to the terms and conditions of this agreement.

10. This Agreement shall be effective upon execution of the Agreement by Anaheim and continue until terminated. Either party may terminate this agreement for convenience by giving thirty (30) days written notice to the other party. Written notice shall be delivered or mailed to:

DRAFT

To Anaheim:

Attn: Fire Chief

Anaheim Fire & Rescue

201 S. Anaheim Blvd. Ste. 300

Anaheim, CA 92805

To Brea:

Attn: Fire Chief

Brea Fire Department

303 W. Commonwealth Ave.

Fullerton, CA 92832

DRAFT

IN WITNESS WHEREOF, the duly authorized officials of the parties hereto have, in their respective capacities, set their hands as of the date first hereinabove written.

CITY OF ANAHEIM

Dated:_____ By:_____

Mayor

_____

City Clerk

APPROVED AS TO FORM:

ROBERT FABELA, CITY ATTORNEY

By: _____

Bryn M. Morley

Deputy City Attorney

CITY OF BREA

Dated:_____ By:_____

Steven Vargas, Mayor

DRAFT

APPROVED AS TO FORM:

By:_____

Terence Boga, City Attorney

DRAFT

Agenda Item 20.

City of Brea

COUNCIL COMMUNICATION

TO: Honorable Mayor and City Council Members

FROM: Bill Gallardo, City Manager

DATE: 08/17/2021

SUBJECT: Award the Country Hills Pavement & Water Improvements, CIP Project No. 7322

RECOMMENDATION

1. Approve the Plans and Specifications;
2. Receive bids;
3. Award Contract to the lowest responsive and responsible bidder, Williams Pipeline Contractors, Inc., in the amount of $4,791,264.52; and
4. Authorize the City Engineer to issue Change Orders up to a "not to exceed" amount of 10% of the Contract Price.

BACKGROUND/DISCUSSION

The Country Hills Pavement & Water Improvement Project, Project No. 7322 ("Project") is programmed in the Fiscal Year ("FY") 2021-22 Capital Improvement Program (CIP). The Project is located within the residential neighborhood north of Birch Street, south of Lambert Road, east of North Associated Road, and west of Kraemer Boulevard. (Attachment A).

The work consists of pavement rehabilitation including cold milling; placement of new asphalt concrete; sidewalk improvements; curb and gutter improvements; curb ramp improvements; adjustment of manholes; replacing over 12,000 linear feet of water lines; and replacing water meters in the Country Hills neighborhood.

Final Plans and Specifications ("Bid Documents") were advertised for bids on CIPlist.com and subsequently published in the adjudicated newspaper in accordance with the California Uniform Public Construction Cost Accounting (CUPCCA). A copy of the Bid Documents is available in the City Clerk's office for review. There were three addendums to the Bid Documents, which provided clarification regarding the bid opening date and other miscellaneous modifications. Therefore, staff recommends City Council approve the final Bid Documents with the three addendums as bid.

On August 6, 2021, staff received a total of 11 bid proposals. Staff then tabulated the bid proposals and determined that the apparent low bid amount was $4,791,264.52 of Williams Pipeline Contractors, Inc. from Mission Hills, California (Attachment B).

Below are the results of the 11 bids received within Table 1:

Table 1 - Total Bid Summary

Bid Number	Bidder	Amount Bid
1.	Williams Pipeline Contractors, Inc.	$4,791,264.52
2.	CEM Construction	$4,961,475.50
3.	Stephen Doreck	$5,482,869.50
4.	T.E. Roberts	$5,509,991.00
5.	HYM Engineering	$5,819,590.06
6.	Christensen Brothers	$6,000,040.18
7.	Big Ben	$6,094,706.60
8.	Dominguez General	$6,151,923.50
9.	Sully Miller	$6,673,330.00
10.	Kana Pipeline	$6,888,000.00
11.	Gentry Brothers, Inc.	$7,100,304.84
	Engineer's Estimate	**$5,100,000.00**

As depicted within Table 1, the three lowest bids were very competitive with the apparent lowest bid price from Williams Pipeline Contractors, Inc. coming in lower than the Engineer's Estimate by approximately $308,736, about 6% under.

Williams Pipeline Contractors, Inc. has been in the construction business for over 49 years and has completed construction of similar improvement projects for the City of Downey, City of Whittier, and City of Pasadena. The company has a valid contractor' s license and has received a satisfactory rating according to the references. If awarded, construction could begin in September 2021 and take approximately nine (9) months to complete, weather permitting.

COMMISSION/COMMITTEE RECOMMENDATION

Staff provided an oral update to the Finance Committee at their August 10, 2021 meeting on the bid results received on August 6, 2021, with Williams Pipeline Contractor, Inc. as the apparent low bidder in the amount of $4,791,264.52 .

FISCAL IMPACT/SUMMARY

The Project budget is programmed in the FY 2021- 22 CIP with an amount of $5,817,986. The total updated cost for the Project going into construction is estimated at $5,811,227 based on the final design and staff costs ($185,084), apparent low bid amount of $4,791,264.52, a 10% contingency ($479,126.45), and construction engineering costs ($355,751.39). Once the Project is complete, the remaining project funds will be de-obligated back into the associated funds. The sources of funds within the approved budget are from the Measure M Fund (260), RMRA Fund (221), Water Fund (420), and Gas Tax Fund (220). There is no impact to the General Fund from this project.

The work consists of pavement rehabilitation including cold milling; placement of new asphalt

concrete; sidewalk improvements; curb and gutter improvements; curb ramp improvements; adjustment of manholes; replacing over 12,000 linear feet of water lines; and replacing water meters in the Country Hills neighborhood. If City Council approves staff's recommendations, the Project is anticipated to start construction in September 2021 and be completed by May 2022, weather permitting.

RESPECTFULLY SUBMITTED:

William Gallardo, City Manager
Prepared by: Raymond Contreras, Associate Engineer
Concurrence: Michael Ho., P. E., Deputy Director of Public Works / City Engineer
Tony Olmos, P. E., Public Works Director

Attachments

Vicinity Map
Proposal

PROJECT 7322

STREET IMPROVEMENTS
COUNTRY HILLS SUBDIVISION PAVEMENT & WATER CONNECTION REHABILITATION

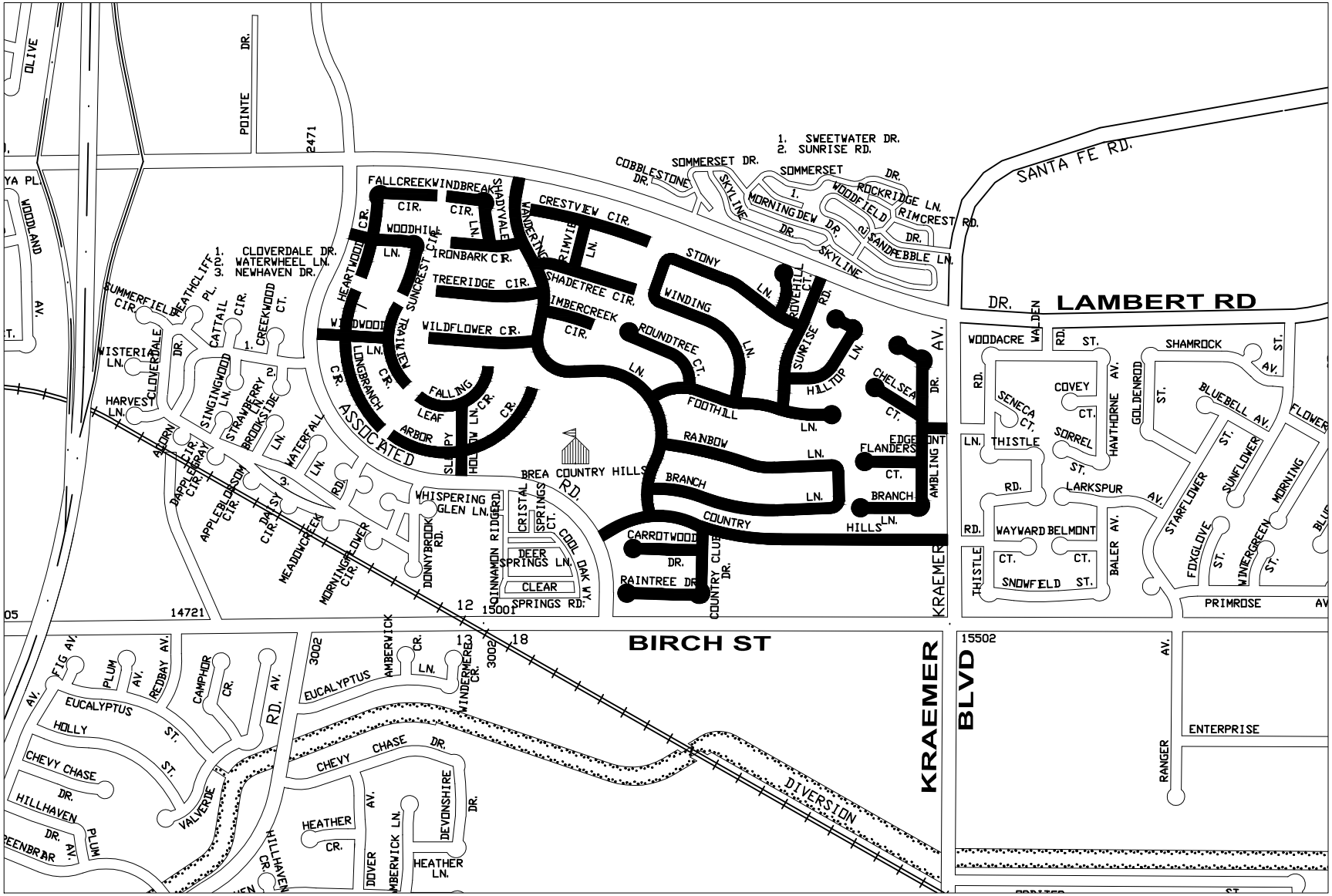

VICINITY MAP

NOT TO SCALE

Bidder Name: Williams Pipeline Contractors Inc

SECTION C

PROPOSAL

for the

COUNTRY HILLS SUBDIVISION PAVEMENT & WATER IMPROVEMENTS
CIP NO. 7322

in the

CITY OF BREA

TO THE HONORABLE MAYOR AND MEMBERS OF THE COUNCIL OF BREA:

In compliance with the Notice Inviting Sealed Bids, the undersigned hereby proposes and agrees to perform all the work therein described, and to furnish all labor, material, equipment and incident insurance necessary therefor, in accordance with the plans and specifications on file in the office of the City Engineer of the City of Brea. The undersigned agrees to perform the work therein to the satisfaction of and under the supervision of the City Engineer of the City of Brea, and to enter into a contract at the following prices. The undersigned agrees to complete the work within **180** working days, starting from the date of the Notice to Proceed.

BIDDER declares that this proposal is based upon careful examination of the work site, plans, specifications, Instructions to Bidders and all other contract documents. If this proposal is accepted for award, BIDDER agrees to enter into a contract with AGENCY at the unit and/or lump sum prices set forth in the following Bid Schedule. BIDDER understands that failure to enter into a contract in the manner and time prescribed will result in forfeiture to AGENCY of the guaranty accompanying this proposal.

BIDDER understands that a bid is required for the entire work that the estimated quantities set forth in the Bid Schedule are solely for the purpose of comparing bids and that final compensation under the contract will be based upon the actual quantities of work satisfactorily completed. THE AGENCY RESERVES THE RIGHT TO DELETE ANY ITEM FROM THE CONTRACT. It is agreed that the unit and/or lump sum prices bid include all appurtenant expenses, taxes, royalties, fees, etc., and will be guaranteed for a period of sixty days from the bid opening date. If at such time the contract is not awarded, the AGENCY will reject all bids and will readvertise the project. In the case of discrepancies in the amounts bid, unit prices shall govern over extended amounts, and words shall govern over figures.

If awarded the Contract, the undersigned agrees that in the event of the BIDDER'S default in executing the required contract and filing the necessary bonds and insurance certificates within 10 working days after the date of the AGENCY'S notice of award of contract to the BIDDER, the proceeds of the security accompanying this bid shall become the property of the AGENCY and this bid and the acceptance hereof may, at the AGENCY'S option, be considered null and void.

Accompanying this proposal of bid, find Bidder's Bond in the amount of $ 500,000.00 which said amount is not less than 10% of the aggregate of the total bid price, as required by the Notice Inviting Sealed Bids, payable to the AGENCY. (Please insert the words "Cash", "Certified Check", or "Bidder's Bond", as the case may be).

Bidder shall signify receipt of all Addenda here, if any:

Addenda No.	*Date Received*	*Bidder's Signature*
1	7.19.2021	
2	7.19.2021	
3	8-3-2021	

City of Brea

COUNTRY HILLS PAVEMENT AND WATER IMPROVEMENTS
PROJECT NO. 7322

ADDENDUM NUMBER 01

July 12, 2021

Notice to All Bidders:

Please note the following **changes** have been made to the subject Bid documents:

CONTRACT DOCUMENT PLANS

a. Sheet 3 of 24 – Typical Sections

Replace Sheet 3 with revised sheet enclosed herewith.

Revised the Typical Edge Grind Detail.

b. Sheet's 20, 21, 22, and 23 of 24 – Water Improvement Plans

Replace Sheet's 20, 21, 22, and 23 with revised sheet enclosed herewith.

Updated the record document information.

CONTRACT DOCUMENT SPECIFICATIONS

a. Page C-4 – Bid Schedule

Replace Page C-4 with revised page enclosed herewith.

Removed Bid Item 24 – Traffic Striping and Markings and reassigned Bid Item 25 – Removal and Replacement of Unsuitable Subgrade to Bid Item 24.

b. Page E-30 – Bid Item Descriptions

Replace Page E-30 with revised sheet enclosed herewith.

Removed Bid Item 24 Description – Traffic Striping and Markings and reassigned Bid Item Description 25 – Removal and Replacement of Unsuitable Subgrade to Bid Item 24.

City Council **Steven Vargas** *Mayor* **Cecilia Hupp** *Mayor Pro Tem* **Christine Marick** *Council Member* **Glenn Parker** *Council Member* **Marty Simonoff** *Council Member*

Civic & Cultural Center • 1 Civic Center Circle • Brea, California 92821-5732 • 714/990-7600 • FAX 714/990-2258 • www.cityofbrea.net

Recycled Cert no SCS-COC-001182 © 1996 FSC

This Addendum does not change the bid date nor does it significantly change the Engineer's Estimate

If you have any questions or need additional information, please contact the undersigned at (714) 671-4411.

PUBLIC WORKS DEPARTMENT

Raymond Contreras
Associate Engineer

cc: Lillian Harris-Neal, City Clerk
Michael S. Ho, P.E., Public Works Deputy Director/City Engineer

This is to acknowledge receipt and review of Addendum Number 01, dated July 12, 2021.

It is understood that this document shall be incorporated in the contractor's bid. Please note: The bidder shall signify receipt of this Addendum in the Contractor's Proposal, page C-2.

ITEM #	DESCRIPTION	QUANTITY	UNIT PRICE	TOTAL
22	Abandon Existing Water Main System	1 LS	Lump Sum	
23	NPDES/BMP's	1 LS	Lump Sum	
24	Removal and Replacement of Unsuitable Subgrade	650 CY	$ /CY	
BASE BID in Figures: $				
BASE BID in Words: _____				

The BASE BID will be used to determine the lowest responsible bidder on the Project.

1. **Bidder declares that he or she has read and understands Item No. 12 of Instructions to Bidders. V.H. (Bidder Initial).**

for review and approval prior to the start of the construction. This item shall be considered full compensation for doing all work as specified herein. Progress payments for this item shall be paid for in accordance with the completion percentage of the project. No additional compensation will be allowed therefore.

Bid Item No. 24 – Removal and Replacement of Unsuitable Subgrade

Payment for Removal and Replacement of Unsuitable Subgrade shall be made at the Contract unit bid price per Cubic Yard (CY), as shown in the Bid schedule, pursuant to these Specifications and City requirements, and shall include all labor, tools, equipment and materials required for what is deemed unsuitable by the City for removal and disposal of the unsuitable material, removal of existing base material, grading, compaction, or other excavation necessary to establish the finished subgrade elevations and properly perform the construction of miscellaneous P.C.C. and water improvements including but not limited to, curb and gutter, sidewalk, curb ramps, cross gutters, driveways, water valves, fire hydrants, water mains and water services. Any costs associated with replacement of the unsuitable material per the recommendations of the soils report shall be included in the bid item. No additional compensation will be allowed therefore.

City of Brea

COUNTRY HILLS PAVEMENT AND WATER IMPROVEMENTS
PROJECT NO. 7322

ADDENDUM NUMBER 02

July 16, 2021

Notice to All Bidders:

Please note the following **changes** have been made to the subject Bid documents:

CONTRACT DOCUMENT SPECIFICATIONS

a. Page C-3 and C-4 – Bid Schedule

Replace Page C-3 and C-4 with revised page enclosed herewith.

Adjusted quantity for Bid Item 20 – Install 8" Resilient Wedge Gate Valve. Added Bid Item 25 – Furnish and Install 2-inch Blow Off Hydrant Assembly and Bid Item 26 – Remove Existing Meter and Install New 3" Irrigation Water Service & Meter.

b. Page E-30 – Bid Item Descriptions

Replace Page E-30 with revised sheet enclosed herewith.

Added Bid Item 25 – Furnish and Install 2-inch Blow Off Hydrant Assembly description and Bid Item 26 – Remove Existing Meter and Install New 3" Irrigation Water Service & Meter description.

This Addendum does not change the bid date nor does it significantly change the Engineer's Estimate

If you have any questions or need additional information, please contact the undersigned at (714) 671-4411.

PUBLIC WORKS DEPARTMENT

Raymond Contreras
Associate Engineer

cc: Lillian Harris-Neal, City Clerk
Michael S. Ho, P.E., Public Works Deputy Director/City Engineer

This is to acknowledge receipt and review of Addendum Number 02, dated July 16, 2021.

It is understood that this document shall be incorporated in the contractor's bid. Please note: The bidder shall signify receipt of this Addendum in the Contractor's Proposal, page C-2.

City Council Steven Vargas *Mayor* Cecilia Hupp *Mayor Pro Tem* Christine Marick *Council Member* Glenn Parker *Council Member* Marty Simonoff *Council Member*

Recycled Cert no SCS COC-001187 ©1996 FSC

City of Brea

COUNTRY HILLS PAVEMENT AND WATER IMPROVEMENTS
PROJECT NO. 7322

ADDENDUM NUMBER 03

July 22, 2021

Notice to All Bidders:

Please note the following **changes** have been made to the subject Bid documents:

1. **CONTRACT DOCUMENT SPECIFICATIONS**

Bid Opening date is changed to August 6, 2021, at 10:00am.

This Addendum does not significantly change the Engineer's Estimate.

If you have any questions or need additional information, please contact the undersigned at (714) 990-7667.

PUBLIC WORKS DEPARTMENT

Michael S. Ho, P.E.,
Public Works Deputy Director/City Engineer

cc: Lillian Harris-Neal, City Clerk
Raymond Contreras, Associate Engineer

This is to acknowledge receipt and review of Addendum Number 03, dated July 22, 2021.

It is understood that this document shall be incorporated in the contractor's bid. Please note: The bidder shall signify receipt of this Addendum in the Contractor's Proposal, page C-2.

City Council **Steven Vargas** *Mayor* **Cecilia Hupp** *Mayor Pro Tem* **Christine Marick** *Council Member* **Glenn Parker** *Council Member* **Marty Simonoff** *Council Member*

Civic & Cultural Center • 1 Civic Center Circle • Brea, California 92821-5732 • 714/990-7600 • FAX 714/990-2258 • www.cityofbrea.net

Recycled Cert no SCS COC-001182

BID FORM
COUNTRY HILLS SUBDIVISION PAVEMENT & WATER IMPROVEMENTS
CIP NO. 7322

Bidder: Williams Pipeline Contractors Inc

ITEM #	DESCRIPTION	QUANTITY	UNIT PRICE	TOTAL
1	Mobilization and Demobilization (5% Max)	1 LS	Lump Sum	$150,000
2	Construction Surveying and Monumentation	1 LS	Lump Sum	$50,000
3	Cold Plane	889,922 SF	$.16 /SF	$142,387.52
4	Remove and Reconstruct Curb Ramps	67 EA	$5,000 /EA	$335,000
5	Remove and Reconstruct 3' Wide Longitudinal Gutter	100 LF	$40 /LF	$4,000
6	Remove and Reconstruct Cross Gutter	2,030 SF	$30 /SF	$60,900
7	Remove and Reconstruct Curb	190 LF	$70 /LF	$13,300
8	Asphalt Concrete Overlay	11,386 TON	$77 /TON	$876,722
9	Adjust Water Valve Frame and Cover to Grade	129 EA	$525 /EA	$67,725
10	Adjust Manhole to Grade	85 EA	$500 /EA	$42,500
11	Traffic Control	1 LS	Lump Sum	$50,000
12	Traffic Striping and Markings	1 LS	Lump Sum	$12,000
13	Install 8" C-900 PVC Pipe	12,780 EA	$96 /EA	$1,226,880
14	Install New Water Meter & 1" Water Service (Short) To New Water Main	205 EA	$1,800 /EA	$369,000
15	Install New Water Meter & 1" Water Service (Long) to New Water Main	225 EA	$2,000 /EA	$450,000
16	Replace Polyethylene Service with New 1" Copper Water Service Line (Short) & Install New Water Meter	89 EA	$1,800 /EA	$160,200
17	Replace Polyethylene Service with New 1" Copper Water Service Line (Long) & Install New Water Meter	130 EA	$2,000 /EA	$260,000
18	Install New Fire Hydrant Assembly	25 EA	$6,500 /EA	$162,500
19	Install 2" Air Release Valve	9 EA	$4,000 /EA	$36,000
20	Install 8" Resilient Wedge Gate Valve	65 EA	$2,000 /EA	$130,000
21	Remove and Replace Water Meter Box	9 EA	$600 /EA	$5,400

ITEM #	DESCRIPTION	QUANTITY	UNIT PRICE	TOTAL
22	Abandon Existing Water Main System	1 LS	Lump Sum	$13,000
23	NPDES/BMP's	1 LS	Lump Sum	$10,000
24	Removal and Replacement of Unsuitable Subgrade	650 CY	$35 /CY	$22,750
25	Furnish and Install 2-inch Blow Off Hydrant Assemble	9 EA	$4,000 /EA	$36,000
26	Remove Existing Meter and Install New 3" Irrigation Water Service & Meter	5 EA	$ 21,000 /EA	$105,000
BASE BID in Figures: $ 4,791,264.52				
BASE BID in Words: FOUR MILLION SEVEN HUNDRED NINETY-ONE THOUSAND TWO HUNDRED SIXTY-FOUR AND FIFTY-TWO				

The BASE BID will be used to determine the lowest responsible bidder on the Project.

1. **Bidder declares that he or she has read and understands Item No. 12 of Instructions to Bidders. V.H. (Bidder Initial).**

LIST OF SUBCONTRACTORS

In accordance with Government Code Section 4104, the Bidder shall set forth the name, business address, license number, class and Department of Industrial Relations (DIR) registration number of each subcontractor who will perform work or render service to the bidder on said contract in an amount in excess of one-half of one percent of the total bid and the portion of the work to be done by such subcontractor.

Bid Item (s) Number	*% Portion of Work*	*Name, Address and E-mail of Subcontractor*	*State License Number*	*Class*	*DIR Registration Number*
2	1%	On Point Land Surveying 1906 Orange Tree Lane Suite 240 Redlands, CA 92374 shari@onpointlandsurveying.com	LS8133	Land Surveyor	1000003100
12	0.2 %	Interstate Striping & Signs, Inc. 9784 Poplar Ave Fontana, CA 92335 stephanie@interstate-striping.com	838618	C-32 C-33	1000007945
3,8,9,10	24%	Hardy & Harper Inc 32 Rancho Circle Lake Forest, CA 92630 thambright@hardyandharper.com	215952	A, C-8 and C12	1000000076

By submission of this proposal, the Bidder certifies:

1. That he is able to and will perform the balance of all work which is not covered in the above subcontractors listing.

2. That the AGENCY will be furnished copies of all subcontracts entered into by subcontractor for this project.

NON-COLLUSION DECLARATION
TO BE SUBMITTED WITH PROPOSAL

I, Victor Hernandez, am the
(Print Name)

Vice President of Williams Pipeline Contractors Inc ,
(Position/Title) (Name of Company)

the party making the foregoing bid that the bid is not made in the interest of, or on behalf of, any undisclosed person, partnership, company, association, organization, or corporation; that the bid is genuine and not collusive or sham; that the BIDDER has not directly or indirectly induced or solicited any other bidder to put in a false or sham bid; that the BIDDER has not directly or indirectly colluded, conspired, connived, or agreed with any bidder or anyone else to put in a sham bid, or to refrain from bidding; that the BIDDER has not in any manner, directly or indirectly, sought by agreement, communication, or conference with anyone to fix the bid price of the BIDDER or any other bidder, or to fix any overhead, profit, or cost element of the bid price, or of that of any other bidder; that all statements contained in the bid are true; and, the BIDDER has not, directly or indirectly, submitted his or her bid price or any breakdown thereof, or the contents thereof, or divulged information or data relative thereto, to any corporation, partnership, company, association, organization, bid depository, or to any member or agent thereof, to effectuate a collusive or sham bid, and has not paid, and will not pay, any person or entity for such purpose.

Any person executing this declaration on behalf of a bidder that is a corporation, partnership, joint venture, limited liability company, limited liability partnership, or any other entity, hereby represents that he or she has full power to execute, and does execute, this declaration on behalf of the BIDDER.

I declare under penalty of perjury under the Laws of the State of California that the foregoing is true and correct and that this declaration is executed on this 21 day of July, 2021.

Victor Hernandez
Name of Bidder

Signature of Bidder

10200 Sepulveda Blvd #255, Mission Hills, CA 91345
Address of Bidder

ALL- PURPOSE
CERTIFICATE OF ACKNOWLEDGMENT

A notary public or other officer completing this certificate verifies only the identity of the individual who signed the document to which this certificate is attached, and not the truthfulness, accuracy, or validity of that document.

State of California }

County of Orange }

On July 21, 2021 before me, Susan E. Morales, Notary Public,
(Here insert name and title of the officer)

personally appeared Victor Hernandez,
who proved to me on the basis of satisfactory evidence to be the person~~(s)~~ whose name~~(s)~~ is/~~are~~ subscribed to the within instrument and acknowledged to me that he/~~she/they~~ executed the same in his/~~her/their~~ authorized capacity~~(ies)~~, and that by his/~~her/their~~ signature~~(s)~~ on the instrument the person~~(s)~~, or the entity upon behalf of which the person~~(s)~~ acted, executed the instrument.

I certify under PENALTY OF PERJURY under the laws of the State of California that the foregoing paragraph is true and correct.

WITNESS my hand and official seal.

Susan E. Morales
Notary Public Signature (Notary Public Seal)

SUSAN E. MORALES
COMM. # 2279182
NOTARY PUBLIC - CALIFORNIA
ORANGE COUNTY
My Comm. Expires March 28, 2023

ADDITIONAL OPTIONAL INFORMATION

DESCRIPTION OF THE ATTACHED DOCUMENT

Bid Proposal - City of Brea
(Title or description of attached document)

Williams Pipeline Contractors, Inc.
(Title or description of attached document continued)

Number of Pages _____ Document Date 7/21/21

CAPACITY CLAIMED BY THE SIGNER

- ☐ Individual (s)
- ☑ Corporate Officer
  Vice President
  (Title)
- ☐ Partner(s)
- ☐ Attorney-in-Fact
- ☐ Trustee(s)
- ☐ Other _____

2015 Version www.NotaryClasses.com 800-873-9865

INSTRUCTIONS FOR COMPLETING THIS FORM

This form complies with current California statutes regarding notary wording and, if needed, should be completed and attached to the document. Acknolwedgents from other states may be completed for documents being sent to that state so long as the wording does not require the California notary to violate California notary law.

- State and County information must be the State and County where the document signer(s) personally appeared before the notary public for acknowledgment.
- Date of notarization must be the date that the signer(s) personally appeared which must also be the same date the acknowledgment is completed.
- The notary public must print his or her name as it appears within his or her commission followed by a comma and then your title (notary public).
- Print the name(s) of document signer(s) who personally appear at the time of notarization.
- Indicate the correct singular or plural forms by crossing off incorrect forms (i.e. ~~he~~/she/~~they,~~ is /~~are~~) or circling the correct forms. Failure to correctly indicate this information may lead to rejection of document recording.
- The notary seal impression must be clear and photographically reproducible. Impression must not cover text or lines. If seal impression smudges, re-seal if a sufficient area permits, otherwise complete a different acknowledgment form.
- Signature of the notary public must match the signature on file with the office of the county clerk.
  - Additional information is not required but could help to ensure this acknowledgment is not misused or attached to a different document.
  - Indicate title or type of attached document, number of pages and date.
  - Indicate the capacity claimed by the signer. If the claimed capacity is a corporate officer, indicate the title (i.e. CEO, CFO, Secretary).
- Securely attach this document to the signed document with a staple.

BIDDER'S STATEMENT REGARDING "ANTI-KICKBACK" REQUIREMENTS

The undersigned is submitting this proposal for performing by contract the work required by these bid documents, agrees to comply with the Copeland "Anti-Kickback" Act (18 USC 74) as supplemented in the Department of Labor regulations (29 CFR, Part 3). This act provides that each contractor or subcontractor shall be prohibited from inducing, by any means, any person employed in the construction or repair of public work, to give up any part of the compensation to which he/she is otherwise entitled.

Signed _____

Title Vice President , Victor Hernandez

Firm Williams Pipeline Contractors Inc

Date 7.21.2021

ALL- PURPOSE
CERTIFICATE OF ACKNOWLEDGMENT

A notary public or other officer completing this certificate verifies only the identity of the individual who signed the document to which this certificate is attached, and not the truthfulness, accuracy, or validity of that document.

State of California }

County of Orange }

On July 21, 2021 before me, Susan E. Morales, Notary Public,
(Here insert name and title of the officer)

personally appeared Victor Hernandez,
who proved to me on the basis of satisfactory evidence to be the person~~(s)~~ whose name~~(s)~~ is~~/are~~ subscribed to the within instrument and acknowledged to me that he~~/she/they~~ executed the same in his~~/her/their~~ authorized capacity~~(ies)~~, and that by his~~/her/their~~ signature~~(s)~~ on the instrument the person~~(s)~~, or the entity upon behalf of which the person~~(s)~~ acted, executed the instrument.

I certify under PENALTY OF PERJURY under the laws of the State of California that the foregoing paragraph is true and correct.

WITNESS my hand and official seal.

Susan E. Morales
Notary Public Signature (Notary Public Seal)

SUSAN E. MORALES
COMM. # 2279182
NOTARY PUBLIC - CALIFORNIA
ORANGE COUNTY
My Comm. Expires March 28, 2023

ADDITIONAL OPTIONAL INFORMATION

DESCRIPTION OF THE ATTACHED DOCUMENT

Bid Proposal - City of Brea
(Title or description of attached document)

Williams Pipeline Contractors, Inc.
(Title or description of attached document continued)

Number of Pages _____ Document Date 7/21/21

CAPACITY CLAIMED BY THE SIGNER

- ☐ Individual (s)
- ☑ Corporate Officer
  Vice President
  (Title)
- ☐ Partner(s)
- ☐ Attorney-in-Fact
- ☐ Trustee(s)
- ☐ Other _____

2015 Version www.NotaryClasses.com 800-873-9865

INSTRUCTIONS FOR COMPLETING THIS FORM

This form complies with current California statutes regarding notary wording and, if needed, should be completed and attached to the document. Acknolwedgents from other states may be completed for documents being sent to that state so long as the wording does not require the California notary to violate California notary law.

- State and County information must be the State and County where the document signer(s) personally appeared before the notary public for acknowledgment.
- Date of notarization must be the date that the signer(s) personally appeared which must also be the same date the acknowledgment is completed.
- The notary public must print his or her name as it appears within his or her commission followed by a comma and then your title (notary public).
- Print the name(s) of document signer(s) who personally appear at the time of notarization.
- Indicate the correct singular or plural forms by crossing off incorrect forms (i.e. ~~he~~/she/~~they,~~ is /~~are~~) or circling the correct forms. Failure to correctly indicate this information may lead to rejection of document recording.
- The notary seal impression must be clear and photographically reproducible. Impression must not cover text or lines. If seal impression smudges, re-seal if a sufficient area permits, otherwise complete a different acknowledgment form.
- Signature of the notary public must match the signature on file with the office of the county clerk.
  - Additional information is not required but could help to ensure this acknowledgment is not misused or attached to a different document.
  - Indicate title or type of attached document, number of pages and date.
  - Indicate the capacity claimed by the signer. If the claimed capacity is a corporate officer, indicate the title (i.e. CEO, CFO, Secretary).
- Securely attach this document to the signed document with a staple.

UTILITY AGREEMENT

HONORABLE MAYOR AND CITY COUNCIL
CITY OF BREA, CALIFORNIA

Gentlemen:

The undersigned hereby promises and agrees that in the performance of the work specified in the contract, known as the **COUNTRY HILLS SUBDIVISION PAVEMENT & WATER IMPROVEMENTS, CIP 7322,** (I)(we)(it) will employ and utilize only qualified persons, as hereinafter defined, to work in proximity to any electrical secondary or transmission facilities. The term "Qualified Person" is defined in Title 8, California Administrative Code, Section 2700, as follows:

"Qualified Person: *A person who, by reason of experience or instruction, is familiar with the operation to be performed and the hazards involved."*

The undersigned also promised and agrees that all such work shall be performed in accordance with all applicable electrical utility company's requirements, Public Utility Commission orders, and State of California Cal-OSHA requirements.

The undersigned further promises and agrees that the provisions herein shall be and are binding upon any subcontractor or subcontractors that may be retained or employed by the undersigned, and that the undersigned shall take steps as are necessary to assure compliance by any said subcontractor or subcontractors with the requirements contained herein.

Williams Pipeline Contractors Inc
Contractor

By Victor Hernandez

Vice President
Title

7.21.2021
Date

ALL- PURPOSE
CERTIFICATE OF ACKNOWLEDGMENT

A notary public or other officer completing this certificate verifies only the identity of the individual who signed the document to which this certificate is attached, and not the truthfulness, accuracy, or validity of that document.

State of California }

County of Orange }

On July 21, 2021 before me, Susan E. Morales, Notary Public,
(Here insert name and title of the officer)

personally appeared Victor Hernandez,
who proved to me on the basis of satisfactory evidence to be the person~~(s)~~ whose name~~(s)~~ is~~/are~~ subscribed to the within instrument and acknowledged to me that he~~/she/they~~ executed the same in his~~/her/their~~ authorized capacity~~(ies)~~, and that by his~~/her/their~~ signature~~(s)~~ on the instrument the person~~(s)~~, or the entity upon behalf of which the person~~(s)~~ acted, executed the instrument.

I certify under PENALTY OF PERJURY under the laws of the State of California that the foregoing paragraph is true and correct.

WITNESS my hand and official seal.

Susan E. Morales
Notary Public Signature

(Notary Public Seal)

SUSAN E. MORALES
COMM. # 2279182
NOTARY PUBLIC - CALIFORNIA
ORANGE COUNTY
My Comm. Expires March 28, 2023

ADDITIONAL OPTIONAL INFORMATION

DESCRIPTION OF THE ATTACHED DOCUMENT

Bid Proposal - City of Brea
(Title or description of attached document)

Williams Pipeline Contractors, Inc.
(Title or description of attached document continued)

Number of Pages _____ Document Date 7/21/21

CAPACITY CLAIMED BY THE SIGNER

- ☐ Individual (s)
- ☑ Corporate Officer
  Vice President
  (Title)
- ☐ Partner(s)
- ☐ Attorney-in-Fact
- ☐ Trustee(s)
- ☐ Other _____

2015 Version www.NotaryClasses.com 800-873-9865

INSTRUCTIONS FOR COMPLETING THIS FORM

This form complies with current California statutes regarding notary wording and, if needed, should be completed and attached to the document. Acknolwedgents from other states may be completed for documents being sent to that state so long as the wording does not require the California notary to violate California notary law.

- State and County information must be the State and County where the document signer(s) personally appeared before the notary public for acknowledgment.
- Date of notarization must be the date that the signer(s) personally appeared which must also be the same date the acknowledgment is completed.
- The notary public must print his or her name as it appears within his or her commission followed by a comma and then your title (notary public).
- Print the name(s) of document signer(s) who personally appear at the time of notarization.
- Indicate the correct singular or plural forms by crossing off incorrect forms (i.e. ~~he~~/she/~~they,~~ is /~~are~~) or circling the correct forms. Failure to correctly indicate this information may lead to rejection of document recording.
- The notary seal impression must be clear and photographically reproducible. Impression must not cover text or lines. If seal impression smudges, re-seal if a sufficient area permits, otherwise complete a different acknowledgment form.
- Signature of the notary public must match the signature on file with the office of the county clerk.
  - Additional information is not required but could help to ensure this acknowledgment is not misused or attached to a different document.
  - Indicate title or type of attached document, number of pages and date.
  - Indicate the capacity claimed by the signer. If the claimed capacity is a corporate officer, indicate the title (i.e. CEO, CFO, Secretary).
- Securely attach this document to the signed document with a staple.

DISQUALIFICATION QUESTIONNAIRE

In accordance with Government Code Section 14310.5, the Bidder shall complete, under penalty of perjury, the following questionnaire.

QUESTIONNAIRE

Has the Bidder, any officer of the Bidder or any employee of the Bidder who has a proprietary interest in the Bidder ever been disqualified, removed or otherwise prevented from bidding on or completing a Federal, State or local government project because of a violation of law or a safety regulation?

☐ Yes ☑ No

If the answer is yes, explain the circumstances in the space provided.

Note: This questionnaire constitutes a part of the Proposal, and a signature portion of the Proposal shall constitute signature of this questionnaire.

COMPENSATION INSURANCE CERTIFICATE

Pursuant to Section 1861 of the State Labor Code, each contractor to whom a public works contract has been awarded shall sign the following certificate.

I am aware of the provisions of Section 3700 of the Labor Code which require every employer to be insured against liability for worker's compensation or to undertake self-insurance in accordance with the provisions of that code, and I will comply with such provisions before commencing the performance of the work of this contract.

Williams Pipeline Contractors Inc

Contractor

By Victor Hernandez

Vice President

Title

7.21.2021

Date

ALL- PURPOSE
CERTIFICATE OF ACKNOWLEDGMENT

A notary public or other officer completing this certificate verifies only the identity of the individual who signed the document to which this certificate is attached, and not the truthfulness, accuracy, or validity of that document.

State of California }

County of Orange }

On July 21, 2021 before me, Susan E. Morales, Notary Public,
(Here insert name and title of the officer)

personally appeared Victor Hernandez,
who proved to me on the basis of satisfactory evidence to be the person~~(s)~~ whose name~~(s)~~ is/~~are~~ subscribed to the within instrument and acknowledged to me that he/~~she/they~~ executed the same in his/~~her/their~~ authorized capacity~~(ies)~~, and that by his/~~her/their~~ signature~~(s)~~ on the instrument the person~~(s)~~, or the entity upon behalf of which the person~~(s)~~ acted, executed the instrument.

I certify under PENALTY OF PERJURY under the laws of the State of California that the foregoing paragraph is true and correct.

WITNESS my hand and official seal.

Susan E. Morales
Notary Public Signature (Notary Public Seal)

SUSAN E. MORALES
COMM. # 2279182
NOTARY PUBLIC - CALIFORNIA
ORANGE COUNTY
My Comm. Expires March 28, 2023

ADDITIONAL OPTIONAL INFORMATION

DESCRIPTION OF THE ATTACHED DOCUMENT

Bid Proposal - City of Brea
(Title or description of attached document)

Williams Pipeline Contractors, Inc.
(Title or description of attached document continued)

Number of Pages _____ Document Date 7/21/21

CAPACITY CLAIMED BY THE SIGNER

- ☐ Individual (s)
- ☑ Corporate Officer
  Vice President
  (Title)
- ☐ Partner(s)
- ☐ Attorney-in-Fact
- ☐ Trustee(s)
- ☐ Other _____

2015 Version www.NotaryClasses.com 800-873-9865

INSTRUCTIONS FOR COMPLETING THIS FORM

This form complies with current California statutes regarding notary wording and, if needed, should be completed and attached to the document. Acknolwedgents from other states may be completed for documents being sent to that state so long as the wording does not require the California notary to violate California notary law.

- State and County information must be the State and County where the document signer(s) personally appeared before the notary public for acknowledgment.
- Date of notarization must be the date that the signer(s) personally appeared which must also be the same date the acknowledgment is completed.
- The notary public must print his or her name as it appears within his or her commission followed by a comma and then your title (notary public).
- Print the name(s) of document signer(s) who personally appear at the time of notarization.
- Indicate the correct singular or plural forms by crossing off incorrect forms (i.e. ~~he~~/she/~~they,~~ is /~~are~~) or circling the correct forms. Failure to correctly indicate this information may lead to rejection of document recording.
- The notary seal impression must be clear and photographically reproducible. Impression must not cover text or lines. If seal impression smudges, re-seal if a sufficient area permits, otherwise complete a different acknowledgment form.
- Signature of the notary public must match the signature on file with the office of the county clerk.
  - ❖ Additional information is not required but could help to ensure this acknowledgment is not misused or attached to a different document.
  - ❖ Indicate title or type of attached document, number of pages and date.
  - ❖ Indicate the capacity claimed by the signer. If the claimed capacity is a corporate officer, indicate the title (i.e. CEO, CFO, Secretary).
- Securely attach this document to the signed document with a staple.

BIDDER'S INFORMATION

BIDDER certifies that the following information is true and correct:

Williams Pipeline Contractors Inc
Bidder Name

P.O. Box 951030
Business Address

Mission Hills, CA 91395
City, State Zip

(805) 386-2393
Telephone Number

victor@williamspipe.com
Email Address

353528 A, C34, C36, C42
State Contractor's License No. and Class

1000003767
DIR Registration Number

03/17/1978
Original Date Issued (State Contractor's License)

8/31/2022
Expiration Date

The work site was inspected by Victor Hernandez of our office on July 13, 2021.

The following are persons, firms, and corporations having a principal interest in this proposal:

The undersigned is prepared to satisfy the Council of the City of Brea of its ability, financially or otherwise, to perform the contract for the proposed work and improvements in accordance with the plans and specifications set forth.

Williams Pipeline Contractors Inc
Company Name

Signature of Bidder

Victor Hernandez, Vice President
Printed or Typed Signature

Subscribed and sworn to before me this 21 day of July, 2021.

NOTARY PUBLIC ***See Attached CA All-Purpose Acknowledgment***

NOTARY SEAL

Listed below are the names, address and telephone numbers for three public agencies for which the bidder has performed similar work within the past two years:

1. City of Downey 11111 Brookshire Ave, Downey, CA 90241
Name and Address of Public Agency

Name and Telephone No. of Project Manager for Public Agency: Lorena Powel 562-302-3845

Contract Amount	Type of Work	Date Completed
$1,902,890	Sewer Improvement	7.16.2021

2. City of Whittier 13230 Penn Street Whittier, CA 90602
Name and Address of Public Agency

Name and Telephone No. of Project Manager for Public Agency: Lucila Martinez 562.567.9526

Contract Amount	Type of Work	Date Completed
$2,696,560	Sewer Improvement	4.16.2021

3. City of Pasadena 100 N. Garfield Ave, RM S348, Pasadena, CA 91109
Name and Address of Public Agency

Name and Telephone No. of Project Manager for Public Agency: Adolfo Vargas 626-744-4331

Contract Amount	Type of Work	Date Completed
$1,714,095	Sewer Improvement	9.25.2020

ALL- PURPOSE
CERTIFICATE OF ACKNOWLEDGMENT

A notary public or other officer completing this certificate verifies only the identity of the individual who signed the document to which this certificate is attached, and not the truthfulness, accuracy, or validity of that document.

State of California }

County of Orange }

On July 21, 2021 before me, Susan E. Morales, Notary Public,
(Here insert name and title of the officer)

personally appeared Victor Hernandez,
who proved to me on the basis of satisfactory evidence to be the person~~(s)~~ whose name~~(s)~~ is/~~are~~ subscribed to the within instrument and acknowledged to me that he/~~she/they~~ executed the same in his/~~her/their~~ authorized capacity~~(ies)~~, and that by his/~~her/their~~ signature~~(s)~~ on the instrument the person~~(s)~~, or the entity upon behalf of which the person~~(s)~~ acted, executed the instrument.

I certify under PENALTY OF PERJURY under the laws of the State of California that the foregoing paragraph is true and correct.

WITNESS my hand and official seal.

Susan E. Morales
Notary Public Signature (Notary Public Seal)

SUSAN E. MORALES
COMM. # 2279182
NOTARY PUBLIC - CALIFORNIA
ORANGE COUNTY
My Comm. Expires March 28, 2023

ADDITIONAL OPTIONAL INFORMATION

DESCRIPTION OF THE ATTACHED DOCUMENT

Bid Proposal - City of Brea
(Title or description of attached document)

Williams Pipeline Contractors, Inc.
(Title or description of attached document continued)

Number of Pages _____ Document Date 7/21/21

CAPACITY CLAIMED BY THE SIGNER

- ☐ Individual (s)
- ☑ Corporate Officer
  Vice President
  (Title)
- ☐ Partner(s)
- ☐ Attorney-in-Fact
- ☐ Trustee(s)
- ☐ Other _____

2015 Version www.NotaryClasses.com 800-873-9865

INSTRUCTIONS FOR COMPLETING THIS FORM

This form complies with current California statutes regarding notary wording and, if needed, should be completed and attached to the document. Acknolwedgents from other states may be completed for documents being sent to that state so long as the wording does not require the California notary to violate California notary law.

- State and County information must be the State and County where the document signer(s) personally appeared before the notary public for acknowledgment.
- Date of notarization must be the date that the signer(s) personally appeared which must also be the same date the acknowledgment is completed.
- The notary public must print his or her name as it appears within his or her commission followed by a comma and then your title (notary public).
- Print the name(s) of document signer(s) who personally appear at the time of notarization.
- Indicate the correct singular or plural forms by crossing off incorrect forms (i.e. ~~he~~/she/~~they,~~ is /~~are~~) or circling the correct forms. Failure to correctly indicate this information may lead to rejection of document recording.
- The notary seal impression must be clear and photographically reproducible. Impression must not cover text or lines. If seal impression smudges, re-seal if a sufficient area permits, otherwise complete a different acknowledgment form.
- Signature of the notary public must match the signature on file with the office of the county clerk.
  - ❖ Additional information is not required but could help to ensure this acknowledgment is not misused or attached to a different document.
  - ❖ Indicate title or type of attached document, number of pages and date.
  - ❖ Indicate the capacity claimed by the signer. If the claimed capacity is a corporate officer, indicate the title (i.e. CEO, CFO, Secretary).
- Securely attach this document to the signed document with a staple.

RESPONSIBLE BIDDER – SUPPLEMENTAL QUESTIONNAIRE

1. How many years has your organization been in business in California as a contractor under your present business name and license number?

   49 Years

2. Is your firm currently the debtor in a bankruptcy case?

   ☐ Yes ☑ No

   If " yes," indicate the case number, bankruptcy court, and the date on which the petition was filed.

Case Number	Bankruptcy Court	Date Filed

3. Was your firm in bankruptcy any time during the last five years? (This question refers only to a bankruptcy action that was not described in answer to question 2, above.)

   ☐ Yes ☑ No

   If " yes," indicate the case number, bankruptcy court, and the date on which the petition was filed.

Case Number	Bankruptcy Court	Date Filed

4. Has any CSLB license held by your firm or its Responsible Managing Employee (RME) or Responsible Managing Officer (RMO) been suspended within the last five years?

   ☐ Yes ☑ No

5. At any time in the last five years, has your firm been assessed and paid liquidated damages after completion of a project, under a construction contract with either a public or private owner?

   ☐ Yes ☑ No

6. Has your firm ever defaulted on a construction contract?

   ☐ Yes ☑ No

   If "yes," explain on a separate page.

7. In the last five years has your firm, or any firm with which any of your company's owners, officers or partners was associated, been debarred, disqualified, removed or otherwise prevented from bidding on, or completing, any government agency or public works project for any reason?

   ☐ Yes ☑ No

   If "yes," explain on a separate page. State the name of the organization debarred, the year of the event, the owner of the project, and the basis for the action.

8. In the last five years, has your firm been denied an award of a public works contract based on a finding by a public agency that your company was not a responsible bidder?

   ☐ Yes ☑ No

   If "yes," on a separate page identify the year of the event, the entity denied the award, the owner, the project, and the basis for the finding by the public agency.

9. In the past five years, has any claim against your firm concerning your firm's work on a construction project, been filed in court or arbitration?

   ☐ Yes ☑ No

   If "yes," on a separate page identify the claim(s) by providing the project name, date of the claim, name of the claimant, the name of the entity the claim was filed against, a brief description of the nature of the claim, the court and case number, and a brief description of the status of the claim (pending or, if resolved, a brief description of the resolution).

10. In the past five years, has your firm made any claim against a project owner concerning work on a project or payment for a contract, and filed that claim in court or arbitration?

    ☐ Yes ☑ No

    If "yes," on a separate page identify the claim be providing the name of claimant, the project name, date of the claim, name of the entity (or entities) against whom the claim was filed, a brief description of the nature of the claim, the court and case number, and a brief description of the status of the claim (pending, or if resolved, a brief description of the resolution.

11. At any time during the past five years, has any surety company made any payments on your firm's behalf as a result of a default, to satisfy any claims made against a performance or payment bond issued on your firm's behalf in connection with a construction project, either public or private?

    ☐ Yes ☑ No

12. In the last five years, has any insurance carrier, for any form of insurance, refused to renew the insurance policy for your firm?

    ☐ Yes ☑ No

13. Has your firm, or any of its owners, officers, or partners ever been liable in a civil suit, or found guilty in a criminal action, for making any false claim or material misrepresentation to any public agency or entity?

☐ Yes ☑ No

14. Has your firm, or any of its owners, officers or partners ever been convicted of a crime involving any federal, state, or local law related to construction?

☐ Yes ☑ No

If "yes," explain on a separate page, including identifying who was convicted, the name of the victim, the date of the conviction, the court and case number, the crimes, and the grounds for the conviction.

15. Has your firm or any of its owners, officers or partners ever been convicted of a federal or state crime of fraud, theft, or any other act of dishonesty?

☐ Yes ☑ No

If "yes," identify on a separate page, the person or persons convicted, the court and case number, the crimes, and the year convicted.

16. If your firm was required to pay a premium of more than one per cent for a performance and payment bond on any project(s) on which your firm worked at any time during the last three years, state the percentage that your firm was required to pay. You may provide an explanation for a percentage rate higher than one per cent, if you wish to do so.

%

17. During the last five years, has your firm ever been denied bond credit by a surety company, or has there ever been a period of time when your firm has no surety bond in place during a public construction project when on was required?

☐ Yes ☑ No

18. Has CAL OSHA cited and assessed penalties against the General Contractor or its associates for any "serious," "willful" or "repeat" violations of its safety or health regulations in the past five years?

(Note: If you have filed an appeal of a citation, and the Occupational Safety and Health Appeals Board has not yet ruled on your appeal, you need not include information about it.)

☐ Yes ☑ No

If "yes," on separate page describe the citations, the party against whom the citation was made, date of citation, nature of the violation, project on which the citation was issued, owner of project, and the amount of penalty paid, if any. State the case number and date of any OSHAB decision.

19. Has the Federal Occupational Safety and Health Administration cited and assessed penalties against the General Contractor or its associates in the past five years?

(Note: If an appeal of the citation has been filed and the Appeals Board has not yet ruled, or there is a court appeal pending, you need not include information about the citation.)

☐ Yes ☑ No

If "yes," on separate page describe the citation, the party against whom the citation was made, date of citation, nature of the violation, project on which the citation was issued, owner of project, and the amount of penalty paid, if any. State the case number and date of any decision.

20. Has there been more than one occasion during the last five years in which the General Contractor or its associates was required to pay either back wages or penalties for failure to comply with the **state's** prevailing wage laws?

☐ Yes ☑ No

If "yes," on separate page, describe the violator, nature of each violation, name of the project, date of its completion, the public agency for which it was constructed, the number of employees who were initially underpaid an the amount of back wages and penalties that were assessed.

21. During the last five years, has there been more than one occasion in which the General Contractor or its associates have been penalized or required to pay back wages for failure to comply with the Federal Davis-Bacon prevailing wage requirements?

☐ Yes ☑ No

If "yes," on separate page, describe the violator, nature of each violation, name of the project, date of its completion, the public agency for which it was constructed, the number of employees who were initially underpaid an the amount of back wages and penalties that were assessed.

Inaccurate response to this questionnaire could result in bidder's proposal being non-responsive.

BID BOND

KNOW ALL MEN BY THESE PRESENTS, THAT WE Williams Pipeline Contractors, Inc. as PRINCIPAL, and North American Specialty Insurance Company as SURETY, are held and firmly bound unto the CITY OF BREA, CALIFORNIA, hereinafter referred to as the "City", in the penal sum of ten percent (10%) of the total amount of the bid of the principal above named, submitted by said principal to said City, for the work described below, for payment of which sum in lawful money of the United States of America, well and truly to be made, we bind ourselves, our heirs, executors, administrators and successors, jointly and severally, firmly by these presents.

In no case shall the liability of the surety hereunder exceed the sum of $ 10% of the Bid Amount. THE CONDITIONS OF THIS OBLIGATION ARE SUCH, that whereas, said Principal has submitted the same mentioned bid to said City, for construction of the work under the City's specification entitled " Country Hills Pavement & Water Improvements, Project #7322

"For which bids are to be opened in the Conference Center of the City Hall of said City at 2 PM on August 6th at 10:00 AM, 2021.

NOW, THEREFORE, if said Principal is awarded the contract, and within the time and manner required under the heading "Instructions to Bidders", after the prescribed forms are presented to him for signature, enters into a written contract, in the form of agreement bound herein, in accordance with the bid, and files the two bonds with said City, one to guarantee faithful performance and the other to guarantee payment for labor and materials, then this obligation shall be null and void; otherwise, it shall be and remain in full force and effect until released by the City.

In the event suit is brought upon this bond by the Obligee and judgment is recovered, said Surety shall pay all costs incurred by the Obligee in such suit, including a reasonable attorney's fee to be fixed by the court.

IN WITNESS WHEREOF, we have hereunto set our hands and seals this 2nd day of August, 2021.

Williams Pipeline Contractors, Inc.
Principal

By: _____
Victor Hernandez, Vice President

North American Specialty Insurance Company
Surety

By: _____
Shane Wolf, Attorney-in-Fact

BID BOND
ACKNOWLEDGMENT OF SURETY

A notary public or other officer completing this certificate verifies only the identity of the individual who signed the document to which this certificate is attached, and not the truthfulness, accuracy, or validity of that document.

ACKNOWLEDGMENT

State of California)
County of _____)
)

On _____ before me, _____
_____
(insert name and title of the officer)

personally appeared _____
_____,

who proved to me on the basis of satisfactory evidence to be the person(s) whose name(s) is/are subscribed to the within instrument and acknowledged to me that he/she/they executed the same in his/her/their authorized capacity(ies), and that by his/her/their signature(s) on the instrument the person(s), or the entity upon behalf of which the person(s) acted, executed the instrument.

I certify under PENALTY OF PERJURY under the laws of the State of California that the foregoing paragraph is true and correct.

WITNESS my hand and official seal.

Signature ***See Attached CA All-Purpose Acknowledgment*** (Seal)
Signature of Notary Public

ALL- PURPOSE
CERTIFICATE OF ACKNOWLEDGMENT

A notary public or other officer completing this certificate verifies only the identity of the individual who signed the document to which this certificate is attached, and not the truthfulness, accuracy, or validity of that document.

State of California }

County of Orange }

On August 2, 2021 before me, Susan E. Morales, Notary Public,
(Here insert name and title of the officer)

personally appeared Victor Hernandez,
who proved to me on the basis of satisfactory evidence to be the person~~(s)~~ whose name~~(s)~~ is/~~are~~ subscribed to the within instrument and acknowledged to me that he/~~she/they~~ executed the same in his/~~her/their~~ authorized capacity~~(ies)~~, and that by his/~~her/their~~ signature~~(s)~~ on the instrument the person~~(s)~~, or the entity upon behalf of which the person~~(s)~~ acted, executed the instrument.

I certify under PENALTY OF PERJURY under the laws of the State of California that the foregoing paragraph is true and correct.

WITNESS my hand and official seal.

Susan E. Morales
Notary Public Signature (Notary Public Seal)

INM1 SUSAN E. MORALES
COMM. # 2279182
NOTARY PUBLIC - CALIFORNIA
ORANGE COUNTY
My Comm. Expires March 28, 2023 INM1

ADDITIONAL OPTIONAL INFORMATION

DESCRIPTION OF THE ATTACHED DOCUMENT

Bid Bond
(Title or description of attached document)

Williams Pipeline Contractors, Inc.
(Title or description of attached document continued)

Number of Pages 1 Document Date 8/2/21

CAPACITY CLAIMED BY THE SIGNER

- ☐ Individual (s)
- ☑ Corporate Officer
  Vice President
  (Title)
- ☐ Partner(s)
- ☐ Attorney-in-Fact
- ☐ Trustee(s)
- ☐ Other _____

2015 Version www.NotaryClasses.com 800-873-9865

INSTRUCTIONS FOR COMPLETING THIS FORM

This form complies with current California statutes regarding notary wording and, if needed, should be completed and attached to the document. Acknolwedgents from other states may be completed for documents being sent to that state so long as the wording does not require the California notary to violate California notary law.

- State and County information must be the State and County where the document signer(s) personally appeared before the notary public for acknowledgment.
- Date of notarization must be the date that the signer(s) personally appeared which must also be the same date the acknowledgment is completed.
- The notary public must print his or her name as it appears within his or her commission followed by a comma and then your title (notary public).
- Print the name(s) of document signer(s) who personally appear at the time of notarization.
- Indicate the correct singular or plural forms by crossing off incorrect forms (i.e. ~~he~~/she/~~they,~~ is /~~are~~) or circling the correct forms. Failure to correctly indicate this information may lead to rejection of document recording.
- The notary seal impression must be clear and photographically reproducible. Impression must not cover text or lines. If seal impression smudges, re-seal if a sufficient area permits, otherwise complete a different acknowledgment form.
- Signature of the notary public must match the signature on file with the office of the county clerk.
  - Additional information is not required but could help to ensure this acknowledgment is not misused or attached to a different document.
  - Indicate title or type of attached document, number of pages and date.
  - Indicate the capacity claimed by the signer. If the claimed capacity is a corporate officer, indicate the title (i.e. CEO, CFO, Secretary).
- Securely attach this document to the signed document with a staple.

ALL- PURPOSE
CERTIFICATE OF ACKNOWLEDGMENT

A notary public or other officer completing this certificate verifies only the identity of the individual who signed the document to which this certificate is attached, and not the truthfulness, accuracy, or validity of that document.

State of California }

County of Orange }

On August 2, 2021 before me, Susan E. Morales, Notary Public,
(Here insert name and title of the officer)

personally appeared Shane Wolf,
who proved to me on the basis of satisfactory evidence to be the person~~(s)~~ whose name~~(s)~~ is/~~are~~ subscribed to the within instrument and acknowledged to me that he/~~she/they~~ executed the same in his/~~her/their~~ authorized capacity~~(ies)~~, and that by his/~~her/their~~ signature~~(s)~~ on the instrument the person~~(s)~~, or the entity upon behalf of which the person~~(s)~~ acted, executed the instrument.

I certify under PENALTY OF PERJURY under the laws of the State of California that the foregoing paragraph is true and correct.

WITNESS my hand and official seal.

Susan E. Morales
Notary Public Signature (Notary Public Seal)

SUSAN E. MORALES
COMM. # 2279182
NOTARY PUBLIC - CALIFORNIA
ORANGE COUNTY
My Comm. Expires March 28, 2023
INM1 INM1

ADDITIONAL OPTIONAL INFORMATION

DESCRIPTION OF THE ATTACHED DOCUMENT

Bid Bond
(Title or description of attached document)

North American Specialty Insurance Co.
(Title or description of attached document continued)

Number of Pages 1 Document Date 8/2/21

CAPACITY CLAIMED BY THE SIGNER

- ☐ Individual (s)
- ☐ Corporate Officer
  _____
  (Title)
- ☐ Partner(s)
- ☑ Attorney-in-Fact
- ☐ Trustee(s)
- ☐ Other _____

INSTRUCTIONS FOR COMPLETING THIS FORM

This form complies with current California statutes regarding notary wording and, if needed, should be completed and attached to the document. Acknolwedgents from other states may be completed for documents being sent to that state so long as the wording does not require the California notary to violate California notary law.

- State and County information must be the State and County where the document signer(s) personally appeared before the notary public for acknowledgment.
- Date of notarization must be the date that the signer(s) personally appeared which must also be the same date the acknowledgment is completed.
- The notary public must print his or her name as it appears within his or her commission followed by a comma and then your title (notary public).
- Print the name(s) of document signer(s) who personally appear at the time of notarization.
- Indicate the correct singular or plural forms by crossing off incorrect forms (i.e. ~~he~~/she/~~they,~~ is /~~are~~) or circling the correct forms. Failure to correctly indicate this information may lead to rejection of document recording.
- The notary seal impression must be clear and photographically reproducible. Impression must not cover text or lines. If seal impression smudges, re-seal if a sufficient area permits, otherwise complete a different acknowledgment form.
- Signature of the notary public must match the signature on file with the office of the county clerk.
  - ❖ Additional information is not required but could help to ensure this acknowledgment is not misused or attached to a different document.
  - ❖ Indicate title or type of attached document, number of pages and date.
  - ❖ Indicate the capacity claimed by the signer. If the claimed capacity is a corporate officer, indicate the title (i.e. CEO, CFO, Secretary).
- Securely attach this document to the signed document with a staple.

SWISS RE CORPORATE SOLUTIONS

NORTH AMERICAN SPECIALTY INSURANCE COMPANY
WASHINGTON INTERNATIONAL INSURANCE COMPANY

GENERAL POWER OF ATTORNEY

KNOW ALL MEN BY THESE PRESENTS, THAT North American Specialty Insurance Company, a corporation duly organized and existing under laws of the State of New Hampshire, and having its principal office in the City of Kansas City, Missouri, and Washington International Insurance Company, a corporation organized and existing under the laws of the State of New Hampshire and having its principal office in the City of Kansas City, Missouri, each does hereby make, constitute and appoint:

TODD M. ROHM, CATHY S. KENNEDY, BEATA A. SENSE, CHERYL L. THOMAS, and SHANE WOLF

JOINTLY OR SEVERALLY

Its true and lawful Attorney(s)-in-Fact, to make, execute, seal and deliver, for and on its behalf and as its act and deed, bonds or other writings obligatory in the nature of a bond on behalf of each of said Companies, as surety, on contracts of suretyship as are or may be required or permitted by law, regulation, contract or otherwise, provided that no bond or undertaking or contract or suretyship executed under this authority shall exceed the amount of:

FIFTY MILLION ($50,000,000.00) DOLLARS

This Power of Attorney is granted and is signed by facsimile under and by the authority of the following Resolutions adopted by the Boards of Directors of both North American Specialty Insurance Company and Washington International Insurance Company at meetings duly called and held on the 9th of May, 2012:

"RESOLVED, that any two of the Presidents, any Managing Director, any Senior Vice President, any Vice President, any Assistant Vice President, the Secretary or any Assistant Secretary be, and each or any of them hereby is authorized to execute a Power of Attorney qualifying the attorney named in the given Power of Attorney to execute on behalf of the Company bonds, undertakings and all contracts of surety, and that each or any of them hereby is authorized to attest to the execution of any such Power of Attorney and to attach therein the seal of the Company; and it is

FURTHER RESOLVED, that the signature of such officers and the seal of the Company may be affixed to any such Power of Attorney or to any certificate relating thereto by facsimile, and any such Power of Attorney or certificate bearing such facsimile signatures or facsimile seal shall be binding upon the Company when so affixed and in the future with regard to any bond, undertaking or contract of surety to which it is attached."

NORTH AMERICAN SPECIALTY INSURANCE COMPANY CORPORATE SEAL 1973 NEW HAMPSHIRE

By _____
Steven P. Anderson, Senior Vice President of Washington International Insurance Company
& Senior Vice President of North American Specialty Insurance Company

By _____
Michael A. Ito, Senior Vice President of Washington International Insurance Company
& Senior Vice President of North American Specialty Insurance Company

WASHINGTON INTERNATIONAL INSURANCE COMPANY CORPORATE SEAL NEW HAMPSHIRE

IN WITNESS WHEREOF, North American Specialty Insurance Company and Washington International Insurance Company have caused their official seals to be hereunto affixed, and these presents to be signed by their authorized officers this 20th day of JULY, 2021.

North American Specialty Insurance Company
Washington International Insurance Company

State of Illinois
County of Cook ss:

On this 20th day of JULY, 2021, before me, a Notary Public personally appeared Steven P. Anderson, Senior Vice President of Washington International Insurance Company and Senior Vice President of North American Specialty Insurance Company and Michael A. Ito, Senior Vice President of Washington International Insurance Company and Senior Vice President of North American Specialty Insurance Company, personally known to me, who being by me duly sworn, acknowledged that they signed the above Power of Attorney as officers of and acknowledged said instrument to be the voluntary act and deed of their respective companies.

OFFICIAL SEAL
M. KENNY
Notary Public - State of Illinois
My Commission Expires
12/04/2021

M. Kenny, Notary Public

I, Jeffrey Goldberg, the duly elected Senior Vice President and Assistant Secretary of North American Specialty Insurance Company and Washington International Insurance Company, do hereby certify that the above and foregoing is a true and correct copy of a Power of Attorney given by said North American Specialty Insurance Company and Washington International Insurance Company, which is still in full force and effect.

IN WITNESS WHEREOF, I have set my hand and affixed the seals of the Companies this 2nd day of AUGUST, 2021.

Jeffrey Goldberg, Senior Vice President & Assistant Secretary of
Washington International Insurance Company & North American Specialty Insurance Company

City of Brea

COUNCIL COMMUNICATION

TO: Honorable Mayor and City Council Members

FROM: Bill Gallardo, City Manager

DATE: 08/17/2021

SUBJECT: Purchase of Two (2) Generac Industrial Diesel Generators

RECOMMENDATION

Authorize purchase of two (2) Generac industrial diesel engine-driven generators for Booster Pump Stations Nos. 2 and 3 for not-to-exceed amount of $103,045.31.

BACKGROUND/DISCUSSION

Booster Pump Stations Nos. 2 and 3 are located along Carbon Canyon Road/State Route 142 in the easterly side of Brea. These facilities are connected to a City water transmission main and pump water to nearby City reservoirs or water mains in order to store the water at the reservoirs or deliver potable water to residents along Carbon Canyon Road and Olinda Village.

Over the years, concerns were raised regarding the ability to operate these pump stations when electric power was unavailable. In those situations, staff would rent portable generators in order to provide continuous power during an emergency or power shutoff. Portable generators are a good temporary solution, but are not practical if physical access to the site is unavailable such as during an active wildfire.

In order to permanently address the concern, two projects were added to previous Capital Improvement Programs, New Booster 2 Pump Station (CIP #7475) and Booster 3 Reconstruction (CIP #7470). The New Booster 2 facility will now be located at Olinda Ranch Park, while Booster 3 will remain at its current location approximately one-mile northeast of Olinda Village. Both of these projects will include pump station buildings that will house all pump station equipment and permanent diesel generators.

Design for both of these booster station projects is nearing completion. However, securing final easements from existing nearby property owners and utility companies has resulted in some delays, but are nearing completion as well. Final easements are expected to be brought to City Council for approval within the next couple of months. Staff expects to advertise for bids in the late Fall of this year with construction expected to start in winter when water demand and fire risk is at its lowest.

Since the generators have an estimated 15-week lead time for delivery, staff is recommending purchasing them ahead of bidding to avoid any additional delays and to prevent general contractors from marking-up the equipment if they had to purchase them as part of the projects. Staff utilized the General Services Administration (GSA) contract with Generac and obtained the lowest possible price of $103,045.31.

COMMISSION/COMMITTEE RECOMMENDATION

The Finance Committee reviewed staff's recommendation at their August 10, 2021 meeting and recommended for Council approval.

FISCAL IMPACT/SUMMARY

Sufficient funds for the purchase of the generators are available in the Capital Improvement Program budgets for Booster Pump Stations Nos. 2 and 3. There is no impact to the General Fund.

RESPECTFULLY SUBMITTED:

William Gallardo, City Manager
Prepared by: Brian M. Ingallinera, Environmental Services Coordinator
Concurrence: Rudy Correa, Water Distribution Superintendent
Tony Olmos, P.E., Public Works Director

Attachments

Quote-BP2

Quote-BP3

Date: April 23, 2021, Updated validity date 5/24/21

Eric Aulls
City of Brea
1 Civic Center Circle
Brea, CA 92821

Reference: City of Brea Carbon Canyon BPS 2, Generac Quote 20463585

We are pleased to offer the following quote for the above project:

Quantity 1 - Generac Industrial diesel engine-driven generator set with turbocharged/aftercooled 6-cylinder 8.7L engine, consisting of the following features and accessories:

- Stationary Emergency-Standby rated
- 250 kW Rating, wired for 277/480 VAC three phase, 60 Hz
- No Enclosure (open-set)
- UL2200
- EPA Certified
- SCAQMD
- H-100 Control Panel
    - Meets NFPA 99 and 110 requirements
    - Temp Range -40 to 70 degrees C
    - Digital Microprocessor:
        - Two 4-line x 20 displays, full system status
        - 3 Phase sensing, +/-0.25% digital voltage regulation
        - RS232, RS485 and Canbus remote ports
        - Waterproof connections
        - All engine sensors are 4-20ma for minimal interference
        - Programmable I/O
        - Built-in PLC for special applications
    - Engine function monitoring and control:
        - Full range standby operation; programmable auto crank, Emergency Stop, Auto-Off-Manual switch
        - Isochronous Governor, +/-0.25% frequency regulation
        - Full system status on all AC output and engine function parameters
        - Service reminders, trending, fault history (alarm log)
        - I2T function for full generator protection
        - Selectable low-speed exercise
    - HTS transfer switch function monitoring and control
    - 2-wire start controls for any 2-wire transfer switch
- 21 Light Annunciator - Surface
- Remote Emergency Stop Switch, Break-Glass, shipped loose
- 110 AH, 925 CCA Group 31 Batteries, with rack, installed
- Standard MLCB, 80% rated thermal-magnetic
    - 450 Amp
    - Shunt trip and Auxiliary Contacts
- Battery Charger, 10 Amp, NFPA 110 compliant, installed
- Coolant Heater, 1500W, 208 V

- 24 hour fuel tank with 12” normal vent; 2” overfill protection valve with locing cap, this valve will reduce the useable gallons of the fuel tank, overfill protection valve to have scully connector, set shut off at 95%; and 5 gallon fill/spill containment system (open market)
- Seismic isolators by Mason Industries mounted between base frame and engine/alternator assembly. (open market)
- Certified seismic type SASE-SS anchor bolts and washers to mount unit to concrete pad are shipped loose open market).
- Certified seismic calculations done by seismic isolator vendor. One set of calculations required per site. Seismic qualification/calculations site information form to be completed and submitted at time of order. Seismic certificate of compliance per IBC 2012 Section 1708.5. One certificate required per rating. Certification is based on calculations and not sharker table testing (open market).
- Std set of 3 Manuals
- Engine Run Relay
- Critical Muffler flange ShpLse
- Standard 2-Year Limited Warranty
- SD0250KG178.7D18HPNL3

Total investment for the above equipment (Not including any applicable tax or freight):	**$50,066.49**
Startup and Test by local authorized Generac Industrial Distributor:	$ 2,090.00
Optional 4 hour load bank test:	$ 1,100.00
Freight from factory to Brea, CA:	$ 4,837.00

Generac’s local distributor offers air quality permitting services and generator maintenance agreements. Please inquire with your Generac/Distributor representative if interested.

SPECIAL ADVISORY NOTICE

SOUTH COAST AIR QUALITY MANAGEMENT DISTRICT APPLICATIONS

The South Coast Air Quality Management District (SCAQMD) in southern California is undergoing a change to their Rule 1470 which governs stationary compression-ignition/diesel engines in stationary emergency electrical generating sets which will go into effect Jan. 1, 2013. The change to Rule 1470 will involve modifications to administrative and performance requirements, which affect the installation and operation of the generating set. Generators with a stack located within 50 meters of a sensitive receptor will require a diesel particulate filter. This device is not included in this quotation unless noted.

While generating sets produced by Generac Power Systems include the latest EPA-certified compression-ignition/diesel engines allowed for use in stationary emergency applications, special localized requirements may be added and are generally administered through an equipment site permitting process, including a Permit to Construct and Permit to Operate by the air district.

The final SCAQMD Rule 1470 requirements require the addition of a CARB-verified diesel particulate filter device to the exhaust system of the standard federally-compliant engine used on the generating set if the stack is located within 50 meters of a sensitive receptor.

This notice is to alert purchasers and owners/operators of this equipment to this recent development, and that issuance and acceptance of this quotation does not constitute a guarantee by Generac Power Systems or their local distributor of product conformance or instability within the region of SCAQMD jurisdiction or anywhere else that may add additional regulatory requirements during the permitting phases. Generac’s local distributor can provide a quotation to add the necessary diesel particulate filters to comply with SCAQMD’s new requirements of Rule 1470 modifications.

Terms and Conditions

Terms and conditions as listed on GSA Contract # GS-07F-0407X unless otherwise negotiated. Net 30 days, subject to review and approval by our Credit Dept. Payment obligations are not dependent or contingent upon the manner in which purchaser may receive payment from others. No retainage against this order will be permitted unless agreed to ahead of time. Warranty is invalid without factory start up.

Startup will be done during normal business hours. Additional charges will be applied to startups requested on weekends or off normal business hours. Startup is quoted as an open market item.

Prices valid through September 30, 2021. Note, items quoted as open market items are offered at most favorable customer pricing.

Estimated Delivery: 13-15 weeks ARO subject to change. Please confirm with factory at time of order.
FOB: Pre Pay/Origin

GSA Contract# GS-07F-0407X
DUNS 006103055
CAGE 3KDJ8

ACCEPTANCE
All quotations are subject to prompt acceptance and transmittal of order. Prices are subject to change without notice unless otherwise stated. Contracts and agreements are not valid unless approved and accepted in writing in the corporate office in Waukesha, WI. However, all contracts shall be deemed to have been executed in Wisconsin.

DELIVERIES
Promises of delivery are given as accurately as conditions will permit, but seller does not guarantee to accomplish shipments on date or dates mentioned.

DELAYS
Deliveries under all contracts and agreements are contingent upon acts of providence, strikes, accidents, governmental priority regulations and other causes of delay beyond the seller's control, and in no event will the seller by liable for consequential delays or losses.

DELAYS OF PAYMENT TO THE SELLER
Payment is due to Generac upon the agreed terms as listed in the quote. Generac is responsible for providing the equipment and services as listed in the quote and is not an installation contractor. Generac is not responsible for cancelations or delays in construction, equipment not being ready for startup as scheduled, improper installation per the equipment installation guidelines, not possessing the proper permits, not meeting NEC, NFPA or any other local or national codes as it pertains to the equipment installation. A fee will be charged of 3% of the equipment cost per month beyond 15 days of the terms listed in the quote for delays in payment for any of the listed reasons. No retention of any portion allowed unless noted in this quotation

NOT A CONTRACTOR
Generac is a supplier of materials and related services as listed in this quote. Generac is not a contractor. Generac is not responsible for any part of the installation of the supplied equipment, including but not limited to the following: permits, meeting installation codes, pouring concrete, building of generator room, plumbing, piping, fuel, proper fuel supply, exhaust system installation, proper ducting, insulation, wiring, mounting, field painting, or anchoring of equipment.

CANCELLATIONS
Orders cannot be scheduled, cancelled, specifications changed or goods returned without seller's prior permission. Acceptance is conditional upon reimbursement for consequential loss to the seller. Change order costs will be quoted by the seller at the time of change. Some change orders may not be possible depending on when changes are requested during production of the order. A minimum 30% restocking fee will be charged for any and all cancelled orders if accepted by the seller. Special orders may not be accepted by the seller for return.

STORAGE FEES
Units stored beyond 15 days of originally scheduled delivery date will be charged 3% of the sell price per month.

SHIPMENT
Off loading and placement of the goods shall be solely your responsibility. All deliveries are Monday through Friday 9:00 a.m. to 3:00 p.m. Second attempt deliveries or deliveries outside normal business hours will be invoiced as necessary. Deliveries to customer's site are subject to standby fees if the truck is not unloaded within one (1) hour of arrival at the customer's site. A standby fee of $135.00 per hour will be charged for each hour the truck has to wait to be unloaded.

STARTUP & TEST
Generac's local distributor will perform one (1) initial Startup & Test upon completion of installation by others if included in the quote. They will not perform a Startup & Test until you have properly completed the installation and returned the completed Installation Check List to the local distributor. Startup & Test conducted during normal business hours as listed above. Fuel for testing and filling is not included unless as noted in this quote. Startup & Test outside normal business hours will be invoiced as necessary.
1. One Startup & Test service call to the jobsite is included unless noted. Additional trips due to jobsite conditions beyond our control will be invoiced as necessary; this includes second trips because of improper or incomplete installation issues.
2. Start & Test will be conducted per specifications and using available building load unless noted. Building load should be available during startup & test so the generator can be adjusted properly for the building load. Additional trips to test with building load will be invoiced as necessary.

PERMITS AND LICENSES
Permit costs (including Air Quality/SCAQMD) are not included in this quote unless noted as such on the quote. Generac's local distributor can assist in providing information as may be necessary for the acquisition of permits and licenses. Generac's local distributor offers air quality permitting services at an additional charge if needed.

PURCHASE OR LEASE ORDER POLICY
Orders will be placed when the signed quotations and purchase orders or lease documents are returned to Generac.

WARRANTIES
The seller's liability is limited to making good defects in workmanship or material under the manufacturer's warranty and shall not exceed the purchase price of the defective item. The seller in no event shall be liable for damages to persons or property arising out of the use of items sold. The equipment must have reasonable means and access for warranty repair to be done. This includes the means and access for removal of the complete generator assembly and/or major components. If reasonable access is not provided, additional charges not covered by warranty will apply. This warranty supersedes all prior assurances, written or oral made by the seller, its agents or representatives.

PERFORMANCES
Information provided concerning performance of equipment listed hereon are engineering estimates only and no guarantee to meet such specifications is to be implied.

CONFIDENTIAL INFORMATION
This proposal as well as all information therein, including prints, brochures, etc., are confidential and intended only for the purchaser's use and are not to be used in any way detrimental to the seller.

TERMS OF THE SALE

This quotation is governed by and subject to Generac's Quotation Terms and Conditions located at *www.generac.com/about-us/customer-support* which are incorporated by reference. Generac's Quotation Terms and Conditions are subject to change at any time and Buyer is advised to review the same before acceptance of future orders. Unless pursuant to a written agreement mutually executed by both parties, the terms of this Quotation shall be binding upon the parties, and any other terms, communications or documents concerning this order are to be disregarded and hereby expressly rejected.

Unless otherwise specifically stated, terms are net on invoice based on the date of invoice. F.O.B. delivered, sales or use taxes, any type of property tax or any manufacturer's or other excise tax levied by federal, state or municipal government or any sub-division thereof, are the liability of the purchaser and if paid by the seller are rechargeable to the purchaser. All sales are subject to the approval of our credit department. This and all subsequent purchases are payable to Generac Power System, Inc. The seller reserves the right to cancel this contract and collect fees as noted in “cancellations” upon:
1. Breach of contract by the purchaser.
2. Failure by purchaser to make payments as required.
3. Insolvency or bankruptcy of the purchaser the seller may require advance payment for security or may cancel an order if the seller, in good faith, doubts the purchaser’s ability to pay in general.
No terms contained in the purchaser's purchase order, shipping request or other communications shall vary the terms and conditions of this agreement, expressed herein, whether or not shipment of the goods followed receipt of such purchase order or any other communication.

Sincerely,

Lynn S. Jones, CTSM
Account Manager - Government Sales

Acceptance of Quote

Prior to ordering equipment or services, please sign and return as a confirmation of the above terms and conditions

Engineering Submittal Package

City of Brea, CBS #2

Prepared and Submitted by:
Lynn Jones
Account Manager - Government Sales
Generac
920-230-1280
lynn.jones@generac.com
www.generac.com

Table of Contents

SPECIFICATION SHEET	
0K5099	SD250 8.7L
CONTROL PANEL AND OPTIONS	
0161920SBY	10 AMP ENGINE-RUN RELAY
0172110SBY	SPEC SHEET H-100 CONTROL PANEL
0604160SSD	21-LIGHT/RELAY PANEL DATA
ALTERNATOR AND OPTIONS	
0183450SSD	G26 ALT DATA SHEET 250 KW
0187980SBY	GENPROTECT DATA SHEET
UNIT OPTIONS	
0161970SBY	BATTERY INDEX
0180230SBY	SPEC SHEET RHINO COAT
0189370SSD	EATON CB TABLE THERM/MAG
0191900SBY	2.5A & 10A BATT CHRGR H&G
0192390SSD	EATON CB LUG DATA
065803_SBM	CRIT MUFFLER 5 FLANG
084918N_SBM	HEATER BLOCK 2000W 240V
0A5215D_SBM	FLEX PIPE 4"
0H4983_SBM	EV EXHAUST OPEN SET

0L6262	E STOP BRK GLS H PNL SUBM

INSTALLATION DRAWINGS

0J3429	INSTALL D8.7L OPEN SET E-GRP

GENSET ELECTRICAL DRAWINGS

0H9867	WD D8.7/10.3/12.9L G17 H-PANEL
0H9868	SD D8.7/10.3/12.9L G17 H-PANEL

SYSTEM INTERCONNECT DRAWINGS

0191120SSD	INTERCONNECT DIAG H PANEL

EMISSIONS DATA

0185960SSD	SOUND DATA SD250 8.7L
A0001316715	EMISSIONS SD250 D8.7 2021
A0001350200	MFPXL08.7TR3_004

CERTIFICATIONS

0184520SSD	QUALITY CERTIFICATION DOC
0K3486	STANDARD 2B WARRANTY
0K8347	ISO CERTIFICATE 9001 : 20
A0000083490	2019 EPA CERT KFPXL08.7TR3-006
A0000519420	2020 EPA CERT LFPXL08.7TR3-003
EMSNWRNTY003	EPA WARRANTY STATEMENT US

SD250 | 8.7L | 250 kW

INDUSTRIAL DIESEL GENERATOR SET

EPA Certified Stationary Emergency

GENERAC® INDUSTRIAL POWER

Standby Power Rating
250 kW, 313 kVA, 60 Hz

Prime Power Rating*
225 kW, 281 kVA, 60 Hz

*EPA Certified Prime ratings are not available in the US or its Territories

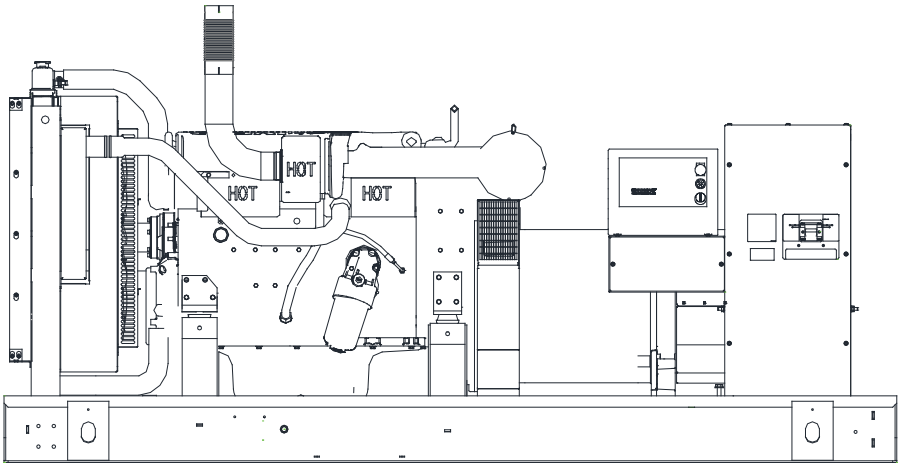

Image used for illustration purposes only

Codes and Standards

Generac products are designed to the following standards:

- UL2200, UL508, UL142, UL489
- CSA 22.2
- BS5514 and DIN 6271
- SAE J1349
- NFPA 37, 70, 99, 110
- NEC700, 701, 702, 708
- ISO 3046, 7637, 8528, 9001
- NEMA ICS10, MG1, 250, ICS6, AB1
- ANSI C62.41

Powering Ahead

For over 50 years, Generac has provided innovative design and superior manufacturing.

Generac ensures superior quality by designing and manufacturing most of its generator components, including alternators, enclosures and base tanks, control systems and communications software.

Generac gensets utilize a wide variety of options, configurations and arrangements, allowing us to meet the standby power needs of practically every application.

Generac searched globally to ensure the most reliable engines power our generators. We choose only engines that have already been proven in heavy-duty industrial applications under adverse conditions.

Generac is committed to ensuring our customers' service support continues after their generator purchase.

SD250 | 8.7L | 250 kW

INDUSTRIAL DIESEL GENERATOR SET

EPA Certified Stationary Emergency

GENERAC® INDUSTRIAL POWER

STANDARD FEATURES

ENGINE SYSTEM

- Oil Drain Extension
- Air Cleaner
- Fan Guard
- Stainless Steel Flexible Exhaust Connection
- Factory Filled Oil
- Radiator Duct Adapter (Open Set Only)
- Critical Exhaust Silencer (Enclosed Only)

Fuel System

- Fuel Lockoff Solenoid
- Primary Fuel Filter

Cooling System

- Closed Coolant Recovery System
- UV/Ozone Resistant Hoses
- Factory-Installed Radiator
- Radiator Drain Extension
- 50/50 Ethylene Glycol Antifreeze
- 120 VAC Coolant Heater

Electrical System

- Battery Charging Alternator
- Battery Cables
- Battery Tray
- Rubber-Booted Engine Electrical Connections
- Solenoid Activated Starter Motor

ALTERNATOR SYSTEM

- GENprotect™
- 12 Leads (3-Phase, Non 600V)
- Class H Insulation Material
- Vented Rotor
- 2/3 Pitch
- Skewed Stator
- Auxiliary Voltage Regulator Power Winding
- Permanent Magnet Excitation
- Sealed Bearings
- Automated Manufacturing (Winding, Insertion, Lacing, Varnishing)
- Rotor Dynamically Spin Balanced
- Amortisseur Winding
- Full Load Capacity Alternator
- Protective Thermal Switch

GENERATOR SET

- Internal Genset Vibration Isolation
- Separation of Circuits - High/Low Voltage
- Separation of Circuits - Multiple Breakers
- Wrapped Exhaust Piping
- Standard Factory Testing
- 2 Year Limited Warranty (Standby Rated Units)
- 1 Year Limited Warranty (Prime Rated Units)
- Silencer Mounted in the Discharge Hood (Enclosed Only)

ENCLOSURE (If Selected)

- Rust-Proof Fasteners with Nylon Washers to Protect Finish
- High Performance Sound-Absorbing Material (Sound Attenuation Enclosures)
- Gasketed Doors
- Stamped Air-Intake Louvers
- Upward Facing Discharge Hoods (Radiator and Exhaust)
- Stainless Steel Lift Off Door Hinges
- Stainless Steel Lockable Handles
- RhinoCoat™ - Textured Polyester Powder Coat Paint

TANKS (If Selected)

- UL 142
- Double Wall
- Vents
- Sloped Top
- Sloped Bottom
- Factory Pressure Tested (2 psi)
- Rupture Basin Alarm
- Fuel Level
- Check Valve In Supply and Return Lines
- RhinoCoat™ - Textured Polyester Powder Coat Paint
- Stainless Steel Hardware

CONTROL SYSTEM

Digital H Control Panel—Dual 4x20 Display

Program Functions

- Programmable Crank Limiter
- 7-Day Programmable Exerciser
- Special Applications Programmable Logic Controller
- RS-232/485 Communications
- 3-Phase Sensing Digital Voltage Regulator
- 2-Wire Start Capability
- Date/Time Fault History (Event Log)
- Isochronous Governor Control
- Waterproof/Sealed Connectors
- Audible Alarms and Shutdowns
- Not in Auto (Flashing Light)
- Auto/Off/Manual Switch
- E-Stop (Red Mushroom-Type)
- NFPA110 Level I and II (Programmable)
- Customizable Alarms, Warnings, and Events
- Modbus® Protocol
- Predictive Maintenance Algorithm
- Sealed Boards
- Password Parameter Adjustment Protection
- Single Point Ground
- 16 Channel Remote Trending
- 0.2 msec High Speed Remote Trending
- Alarm Information Automatically Annunciated on the Display

Full System Status Display

- Power Output (kW)
- Power Factor
- kW Hours, Total, and Last Run
- Real/Reactive/Apparent Power
- All Phase AC Voltage
- All Phase Currents
- Oil Pressure
- Coolant Temperature
- Coolant Level
- Engine Speed
- Battery Voltage
- Frequency

Alarms and Warnings

- Oil Pressure
- Coolant Temperature
- Coolant Level
- Engine Overspeed
- Battery Voltage
- Alarms and Warnings Time and Date Stamped
- Snap Shots of Key Operation Parameters During Alarms and Warnings
- Alarms and Warnings Spelled Out (No Alarm Codes)

CONFIGURABLE OPTIONS

ENGINE SYSTEM

- Oil Make-Up System
- Oil Heater
- Industrial Exhaust Silencer (Open Set)

FUEL SYSTEM

- Flexible Fuel Lines
- Primary Fuel Filter

ELECTRICAL SYSTEM

- 10A UL Battery Charger
- 2.5A UL Battery Charger
- Battery Warmer

ALTERNATOR SYSTEM

- Alternator Upsizing
- Anti-Condensation Heater
- Tropical Coating
- Permanent Magnetic Excitation

CIRCUIT BREAKER OPTIONS

- Main Line Circuit Breaker
- 2nd Main Line Circuit Breaker
- Shunt Trip and Auxiliary Contact
- Electronic Trip Breakers

GENERATOR SET

- GenLink® Communications Software (English Only)
- Extended Factory Testing
- IBC Seismic Certification
- 12 Position Load Center

ENCLOSURE

- Weather Protected Enclosure
- Level 1 Sound Attenuation
- Level 2 Sound Attenuation
- Level 2 Sound Attenuation with Motorized Damper
- Steel Enclosure
- Aluminum Enclosure
- Up to 200 MPH Wind Load Rating*
- AC/DC Enclosure Lighting Kit
- Door Alarm Switch

CONTROL SYSTEM

- NFPA 110 Compliant 21-Light Remote Annunciator
- Remote Relay Assembly (8 or 16)
- Oil Temperature Sender with Alarm
- Remote E-Stop (Break Glass-Type, Surface Mount)
- Remote E-Stop (Red Mushroom-Type, Surface Mount)
- Remote E-Stop (Red Mushroom-Type, Flush Mount)
- Remote Communication - Modem
- 10A Run Relay
- Ground Fault Indication and Protection Functions

TANKS (Size On Last Page)

- Electric Fuel Level
- Mechanical Fuel Level
- 8” Fill Extension
- 13” Fill Extension
- 19” Fill Extension

WARRANTY (Standby Gensets Only)

- 2 Year Extended Limited Warranty
- 5 Year Limited Warranty
- 5 Year Extended Limited Warranty
- 7 Year Extended Limited Warranty
- 10 Year Extended Limited Warranty

ENGINEERED OPTIONS

ENGINE SYSTEM

- Coolant Heater Ball Valves
- Fluid Containment Pan
- Block Heaters

CONTROL SYSTEM

- Spare Inputs (x4) / Outputs (x4)
- Battery Disconnect Switch

ALTERNATOR SYSTEM

- 3rd Breaker System

GENERATOR SET

- Special Testing

ENCLOSURE

- Door Switch for Intrusion Alarm
- Enclosure Ambient Heaters

TANKS

- Overfill Protection Valve
- UL2085 Tank
- ULC S-601 Tank
- Stainless Steel Tank
- Special Fuel Tanks (MIDEQ and FL DEP/DERM, etc.)
- Vent Extensions

* Consult factory for availability

SD250 | 8.7L | 250 kW

INDUSTRIAL DIESEL GENERATOR SET

EPA Certified Stationary Emergency

GENERAC® INDUSTRIAL POWER

APPLICATION AND ENGINEERING DATA

ENGINE SPECIFICATIONS

General

Make	Iveco/FPT
EPA Emissions Compliance	Stationary Emergency
EPA Emissions Reference	See Emission Data Sheet
Cylinder #	6
Type	In-Line
Displacement - cu. in (L)	530.91 (8.7)
Bore - in (mm)	4.61 (117)
Stroke - in (mm)	5.31 (135)
Compression Ratio	16.5:1
Intake Air Method	Turbocharged/Aftercooled
Cylinder Head	4-Valve
Piston Type	Aluminum
Crankshaft Type	Dropped Forged Steel

Engine Governing

Governor	Electronic Isochronous
Frequency Regulation (Steady State)	±0.25%

Lubrication System

Oil Pump Type	Gear
Oil Filter Type	Full Flow
Crankcase Capacity - qts (L)	29.57 (28)

Cooling System

Cooling System Type	Closed Recovery
Water Pump Type	Pre-Lubed, Self Sealing
Fan Type	Pusher
Fan Speed (rpm)	2,538
Fan Diameter - in (mm)	30.0 (762)

Fuel System

Fuel Type	Ultra Low Sulfur Diesel Fuel #2
Fuel Specifications	ASTM
Fuel Filtering (microns)	5
Fuel Inject Pump	Electronic
Fuel Pump Type	Engine Driven Gear
Injector Type	Common Rail
Engine Type	Direct Injection
Fuel Supply Line - in (mm)	0.5 (12.7) NPT
Fuel Return Line - in (mm)	0.5 (12.7) NPT

Engine Electrical System

System Voltage	24 VDC
Battery Charger Alternator	Standard
Battery Size	See Battery Index 0161970SBY
Battery Voltage	(2) -12 VDC
Ground Polarity	Negative

ALTERNATOR SPECIFICATIONS

Standard Model	Generac 520 mm
Poles	4
Field Type	Revolving
Insulation Class - Rotor	H
Insulation Class - Stator	H
Total Harmonic Distortion	<5% (3-Phase)
Telephone Interference Factor (TIF)	< 50

Standard Excitation	Permanent Magnet Excitation
Bearings	Single Sealed Cartridge
Coupling	Direct Via Flexible Disc
Prototype Short Circuit Test	Yes
Voltage Regulator Type	Digital
Number of Sensed Phases	All
Regulation Accuracy (Steady State)	±0.25%

SD250 | 8.7L | 250 kW

INDUSTRIAL DIESEL GENERATOR SET

EPA Certified Stationary Emergency

GENERAC® INDUSTRIAL POWER

OPERATING DATA

POWER RATINGS

		Standby
Single-Phase 120/240 VAC @1.0pf	250 kW	Amps: 1,042
Three-Phase 120/208 VAC @0.8pf	250 kW	Amps: 867
Three-Phase 120/240 VAC @0.8pf	250 kW	Amps: 752
Three-Phase 277/480 VAC @0.8pf	250 kW	Amps: 376
Three-Phase 346/600 VAC @0.8pf	250 kW	Amps: 301

STARTING CAPABILITIES (sKVA)

sKVA vs. Voltage Dip

277/480 VAC								208/240 VAC							
Alternator	kW	10%	15%	20%	25%	30%	35%	Alternator	kW	10%	15%	20%	25%	30%	35%
Standard	250	263	395	527	658	790	922	Standard	250	197	296	395	494	593	692
Upsize 1	300	303	454	605	757	908	1,059	Upsize 1	300	277	341	454	568	681	794
Upsize 2	350	383	575	767	958	1,150	1,342	Upsize 2	350	280	410	535	640	770	900

FUEL CONSUMPTION RATES*

Fuel Pump Lift- ft (m)
3 (1)

Total Fuel Pump Flow (Combustion + Return) - gal/hr (l/hr)
26 (98)

Diesel - gal/hr (l/hr)

Percent Load	Standby
25%	5.5 (20.8)
50%	10.4 (39.4)
75%	14.8 (56.0)
100%	18.5 (70.0)

* Fuel supply installation must accommodate fuel consumption rates at 100% load.

COOLING

		Standby
Coolant Flow per Minute	gal/min (l/min)	63.3 (240)
Coolant System Capacity	gal (l)	12.7 (49.2)
Heat Rejection to Coolant	BTU/hr	682,058
Inlet Air	cfm (m^3/hr)	8,872 (251)
Maximum Operating Ambient Temperature	°F (°C)	122 (50)
Maximum Operating Ambient Temperature (Before Derate)	See Bulletin No. 0199280SSD	
Maximum Radiator Backpressure	in H_2O	0.5

COMBUSTION AIR REQUIREMENTS

	Standby
Flow at Rated Power cfm (m^3/min)	720 (20.39)

ENGINE

		Standby
Rated Engine Speed	rpm	1,800
Horsepower at Rated kW**	hp	389
Piston Speed	ft/min (m/min)	1,593 (486)
BMEP	psi	332

EXHAUST

		Standby
Exhaust Flow (Rated Output)	cfm (m^3/min)	1,550 (43.9)
Max. Allowable Backpressure	inHg (Kpa)	1.5 (5.1)
Exhaust Temp (Rated Output)	°F (°C)	1,000 (538)

** Refer to "Emissions Data Sheet" for maximum bHP for EPA and SCAQMD permitting purposes.

Deration – Operational characteristics consider maximum ambient conditions. Derate factors may apply under atypical site conditions.
Please consult a Generac Power Systems Industrial Dealer for additional details. All performance ratings in accordance with ISO3046, BS5514, ISO8528 and DIN6271 standards.
Standby - See Bulletin 0187500SSB
Prime - See Bulletin 0187510SSB

SD250 | 8.7L | 250 kW

INDUSTRIAL DIESEL GENERATOR SET

EPA Certified Stationary Emergency

GENERAC® INDUSTRIAL POWER

DIMENSIONS AND WEIGHTS*

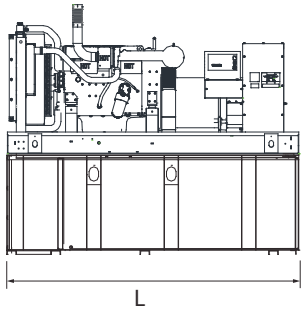

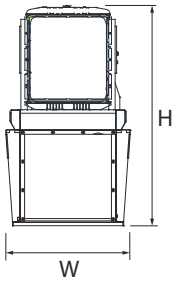

OPEN SET (Includes Exhaust Flex)

Run Time Hours	Usable Capacity Gal (L)	L x W x H in (mm)	Weight lbs (kg)
No Tank	-	128 (3,250) x 53 (1,357) x 57 (1,460)	4,465 (2,025)
9	153 (579)	128 (3,250) x 53 (1,357) x 70 (1,790)	5,470 (2,481)
21	372 (1,407)	128 (3,250) x 53 (1,357) x 82 (2,095)	5,892 (2,673)
34	589 (2,227)	128 (3,250) x 53 (1,357) x 90 (2,400)	6,309 (2,862)
40	693 (2,623.3)	136 (3,454) x 53 (1,357) x 94 (2,400)	6,060 (2,749)
55	946 (3,581)	136 (3,455) x 53 (1,357) x 110 (2,806)	7,490 (3,397)
77	1,325 (5,015.7)	278 (7,055) x 53 (1,357) x 110 (2,806)	8,505 (3,858)

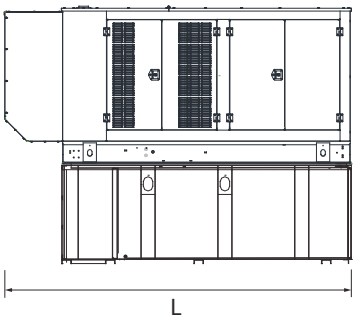

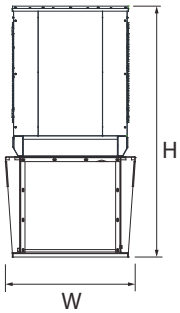

STANDARD ENCLOSURE

Run Time Hours	Usable Capacity Gal (L)	L x W x H in (mm)	Weight lbs (kg) Enclosure Only Steel	Weight lbs (kg) Enclosure Only Aluminum
No Tank	-	154 (3,923) x 54 (1,371) x 69 (1,772.1)	941 (427)	474 (215)
9	153 (579.2)	154 (3,923) x 54 (1,371) x 83 (2,102.1)		
21	372 (1,407)	154 (3,923) x 54 (1,371) x 95 (2,407.1)		
34	589 (2,227)	154 (3,923) x 54 (1,371) x 107 (2,712.1)		
40	693 (2,623.3)	154 (3,923) x 54 (1,371) x 107 (2,712.1)		
55	946 (3,581)	154 (3,923) x 54 (1,371) x 123 (3,118.1)		
77	1,325 (5,015.7)	278 (7,055) x 54 (1,371) x 123 (3,118.1)		

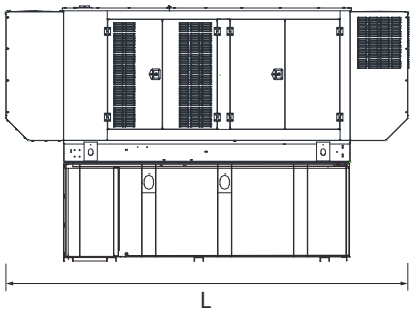

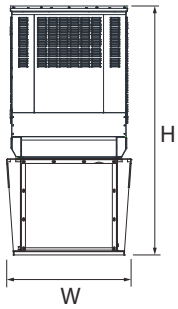

LEVEL 1 ACOUSTIC ENCLOSURE

Run Time Hours	Usable Capacity Gal (L)	L x W x H in (mm)	Weight lbs (kg) Enclosure Only Steel	Weight lbs (kg) Enclosure Only Aluminum
No Tank	-	180 (4,569) x 54 (1,371) x 70 (1,772.1)	1,246 (565)	606 (275)
9	153 (579.2)	180 (4,569) x 54 (1,371) x 83 (2,102.1)		
21	372 (1,407)	180 (4,569) x 54 (1,371) x 95 (2,407.1)		
34	589 (2,227)	180 (4,569) x 54 (1,371) x 107 (2,712.1)		
40	693 (2,623.3)	180 (4,569) x 54 (1,371) x 107 (2,712.1)		
55	946 (3,581)	180 (4,569) x 54 (1,371) x 123 (3,118.1)		
77	1,325 (5,015.7)	278 (7,055) x 54 (1,371) x 123 (3,118.1)		

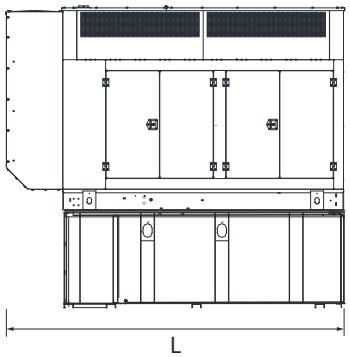

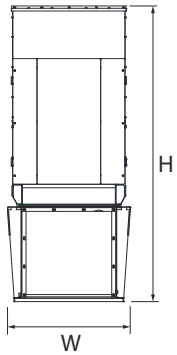

LEVEL 2 ACOUSTIC ENCLOSURE

Run Time Hours	Usable Capacity Gal (L)	L x W x H in (mm)	Weight lbs (kg) Enclosure Only Steel	Weight lbs (kg) Enclosure Only Aluminum
No Tank	-	155 (3,923) x 54 (1,371) x 93 (2,370.4)	1,482 (672)	708 (321)
9	153 (579.2)	155 (3,923) x 54 (1,371) x 106 (2,700.4)		
21	372 (1,407)	155 (3,923) x 54 (1,371) x 118 (3,005.4)		
34	589 (2,227)	155 (3,923) x 54 (1,371) x 130 (3,310.4)		
40	693 (2,623.3)	155 (3,923) x 54 (1,371) x 130 (3,310.4)		
55	946 (3,581)	155 (3,923) x 54 (1,371) x 146 (3,716.4)		
77	1,325 (5,015.7)	278 (7,055) x 54 (1,371) x 146 (3,716.4)		

* All measurements are approximate and for estimation purposes only.

Specification characteristics may change without notice. Dimensions and weights are for preliminary purposes only. Please consult a Generac Power Systems Industrial Dealer for detailed installation drawings.

Generac Power Systems, Inc. | P.O. Box 8 | Waukesha, WI 53189
P: (262) 544-4811 ©2017 Generac Power Systems, Inc. All rights reserved. All specifications are subject to change without notice.

Part No 0K5099
Rev. C 09/05/17

ENGINE RUN RELAY

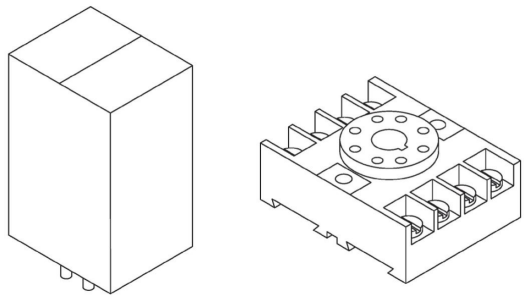

- For use with Generac's Digital Control Platforms
- 10 Amp Contact Rating
- 12 or 24 Volt DC Input
- Contact Open or Closure on Engine Run

Contacts	
Type	DPDT
Material	Silver
Rating	UL 10A @ 240VAC 10A @ 30VDC
Coils	
Input Voltage	24VDC
Resistance	400 Ohms
Nominal Power	1.5W

Wiring Diagram with E panel, H-100 Panel

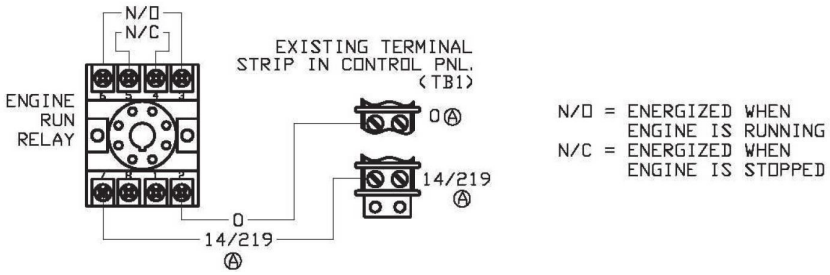

Wiring Diagram with PMDCP

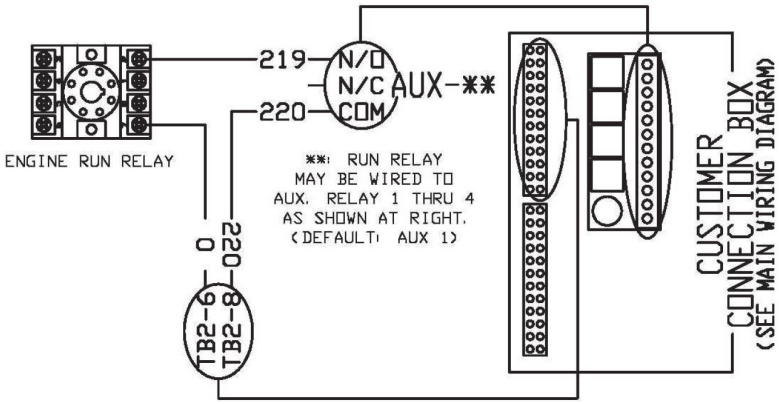

Wiring Diagram with Power Zone Pro Sync

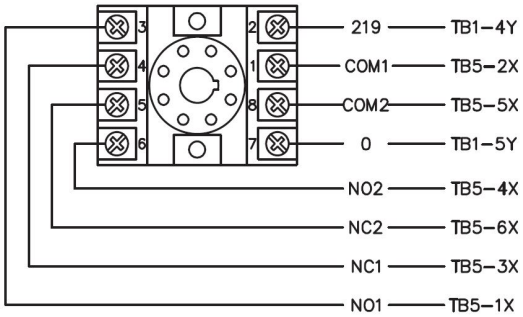

TB5

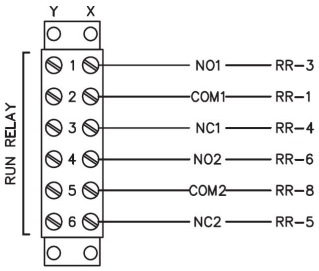

Pin Detail

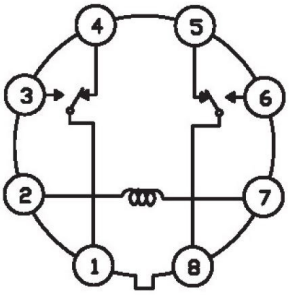

Generac Power Systems, Inc. | P.O. Box 8 | Waukesha, WI 53187
P: (262) 544-4811 © 2019 Generac Power Systems, Inc. All rights reserved. All specifications are subject to change without notice.

Part No.0161920SBY
Rev. E 06/12/19

H-100 CONTROL PANEL

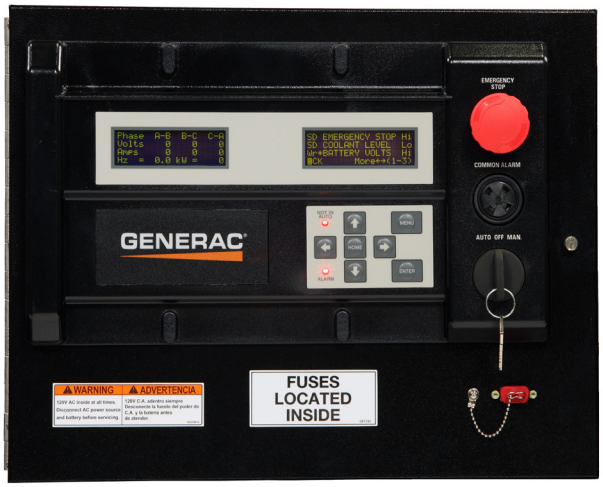

The Quiet-Test™ H-100 Control Panel is a digital microprocessor electronic controller that integrates all engine and transfer switch functions into a single control system.

- Digital Controls for All Saftey Shutdowns
- Isochronous Governor Control
- Digital 3 Phase Sensing Voltage Regulator
- Sealed Digital Circuit Board
- Mates with HTS Transfer Switch and Any 2-wire Start ATS
- Alarm and Event Logging
- Built-in Diagnostics
- Internal PLC

Features

- Two 4-line x 20 Displays
- Full System Status
- 3 Phase Sensing Digital Voltage Regulator
- Remote Ports
  - RS232
  - RS485
  - CANbus
- Waterproof Connections
- Built -in PLC
- Full Range Standby Operation
- Full System Status
  - 3 Phase AC Volts
  - 3 Phase Amps
  - kW
  - Power Factor
  - Reactive Power
  - Oil Pressure
  - Water Temperature
  - Water Level
  - Oil Temperature (Optional)
  - Fuel Pressure
  - Engine Speed
  - Battery Voltage
  - Alternator Frequency
  - Time
  - Date
  - Transfer Switch Status
  - Run Hours
  - Service Reminders
  - Trending
  - Fault History (Alarm Log)
  - I^2T Function for Full Generator Protection
- Shutdowns
  - Overvoltage
  - Overspeed
  - Low Oil Pressure
  - High Coolant Temperature
  - Low Coolant Level
- Remote Communications
- Configurable to NFPA 110, Level 1 or 2
- Programmable Auto Crank
- Emergency Stop
- On/Off/Manual Switch
- Not in Auto Flashing Light
- Audible Alarm for Fault Condition
- Transfer Switch Logic Communicates with HTS Transfer Switch
- Selectable Low Speed Exercise
- Temperature Range: -40° to +70°C

The generator set parameters can be manipulated and monitored without standing in front of the control panel with GenLink® software. The Generac H-100 control panel also monitors and controls transfer switch functions when used with the HTS transfer switch.

- Monitors Utility Voltage
- Monitors Generator Voltage
- Timer for Line Interrupt Delay
- Timer for Engine Warmup
- Timer for Minimum Engine Run Time
- Timer for Return to Utility Position
- Timer for Engine Cooldown
- Built-in Exerciser Timer (7 Day)
- Additional 2-wire Start Controls for Any 2-wire Transfer Switch

Part No. 0172110SBY
Rev. D 10/18/19

H-100 CONTROL PANEL

Typical Control Connection

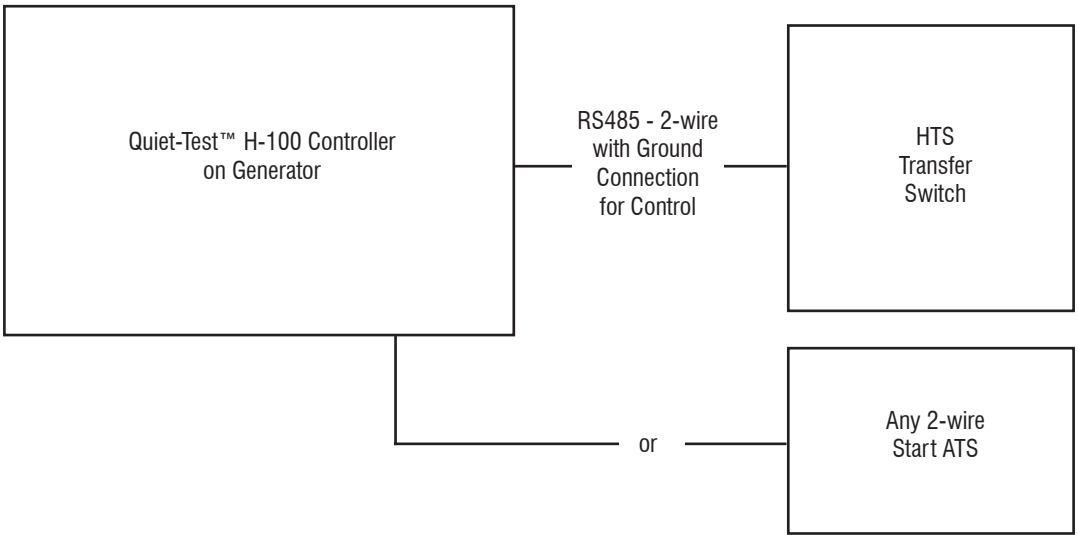

 © 2019 Generac Power Systems, Inc. All rights reserved. All specifications are subject to change without notice.

Part No. 0172110SBY
Rev. D 10/18/19

21 LIGHT REMOTE ANNUNCIATOR AND REMOTE RELAY PANEL

Model 0054650 Gray Remote Annunciator Panel without Relays
Model 0054660 Gray Remote Relay Panel without LEDs and Keypad (Relays Only)
Model 0054640 Gray Remote Annunciator Panel with 8 Relays
Model 0056370 Tan Flush Mount Enclosure without Annunciator
Model 0066950 Gray Flush Mount Enclosure without Annunciator

Description:

The Remote Annunciator Panel provides remote monitoring and annunciation of up to 18 generator parameters using LEDs located on the annunciator keypad. It also provides two system level warnings which are System Ready and Communications OK.

The Relay Panel has up to 8 selectable functions on form A relays; multiple relay panels can be connected for all 18 generator parameters.

The specific faults can be selected using either the DIP switches located on the annunciator circuit board or through a computer via the RS232 connection on the circuit board. All relays are energized on power up and open during a fault condition.

Communication is via a RS485 serial data link and power is supplied by the generator battery (+12 VDC or +24 VDC).

The Remote Annunciator Panel complies with NFPA 99 and NFPA 110.

Environmental Specifications:

Operating Temperature	-25 ºC to 60 ºC
Humidity	0 to 95% Non-Condensing
Power Supply	Generator Battery, +12 or +24 Volts DC
Power Usage	6 WattsTypical
Communication Line	RS485 Fully Isolated Twisted Pair Cable with Shield
Maximum Cable Length	4,000 ft
Relay Output	One NO Contact (Energized when Annunciator is Powered and No Faults are Present)
Relay Contact Rating	30 VDC, 1 A
Enclosure Rating	NEMA 1
Alarm Horn (Remote Annunciator Panels Only)	90 dB @ 10 cm

21 LIGHT REMOTE ANNUNCIATOR AND REMOTE RELAY PANEL

Function	Color	Alarm	Latched
Pre-Low Oil Pressure	Yellow	Yes	Yes
Pre-High Water Temperature	Yellow	Yes	Yes
Pre-Low Water Temperature	Yellow	Yes	Yes
Pre-Low Fuel	Yellow	Yes	Yes
Battery Charge AC Fail	Yellow	Yes	No
Low Battery Voltage	Yellow	Yes	No
High Battery Voltage	Yellow	No	No
Not in Auto	Red	Yes	No
RPM Sensor Loss	Red	Yes	Yes
Overcrank	Red	Yes	Yes
Overspeed	Red	Yes	Yes
Low Oil Pressure	Red	Yes	Yes
High Water Temperature	Red	Yes	Yes
Low Water Level	Red	Yes	Yes
Emergency Stop	Red	Yes	No
Gen Running	Yellow	No	No
Gen Power (ATS)	Yellow	No	No
Line Power (ATS)	Green	No	No
Systems Ready	Green	Yes	No
Communications OK	Green	Yes	No
Spare	Green	No	No

Spare Keypad Switch can be used to implement a remote start function (Model 0054640 only).

Surface Mount Annunciator

The 21 Light Annunciator can mount to a flat surface with connections through the 0.812 inch diameter knockout on the back surface or through 0.812 inch diameter knockouts on sides as shown.

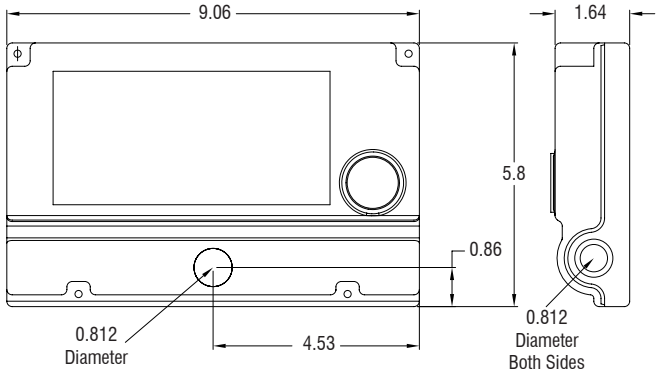

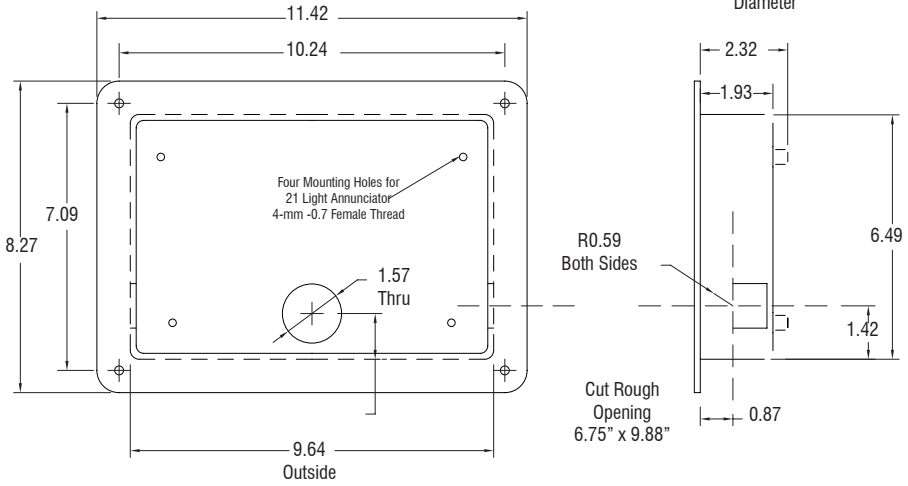

Flush Mount Annunciator

This Flush Mount Box is recessed into the wall opening and the surface mount annunciator mounts to the (4) 4 mm screw holes on the back surface. After wire connections are made the front annunciator cover is attached.

Dimensions are in inches.

Generac Power Systems, Inc. | P.O. Box 8 | Waukesha, WI 53187
P: (262) 544-4811 © 2019 Generac Power Systems, Inc. All rights reserved. All specifications are subject to change without notice.

Part No. 0604160SSD
Rev. E 06/13/19

ALTERNATOR DATA SHEET
K0250124Y21

General Characteristics

Voltages (V)	208/240 and 480	Number of Leads	12
Frequency (Hz)	60	Winding Type	Reconnectable
Phases	3	Air Flow (cfm)	1500
Speed (rpm)	1800	Total Harmonic Distortion (%)	<5
Excitation System	PMG	Largest Single Harmonic Value (%)	<3.5
Insulation Class	H	Telephone Interference Factor (TIF)	<50
Winding Pitch	2/3	Reference Part Number	0L3718E01R

Ratings at 0.8 pf based on 40˚C Ambient

Voltage (V)	80˚C Rise		105˚C Rise		120˚C Rise		150˚C Rise	
	kW	kVA	kW	kVA	kW	kVA	kW	kVA
208/240	191	239	229	286	250	312	270	337
480	191	239	229	286	250	312	270	337

Base Data at 480V, 312 kVA, 1800 RPM, 60 Hz, 3 Phase

Description	Value
Stator Resistance, Line to Line, High Wye Connection (Ω)	0.0095
Rotor Resistance (Ω)	1.250
Exciter Stator Resistance - PMG (Ω)	7.590
Exciter Rotor Resistance - PMG (Ω)	0.3300
Excitation Winding Resistance - PMG (Ω)	1.1288
Xd, Direct Axis Synchronous Reactance (p.u.)	3.30
X2, Negative Sequence Reactance (p.u.)	0.22
X0, Zero Sequence Reactance (p.u.)	0.08
X'd, Direct Axis Transient Reactance (p.u.)	0.17
X"d, Direct Axis Subtransient Reactance (p.u.)	0.15
Xq, Quadrature Axis Synchronous Reactance (p.u.)	1.58
T'd, Direct Axis Transient Short Circuit Time Constant (s)	0.107

Description	Value
T"d, Direct Axis Subtransient Short Circuit Time Constant (s)	0.016
T'do, Direct Axis Transient Open Circuit Time Constant (s)	2.510
Ta, Short Circuit Time Constant of Armature Winding (s)	0.034
Phase Sequence CCW-NDE	T1, T2, T3
Voltage Balance, L-L or L-N (%)	2.5
Deviation Factor (%)	< 7
High Wye Connection, Sustained 3 Phase Short Circuit Current (%) - PMG only	300
X/R	13
Short Circuit Ratio	0.52
Heat Rejection (BTU/hr) - 100% Rated Load, 480V, 0.8pf, 120°C Temp. Rise	96,893

Reference: Mil-STD-705B
All Ratings are Nominal

Generac Power Systems, Inc. | P.O. Box 8 | Waukesha, WI 53187
P: (262) 544-4811 © 2018 Generac Power Systems, Inc. All rights reserved. All specifications are subject to change without notice.

Bulletin No. 0183450SSD
Rev. E 09/05/18

ALTERNATOR DATA SHEET
K0250124Y21

sKVA

	10%	15%	20%	25%	30%	35%
480 V @ 0.3PF	160	240	343	453	597	741
480 V @ 0.6PF	187	280	394	512	630	748
208/240 V @ 0.3PF	122	182	257	341	449	557
208/240 V @ 0.6PF	140	210	296	390	506	612

Efficiencies

	480 V @ 0.8 PF	480 V @ 1.0 PF	208/240 V @ 0.8PF	208/240 V @ 1.0 PF
20% Rated Power*	80.9	81.9	83.6	84.4
40% Rated Power*	86.8	88.3	88.2	89.5
60% Rated Power*	89.3	91.4	89.8	91.7
80% Rated Power*	89.9	92.5	89.9	92.2
100% Rated Power*	89.8	92.9	89.4	92.1

*Rated Power value is rating kW at 120°C Winding Temp Rise and 0.8pf

LOG LOG Decrement Curve

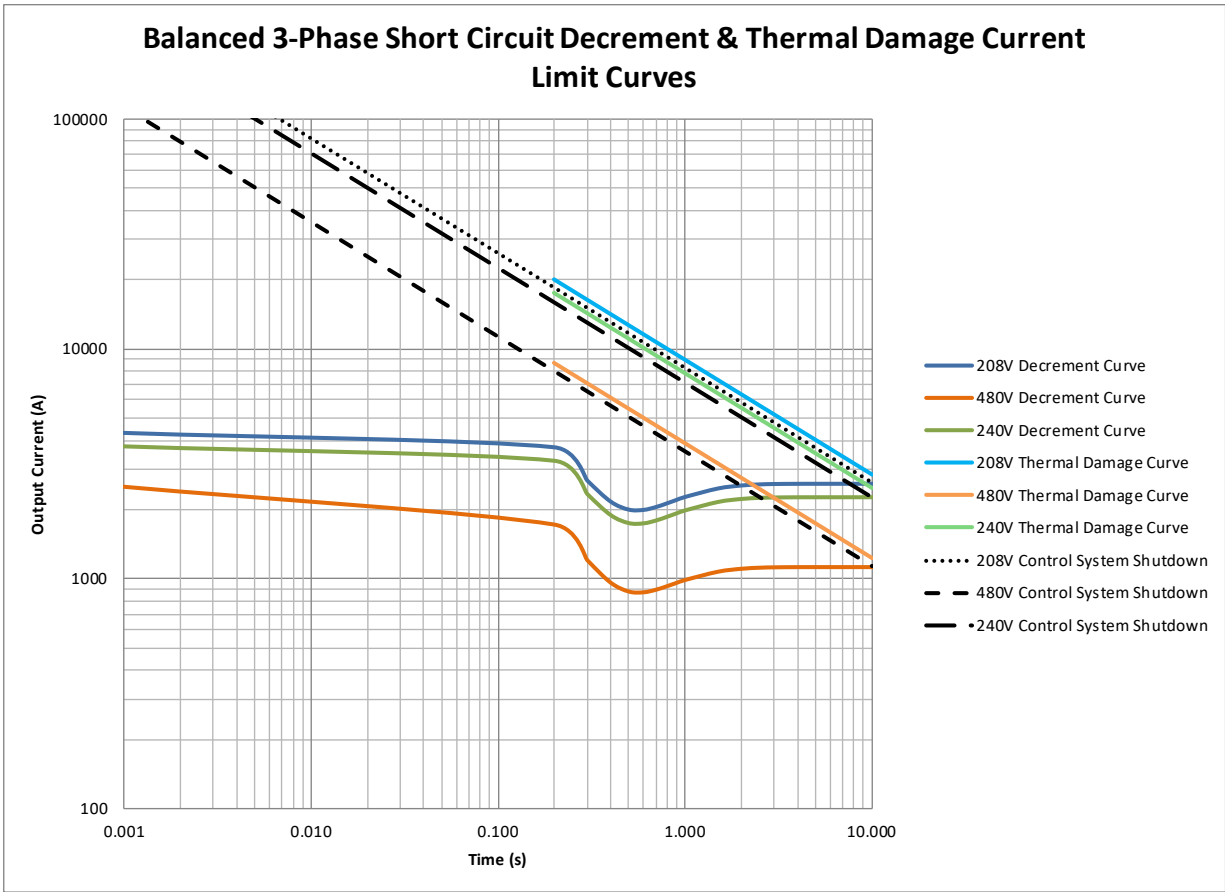

Generac Power Systems, Inc. | P.O. Box 8 | Waukesha, WI 53187
P: (262) 544-4811 © 2018 Generac Power Systems, Inc. All rights reserved. All specifications are subject to change without notice.

Bulletin No. 0183450SSD
Rev. E 09/05/18

GENprotect ™
Seamless Protection for Industrial Power Generators

GENprotect Operation

The design choice of an onsite power system using a Generac Industrial Power Generator assures your emergency power source is protected from unexpected power distribution faults. Typically, a generator will include some type of over-current device, such as a circuit breaker, or be protected by inherent design with the controller protecting the alternator through a protection algorithm. Generac's GENprotect generator protection system monitors the system current output and protects the alternator with extended security against fault scenarios that could occur within the site's downstream distribution system.

It is a common misconception that the alternator's main circuit breaker protects the alternator from a short circuit event. The main output breaker protects the cabling and provides a convenient disconnect. The characteristic trip curve for the industry standard thermal magnetic breaker (MCCB, molded case thermal magnetic or solid state) does not coordinate with the thermal damage limitation for an on-site generator. If circuit breakers are used for generator protection, a solid-state circuit breaker with full adjustments (Long Time, Short Time and Instantaneous, LSI) is required to coordinate the breaker protection curve within the generator thermal damage curve. Historically, this limitation was often accepted in system design since failures of the main generator feeder are extremely rare. Most short circuit events happen at a branch circuit, equipment level, where the fault is easily cleared by the smaller down stream breakers.

Given the mission critical nature of today's back-up power applications, it is more desirable to protect the system against even relatively rare failure modes. As generator controllers have become more powerful it is feasible for manufactures to supply coordinated short circuit protection integral to the generator control system, negating the need for a main-line circuit breaker.

Generac's GENprotect alternator protection algorithm monitors the generator output. If this monitoring senses short circuit current in excess of rated amps, GENprotect steps in to provide a controlled and safe approach to breaker coordination and alternator protection. GENprotect first limits the alternator short circuit current level to 300%. By limiting the available fault current, GENprotect extends the time the alternator can maintain fault current resulting in consistent breaker coordination. Without this functionality a line to neutral fault may be at 800% of rated current and need to be cleared within 1.4 seconds. The second function GENprotect performs is I2T thermal protection for the alternator. Since a short circuit event can heat the alternator so rapidly, it is not possible to protect the alternator by monitoring temperature. Instead GENprotect calculates the heat energy of the fault current. When this energy reaches the limits of NEMA MG1, GENprotect trips the generator off-line. This configuration ensures the alternator is protected and the power system is ensured 10 seconds of 300% fault current for breaker coordination.

DESCRIPTION

- GENprotect is an alternator protection algorithm approved by UL.
- Protects alternator from damage due to shorts and electrical faults.
- Provides breaker coordination and alternator protection.
- Allows for use of multiple circuit breaker choices, including "no" breaker.

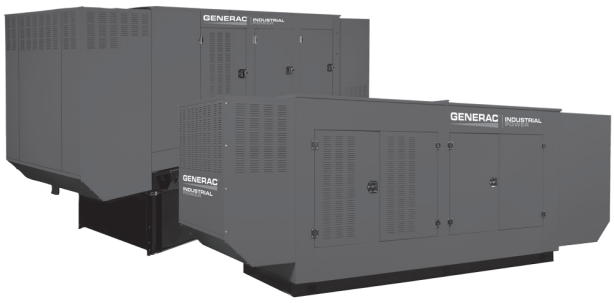

GENprotect ™
Seamless Protection for Industrial Power Generators

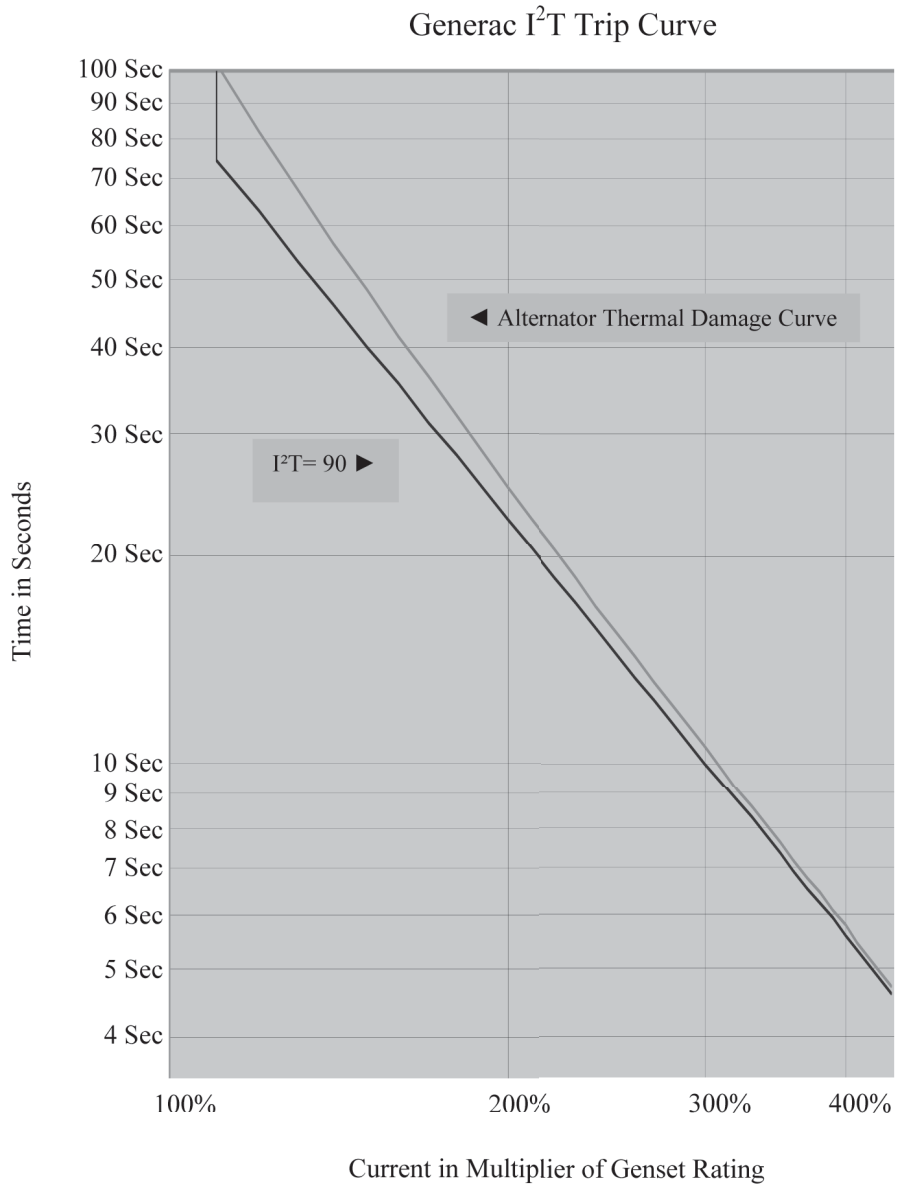

The above Figure shows the Generac GENprotect thermal protection curve for use in protection and coordination studies. The alternator Thermal Damage Curve is shown just to the right of the GENprotect protection curve. If the alternator load is greater than the thermal damage protection curve for the alternator, the generator set will trip off-line. For example, an overload current of 110% for 75 seconds causes an overload alarm and will trip the generator off-line, shutting down the engine. GENprotect will provide generator protection over a full range of time and current, from instantaneous faults to overloads lasting several minutes. An advantage of GENprotect over a MCCB is that GENprotect allows for downstream breakers to clear faults without tripping the generator off-line, providing selective coordination with the first level of downstream breakers.

 © 2019 Generac Power Systems, Inc. All rights reserved. All specifications are subject to change without notice.

INDUSTRIAL GENSET - BATTERY INDEX

• Warranty by Exide Corp. • Exide e-mail: tbgna@exide.com • 800-782-7848 National Hot line

INDUSTRIAL SPARK-IGNITED GENSETS - AVAILABLE BATTERIES

Engine	System Voltage	Battery Quantity	GENERAC PART # 058208 (Group 24F)	077483 (Group 26)	058665 (Group 27F)	061119 (Group 31)	061104 (Group 8D)	BT0015A02 (Group 8D)
G2.4	12	1		X				
G4.5	12	1			X	X		
G9.0	12	1			X	X		
G14.2	24	2					X	
G21.9	24	2					X	
G25.8	24	2					X	
G33.9	24	4					X	
G49.0	24	4					X	X

INDUSTRIAL DIESEL GENSETS - AVAILABLE BATTERIES

Engine	System Voltage	Battery Quantity	GENERAC PART # 058665 (Group 27F)	061119 (Group 31)	061104/BT0015A00 (Group 8D)	BT0015A02 (Group 8D)
D2.2 Perkins	12	1	X	X		
D2.4 Generac	12	1	X	X		
D3.4 Generac	12	1	X	X		
D4.5 FPT	12	1		X		
D6.7 FPT 100, 130kW	12	1 or 2†		X		
D6.7 FPT 150, 175kW	12	2†		X		
D8.7 FPT	24	2		X		
D10.3 FPT	24	2		X	X	
D12.9 FPT	24	2		X	X	
D12.5 Perkins	24	2			X	
D15.2 Perkins	24	2			X	
D16.0 Volvo	24	2		X	X	
D18.1 Perkins	24	2			X	
D33.9 MHI	24	2			X	X
D37.1 MHI	24	4			X	X
D49.0 MHI	24	4			X	X
D65.4 MHI	24	4			X	X

Part Number	Group Number*	Nominal CCA @ 0° F	DIMENSIONS (in) NOMINAL L	W	H
058208	24F	525	6.75	10.63	9.00
077483	26	525	6.75	8.25	7.75
058665	27F	700	6.75	12.50	9.00
061119	31	925	6.75	13.00	9.40
061104/ BT0015A00	8D	1,155	11.00	20.80	10.00
BT0015A02	8D	1,300	11.00	20.80	10.00

All batteries are 12V, 6 cell construction, lead calcium type.
For 24V systems, batteries are wired in series.

X Battery available with electrolyte and installed in genset.
† Single or dual-paralleled battery options are available on 100 and 130kW. Single-battery option not available on 150 and 175kW.
* BCI Group Size reference.

Generac Power Systems, Inc. | P.O. Box 8 | Waukesha, WI 53187
P: (262) 544-4811 © 2020 Generac Power Systems, Inc. All rights reserved. All specifications are subject to change without notice.

Part No. 0161970SBY
Rev. L 8/24/20

RhinoCoat™

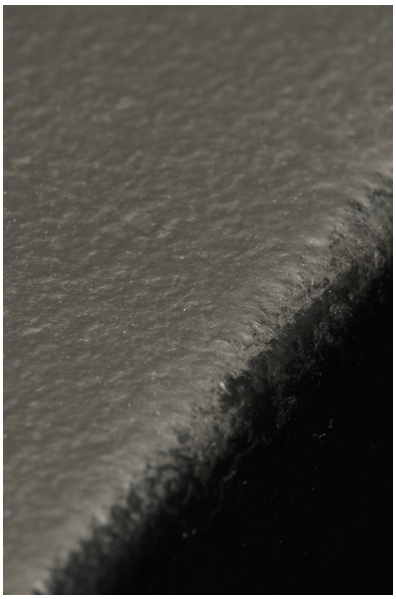

Generac's RhinoCoat™ finish system provides superior durability as a standard for all Generac Industrial enclosures, tanks and frames.*

Testing Standards

Generac's RhinoCoat™ finished surfaces are subjected to numerous tests. These include:

- ASTM D - 1186 - 87.....2.5+ MIL Paint Thickness
- ASTM D - 3363 - 92a.....Adequate Material Hardness
- ASTM D 522 - B.....Resistant to Cracking
- ASTM D 3359 - B.....Exceptional Adhesion
- ASTM B117 D 1654.....Resistant to Salt Water Corrosion
- ASTM D1735 D 1654.....Resistant to Humidity
- ASTM 2794 93 (2004).....Exceptional Impact Resistance
- SAEJ1690 - UV Specifications.....UV Protection

In addition to the testing standards above, Generac adds the following test requirements more specific to generator applications:

- Resistant to Typical Oils
- Resistant to Typical Fuels
- Resistant to Typical Antifreeze
- Resistant to Distilled Water

Primary Codes and Standards

*RhinoCoat™ powder coat paint is durable and corrosion resistant however it is not a rust preventative. Generac pretreats all powder coated parts to assist with resistance to corrosion.

 © 2019 Generac Power Systems, Inc. All rights reserved. All specifications are subject to change without notice.

EATON CIRCUIT BREAKER DATA
Standard (80% Rated) Thermal-Magnetic

AMPS	VOLTS	ACCESSORIES	EATON PART NUMBER	SERIES	FRAME	GENERAC PART NUMBER
15	600	No Accessories	FG3015	C	F-Frame	0H9294TA00
		Shunt Trip and Aux. Contacts	FG3015A12S03			0H9294TAB0
20		No Accessories	FG3020			0H9295TA00
		Shunt Trip and Aux. Contacts	FG3020A12S03			0H9295TAB0
25		No Accessories	FG3025			0J0248TA00
		Shunt Trip and Aux. Contacts	FG3025A12S03			0J0248TAB0
30		No Accessories	FG3030			0H9296TA00
		Shunt Trip and Aux. Contacts	FG3030A12S03			0H9296TAB0
35		No Accessories	FG3035			0H9297TA00
		Shunt Trip and Aux. Contacts	FG3035A12S03			0H9297TAB0
40		No Accessories	FG3040			0H9298TA00
		Shunt Trip and Aux. Contacts	FG3040A12S03			0H9298TAB0
45		No Accessories	FG3045			0H9299TA00
		Shunt Trip and Aux. Contacts	FG3045A12S03			0H9299TAB0
50		No Accessories	FG3050			0H9300TA00
		Shunt Trip and Aux. Contacts	FG3050A12S03			0H9300TAB0
60		No Accessories	FG3060			0H9301TA00
		Shunt Trip and Aux. Contacts	FG3060A12S03			0H9301TAB0
70		No Accessories	FG3070			0H9302TA00
		Shunt Trip and Aux. Contacts	FG3070A12S03			0H9302TAB0
80		No Accessories	FG3080			0J0841TA00
		Shunt Trip and Aux. Contacts	FG3080A12S03			0J0841TAB0
90		No Accessories	FG3090			0J0837TA00
		Shunt Trip and Aux. Contacts	FG3090A12S03			0J0837TAB0
100		No Accessories	FG30100			0H9314TA00
		Shunt Trip and Aux. Contacts	FG3100A12S03			0H9314TAB0
125		No Accessories	FG30125			0J0231TA00
		Shunt Trip and Aux. Contacts	FG3125A12S03			0J0231TAB0
150		No Accessories	FG30150			0H9315TA00
		Shunt Trip and Aux. Contacts	FG3150A12S03			0H9315TAB0
175		No Accessories	FG30175			0H9316TA00
		Shunt Trip and Aux. Contacts	FG3175A12S03			0H9316TAB0
200		No Accessories	FG30200			0J0232TA00
		Shunt Trip and Aux. Contacts	FG3200A12S03			0J0232TAB0
225		No Accessories	FG3225			0H9317TA00
		Shunt Trip and Aux. Contacts	FG3225A12S03			0H9317TAB0
250		No Accessories	JG3250		J-Frame	0H9318TA00
		Shunt Trip and Aux. Contacts	JG3250A12S43			0H9318TAB0
300		No Accessories	KG3300		K-Frame	0H9319TA00
		Shunt Trip and Aux. Contacts	KG3300A12S43			0H9319TAB0

EATON CIRCUIT BREAKER DATA
Standard (80% Rated) Thermal-Magnetic

AMPS	VOLTS	ACCESSORIES	EATON PART NUMBER	SERIES	FRAME	GENERAC PART NUMBER
350	600	No Accessories	KG3350	C	K-Frame	0H9320TA00
		Shunt Trip and Aux. Contacts	KG3350A12S43			0H9320TAB0
400		No Accessories	KG3400			0H9321TA00
		Shunt Trip and Aux. Contacts	KG3400A12S43			0H9321TAB0
450		No Accessories	LG3450		L-Frame	0H9322TA00
		Shunt Trip and Aux. Contacts	LG3450A12S03			0H9322TAB0
500		No Accessories	LG3500			0H9323TA00
		Shunt Trip and Aux. Contacts	LG3500A12S03			0H9323TAB0
600		No Accessories	LG3600			0H9324TA00
		Shunt Trip and Aux. Contacts	LG3600A12S03			0H9324TAB0
700		No Accessories	MDL3700		M-Frame	0H9325TA00
		Shunt Trip and Aux. Contacts	MDL3700A06S02			0H9325TAB0
800		No Accessories	MDL3800			0H9326TA00
		Shunt Trip and Aux. Contacts	MDL3800A06S02			0H9326TAB0
900*		No Accessories	NG3900		N-Frame	0H9327TA00
		Shunt Trip and Aux. Contacts	NG3900A12S03			0H9327TAB0
1,000*		No Accessories	NG31000			0H9328TA00
		Shunt Trip and Aux. Contacts	NG31000A12S03			0H9328TAB0
1,200*		No Accessories	NG31200			0H9329TA00
		Shunt Trip and Aux. Contacts	NG31200A12S03			0H9329TAB0
1,400*		No Accessories	RGH316033MY22	G	RG-Frame	0H9360EAN0
		Shunt Trip and Aux. Contacts	RGH316033MA12S21Y22			0H9360EANB
1,600*		No Accessories	RGH316033MY22			0H9361EAN0
		Shunt Trip and Aux. Contacts	RGH316033MA12S21Y22			0H9361EANB
2,000*		No Accessories	RGH320033M			0H9367EAN0
		Shunt Trip and Aux. Contacts	RGH320033MA12S21			0H9367EANB
2,500*		No Accessories	RGH325033M			0H9368EAN0
		Shunt Trip and Aux. Contacts	RGH325033MA12S21			0H9368EANB

*LS-type electronic trip breaker equipped with RMS 310+ trip unit.

 © 2020 Generac Power Systems, Inc. All rights reserved. All specifications are subject to change without notice.

BATTERY CHARGER
2.5 amp and 10 amp

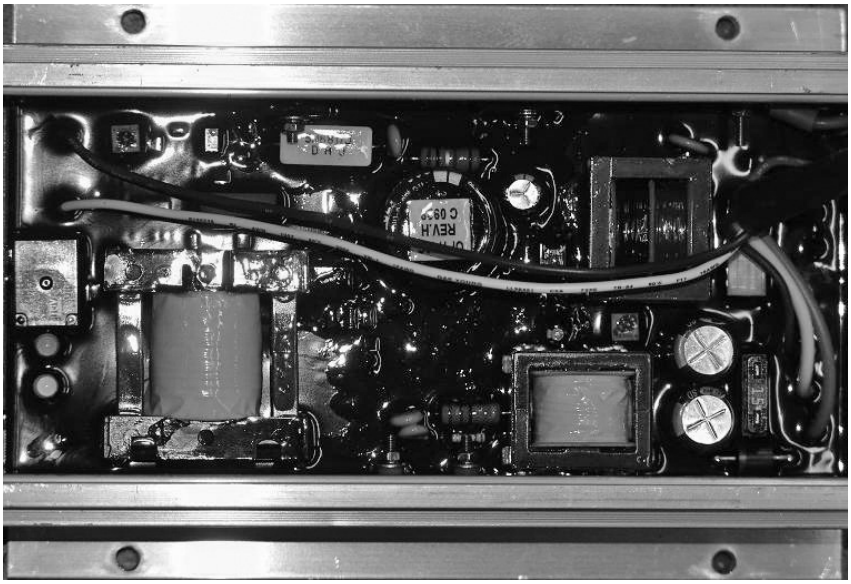

Battery charger shown from inside of control panel enclosure.
Connections are made via an attached harness.

The Generac 2.5 amp 12 volt and 10 amp 12/24 volt battery chargers are designed to work with Generac Industrial Controls to provide the ultimate in automatic battery voltage maintenance.

The 2.5 amp charger is self-regulating and produces instantaneous output current adjustments to keep the battery charged to an optimum level. Battery voltage is read on the control panel digital display.

The 10 amp charger has automatic float and equalize control. It precisely monitors the battery's voltage and automatically activates the correct charging mode. The charge rate is limited and controlled to efficiently and safely maintain ideal battery levels under varying conditions.

The equalize system uses a control circuit to limit charging current to 10 amps. When battery voltage drops below a preset level, charging current increases to 5 amps and then to the 10 amp charge rate if needed. When the battery reaches maximum charge, the charger switches to float mode to supply just enough current to maintain the battery at or above 13/26 volts. Battery voltage and charging current are read at the control panel digital display.

Specifications	2.5A	10A
Nominal Input	120 VAC	120 VAC
Operating AC Line Voltage Range	108 to 132 VAC	108 to 132 VAC
Input AC Line Frequency	50/60 Hz	50/60 Hz
Battery Fuse	N/A	15 A
Nominal Charge Rate	2.5 A	10 A
Equalize Voltage	N/A	13.8/27.6 V
Float Voltage	13.4 V	13.0/26.0 V
Current @ Equalize to Float Transition	N/A	5 A
Battery Under-voltage shutdown	N/A	11/22 V
LED Indicators	No	Yes
AC Line Voltage	N/A	Green LED
Battery Connected and Charging	N/A	Yellow LED
Battery Current Drain	30 mA	30 mA
AC Line Connection	Connector Plug	Connector Plug
Battery Connection	Connector Plug	Connector Plug
Control Connection		AC Power Fail Form Relay Form C 2 A Rating
CUL Recognized	Yes	Yes
NFPA 110 Compliant	No	Yes
AGM Compatible	No	Yes
UL1236	No	Yes
CSA 22.2 No. 107	No	Yes

Generac Power Systems, Inc. | P.O. Box 8 | Waukesha, WI 53187
P: (262) 544-4811 © 2019 Generac Power Systems, Inc. All rights reserved. All specifications are subject to change without notice.

Part No.0191900SBY
Rev. E 08/12/19

EATON CIRCUIT BREAKER DATA LUG INFORMATION

Eaton Series C Circuit Breaker Lugs

			Standard Lug	
Amps	Series	Frame	Eaton Part #	Wire (QTY) Size
15-70	C	G	-	(1) #10-1/0
15-100	C	F	3T100FB	(1) #14-1/0
125-200	C	F	3TA225FD	(1) #4-4/0
225	C	F	3TA225FDK	(1) #6-300MCM
250	C	J	TA250KB	(1) #4-350MCM
300	C	K	TA350K	(1) 250-500MCM
350-400	C	K	3TA400K	(2) 3/0-250MCM
450-500	C	L	TA602LD	(2) 3/0-350MCM
600	C	L	3TA603LDK	(2) 400-500MCM
700-800	C	M	TA800MA2	(3) 3/0-400MCM
900-1,000	C	N	T1200NB3	(4) 3/0-400MCM
1,200	C	N	TA1201NB1	(3) 500-750MCM

Eaton Series G Circuit Breaker Lugs

			Standard Lug	
Amps	Series	Frame	Eaton Part #	Wire (Qty) Size
50-250	G	JG	TA250FJ	(1) #8-350MCM
300-600	G	LG	3TA632LK	(2) #2-500MCM
900-1,200	G	NG	TA1201NB1	(3) 500-750MCM
1,400-1,600	G	RG	T1600RD	(4) 1-600MCM
2,000	G	RG	Lugs Not Included	
2,500	G	RG	Lugs Not Included	

 © 2019 Generac Power Systems, Inc. All rights reserved. All specifications are subject to change without notice.

CRITICAL GRADE SILENCER

SPECIFICATIONS

- 5” INLET/OUTLET
- MATERIAL: ALUMINIZED STEEL
- FINISH: HIGH-TEMP FLAT BLACK PAINT
- SOUND ATTENUATION: 31-35 dBA
- APPROXIMATE WEIGHT: 90 LBS.

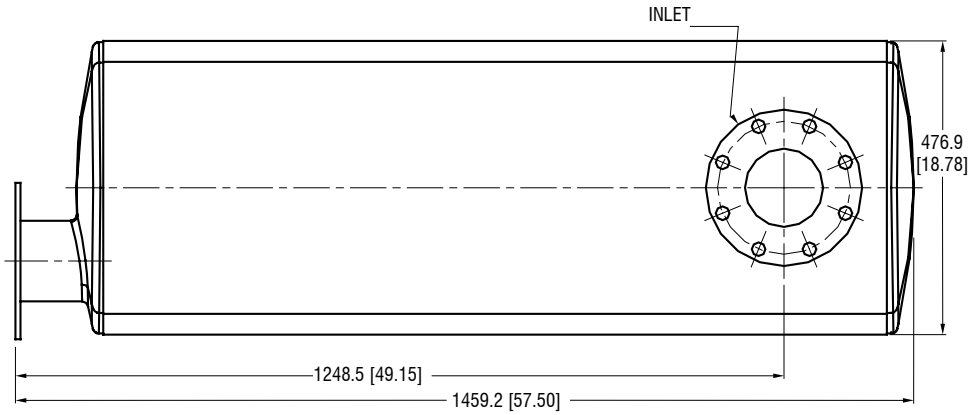

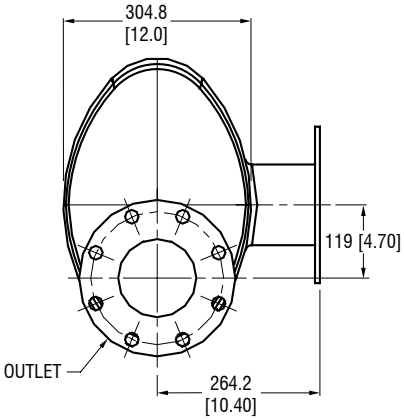

FLANGE DETAIL - INLET AND OUTLET

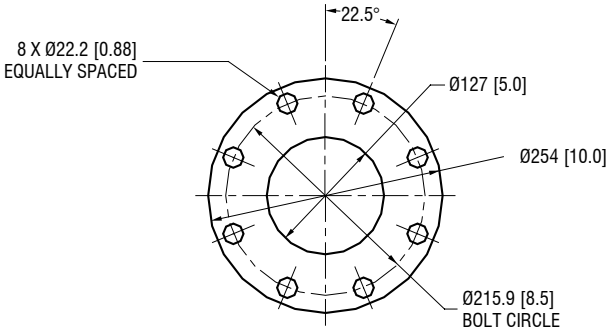

DIMENSIONS: mm [INCHES]

Generac Power Systems, Inc. | P.O. Box 8 | Waukesha, WI 53187
P: (262) 544-4811 © 2015 Generac Power Systems, Inc. All rights reserved. All specifications are subject to change without notice.

Part No.065803
Rev. B 07/20/15

COOLANT HEATER OPTION
2000 WATT, 240VAC

SPECIFICATIONS:

VOLTAGE: 240VAC

HEAT POWER: 2000W

FIXED THERMOSTAT: 80°-100°F

HEATING ELEMENT: INCOLOY 800

MAXIMUM PRESSURE: 90 PSI (620 kPa)

PLUG NEMA STD: 6-15P

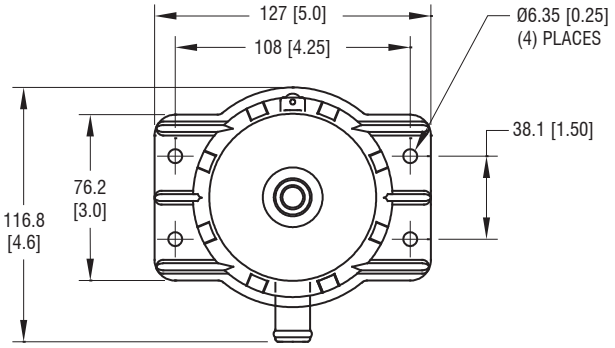

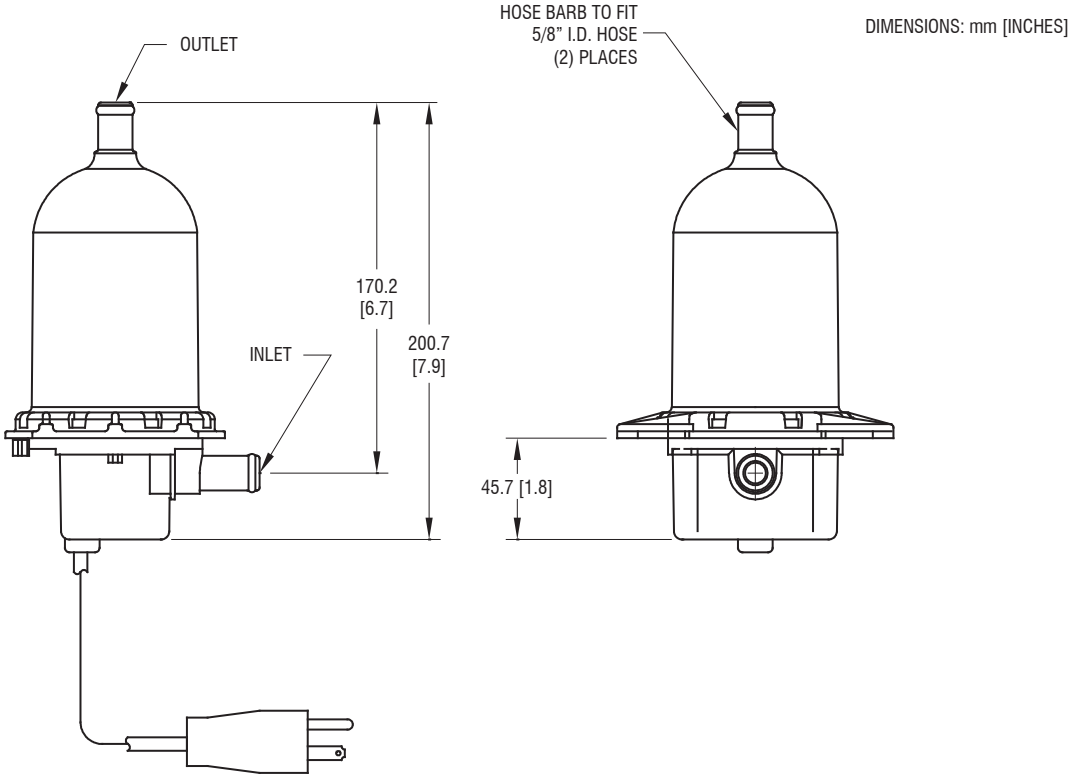

 © 2015 Generac Power Systems, Inc. All rights reserved. All specifications are subject to change without notice.

EXHAUST FLEX, 4”

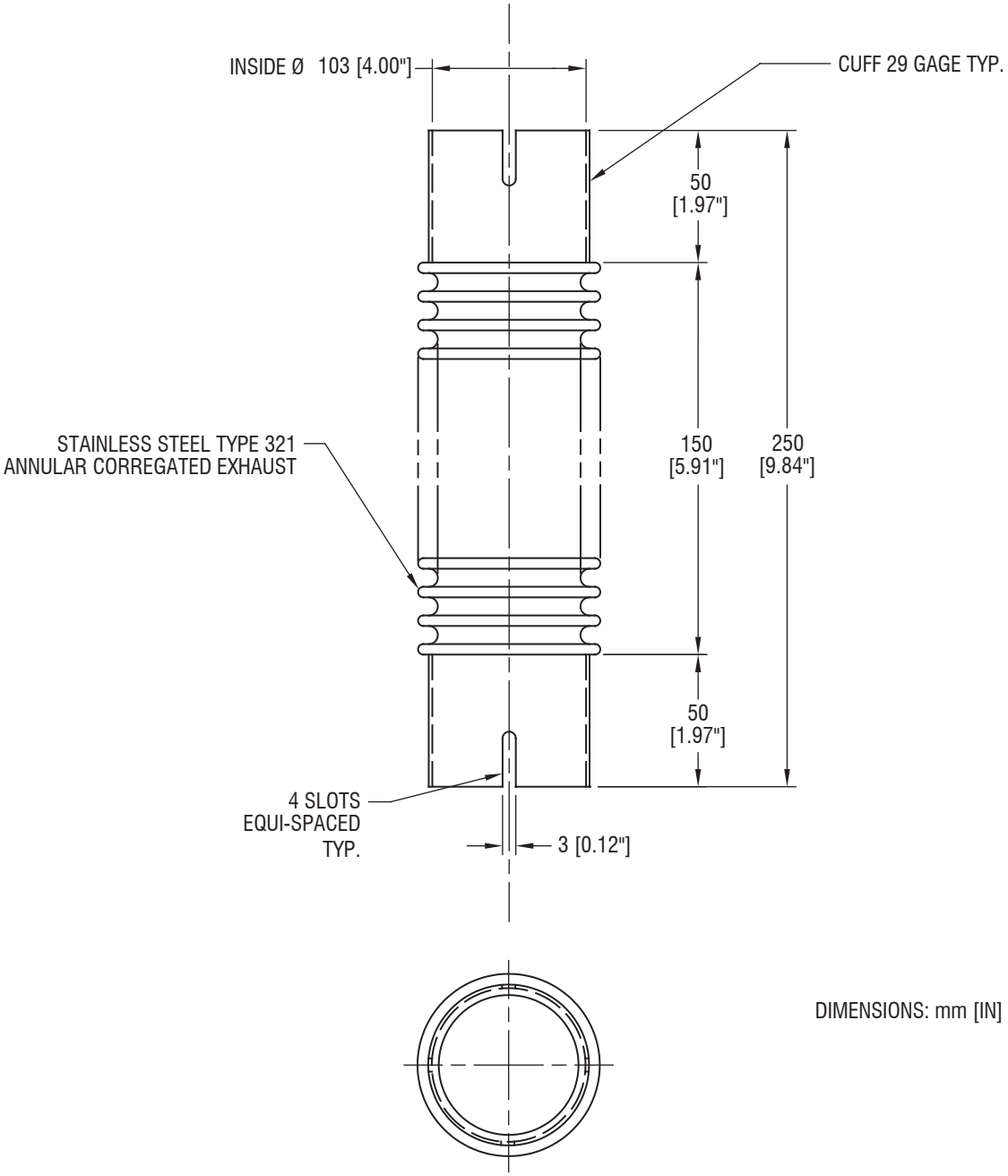

DIMENSIONS: mm [IN]

 © 2015 Generac Power Systems, Inc. All rights reserved. All specifications are subject to change without notice.

EXHAUST SYSTEMS EXPLODED VIEW
8.7L & 10.3L FPT, 200-300KW

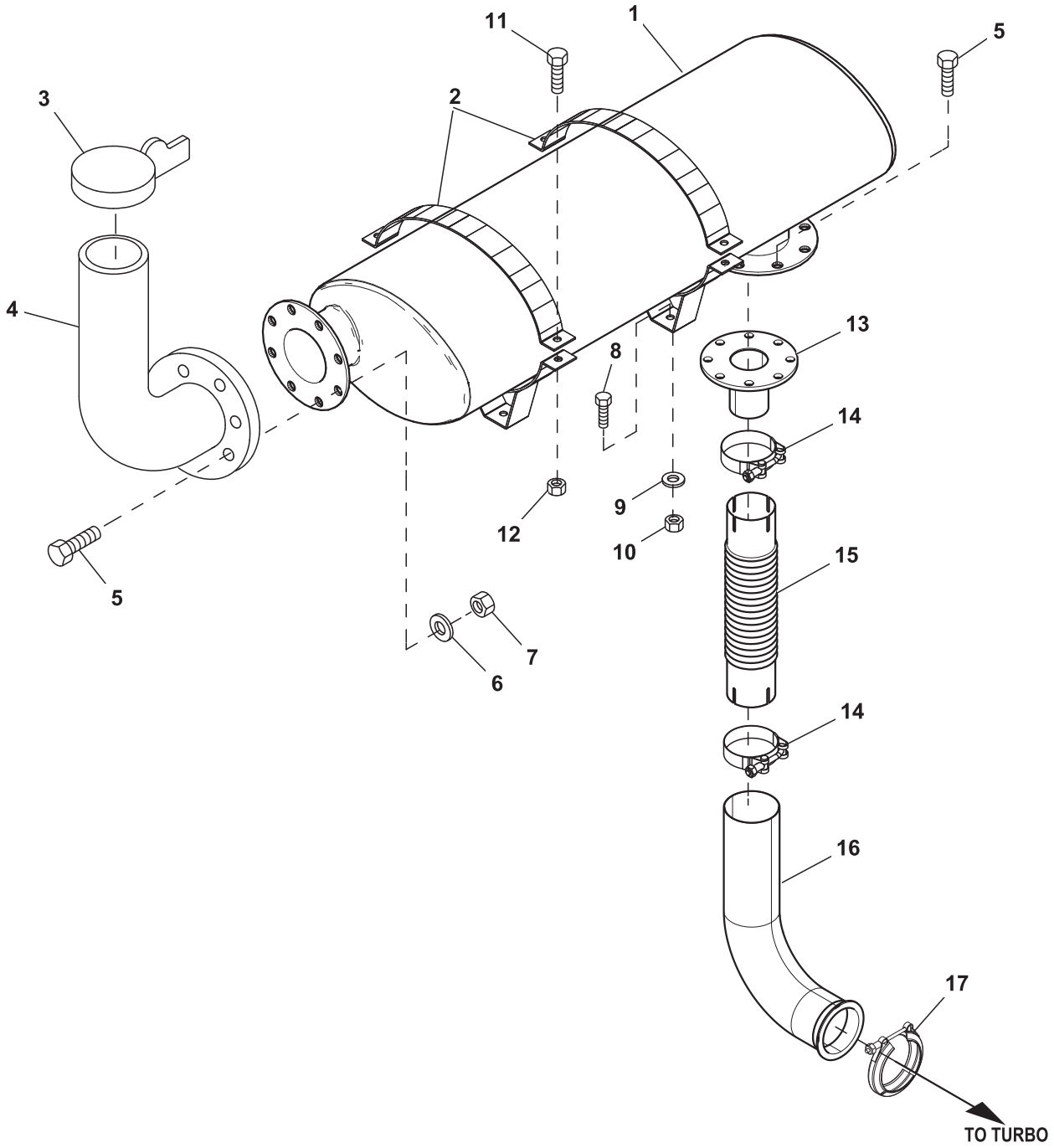

EXHAUST SYSTEMS EXPLODED VIEW
8.7L & 10.3L FPT, 200-300KW

ITEM	PART #	QTY.	DESCRIPTION
1	065803	1	CRIT MUFFLER 5 FLANG
2	065804	2	MOUNTING BAND-MUFFLER
3	0H6667	1	CAP RAIN 6”
4	064998	1	EXH OUT EXTENSION
5	023169	16	SCREW HHC 3/4-10 X 2 G5
6	023171	16	WASHER LOCK 3/4
7	023170	16	NUT HEX 3/4-10 STEEL
8	049814	4	SCREW HHC M10-1.5 X 20 G8.8
9	022131	4	WASHER FLAT 3/8-M10 ZINC
10	052859	4	NUT LOCK FL MM10-1.50
11	0A1663	4	SCREW HHC 3/8-16 X 3”
12	022241	4	NUT HEX 3/8-16 STEEL
13	0H5126	1	ASSY EXHAUST FLANGE D8.7 G17
14	0C3433C	2	CLAMP BAND 4.0”
15	0A5215D	1	FLEX PIPE 4”
16	0H5099	1	EXH EL ASSY OPEN SET 8.7L G17
	0H6672	1	EXH EL ASSY OPEN SET 10.3L G17
17	0H33380350	REF	CLAMP, V-BAND TURBO
	(2) 0H5971	REF	PIPE CLIP

NOTES (UNLESS OTHERWISE SPECIFIED)

(1) SUPPLIED WITH 8.7L ENGINE

(1) SUPPLIED IN KIT 0H5009E

Generac Power Systems, Inc. | P.O. Box 8 | Waukesha, WI 53187
P: (262) 544-4811 © 2015 Generac Power Systems, Inc. All rights reserved. All specifications are subject to change without notice.

Part No. 0H4983
Rev. D 10/25/12

REMOTE EMERGENCY STOP SWITCH
Break Glass, H-Panel

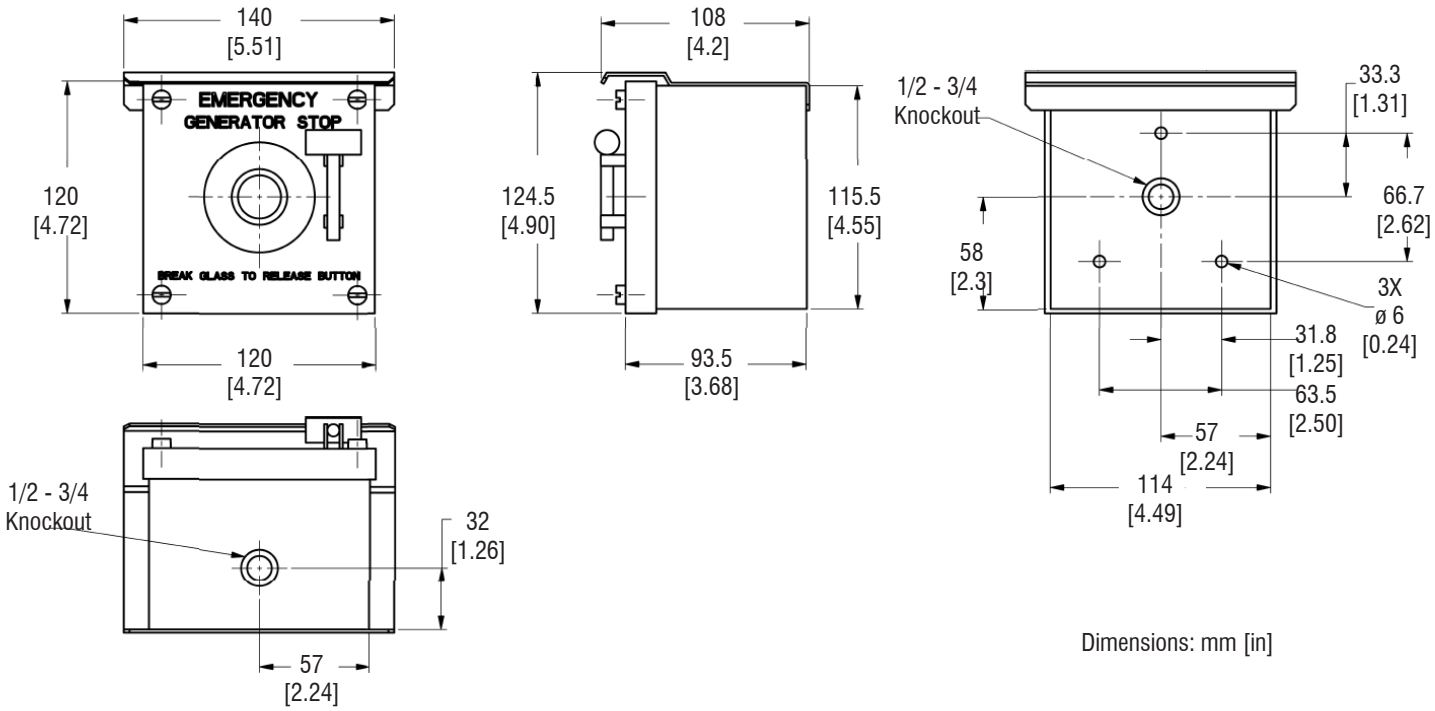

Dimensions: mm [in]

Specifications

Generac Part Number: 061129D
Surface Mount, NEMA 3R
2 Replacement Glasses
Painted Steel Enclosure
Contact Rating: 10A at 120V

Part No. 0L6262
Rev. B 07/10/19

REMOTE EMERGENCY STOP SWITCH
Break Glass, H-Panel

Wiring - H-Panel

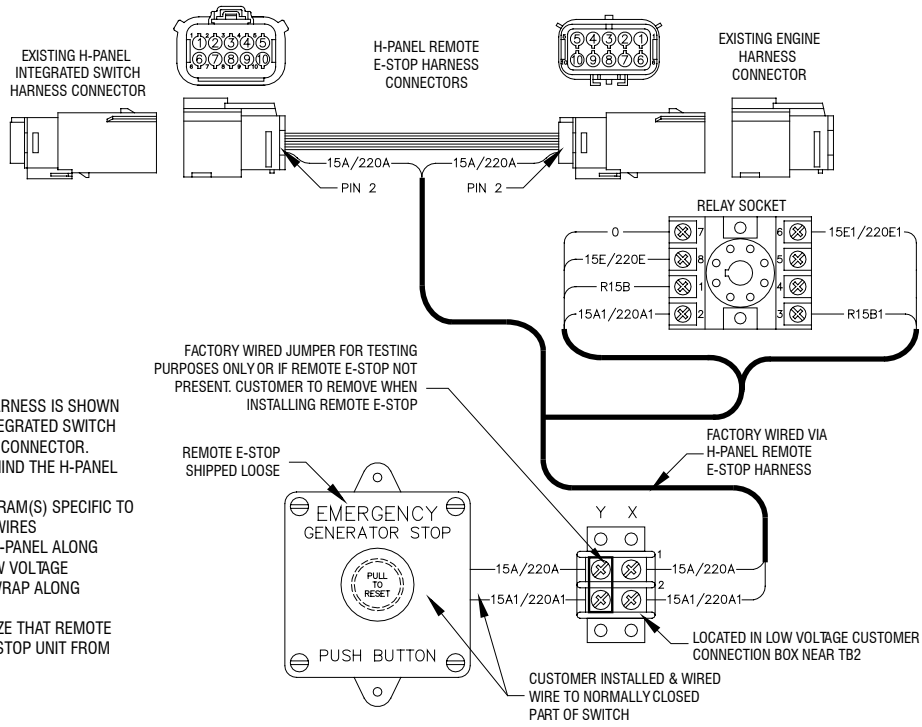

NOTES:
1) THE H-PANEL REMOTE E-STOP HARNESS IS SHOWN IN POSITION BETWEEN EXISTING INTEGRATED SWITCH CONNECTOR AND ENGINE HARNESS CONNECTOR. CONNECTION POINT IS LOCATED BEHIND THE H-PANEL HINGED COVER
2) SEE WIRING OR SCHEMATIC DIAGRAM(S) SPECIFIC TO UNIT FOR INFORMATION ON OTHER WIRES
3) FACTORY RUNS WIRING OUT OF H-PANEL ALONG ENGINE HARNESS THAT ENTERS LOW VOLTAGE CUSTOMER CONNECTION BOX. TIE WRAP ALONG HARNESS AS NEEDED.
4) THE H-PANEL WILL NOT RECOGNIZE THAT REMOTE E-STOP WAS ACTIVATED, BUT WILL STOP UNIT FROM RUNNING

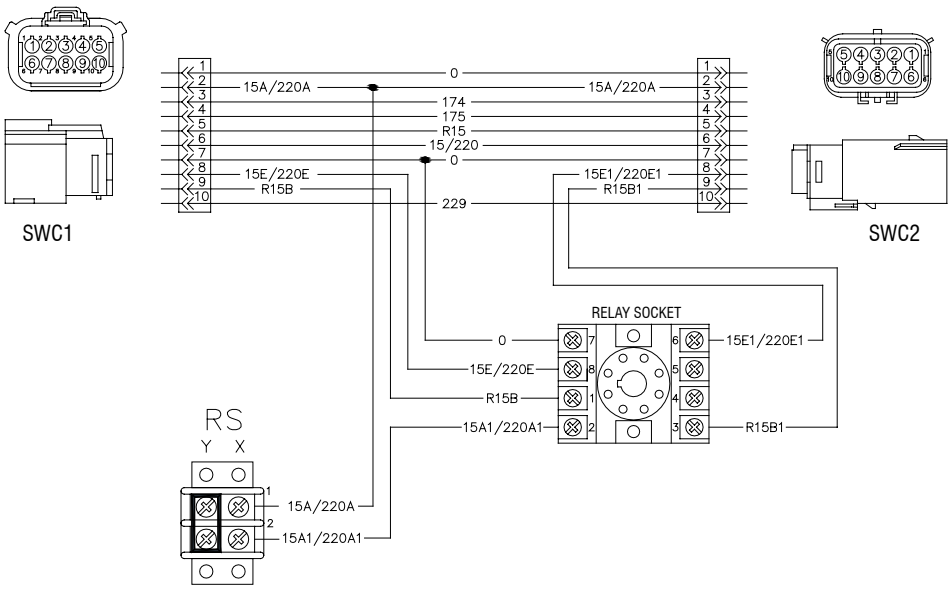

Generac Power Systems, Inc. | P.O. Box 8 | Waukesha, WI 53187
P: (262) 544-4811 © 2019 Generac Power Systems, Inc. All rights reserved. All specifications are subject to change without notice.

Part No. 0L6262
Rev. B 07/10/19

Notes:
1. CONTROL PANEL, (OPTIONAL BATTERY CHARGER INSIDE).
2. 120V, 20A GFCI & 250V, 15A OUTLET (OPTIONAL).
3. CONNECTION POINTS FOR CONTROL WIRES PROVIDED IN THE LOW VOLTAGE CONNECTION BOX (USE LOW VOLTAGE STUB-UP AREA).
4. BATTERY (24 VOLT NEGATIVE GROUND SYSTEM).
5. MAIN LINE CIRCUIT BREAKER (MLCB), AC LOAD LEADS. (DIMENSIONS MAY VARY DUE TO UNIT CONFIGURATION)
6. CENTER OF GRAVITY AND WEIGHT MAY CHANGE DUE TO UNIT OPTIONS.

7. ENGINE SERVICE CONNECTIONS:
   INLET NATURAL GAS = N/A
   INLET DIESEL = 1/2" NPT COUPLING
   RETURN DIESEL = 1/2" NPT COUPLING
   OIL DRAIN = 1/2" NPT COUPLING
   RADIATOR DRAIN = N/A
   FLEX PIPE OUTLET = N/A
   EXHAUST OUTLET = 4" O.D. PIPE

***** SEE GENERATOR SIZING GUIDE FOR FUEL PIPE SIZING TO SUIT APPLICATION *****

8. AUXILARY AC CONNECTION FOR UNIT OPTIONS ARE LOCATED IN HIGH VOLTAGE CONNECTION BOX, UNLESS AN OPTIONAL LOAD CENTER IS INSTALLED.
9. EXHAUST PIPES MAY BE ROTATED TO ALLOW MUFFLER TO POINT OUT TO THE RIGHT OR LEFT SIDE OF GENERATOR. (MAY NOT APPLY TO ALL UNITS)
10. GENERATOR SET MUST BE INSTALLED SUCH THAT FRESH COOLING AIR IS AVAILABLE AND DISCHARGE AIR FROM THE RADIATOR IS NOT RECIRCULATED.
11. BOTTOM OF GENERATOR SET MUST BE ENCLOSED TO PREVENT PEST INTRUSION AND RECIRCULATION OF DISCHARGE AIR AND/OR IMPROPER COOLING AIR FLOW.
12. INSTALL EXHAUST BLANKETS ALONG THIS LINE.
13. CONNECT THE OPEN SET EXHAUST PER NFPA 37
14. BOLTS OR STUDS USED TO MOUNT UNIT TO PAD, OR BASE TANK, SHALL BE 5/8"-11 GRADE 5. USE STANDARD SAE TORQUE SPECS. (FOR INSTALLATION OF FUEL TANK TO PAD REFER TO INSTALL DRAWING OF THE BASE TANK)

ADDITIONAL NOTES:
FOR WEIGHT AND CENTER OF GRAVITY DATA SEE NOTE 6, AND SHEET 3.

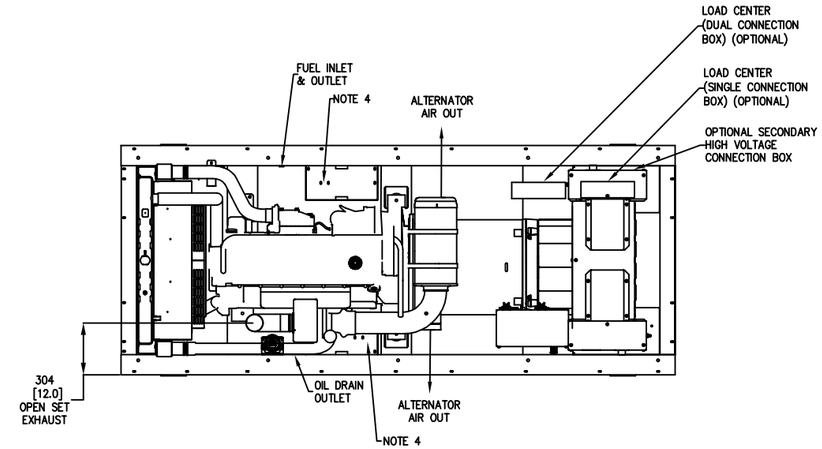

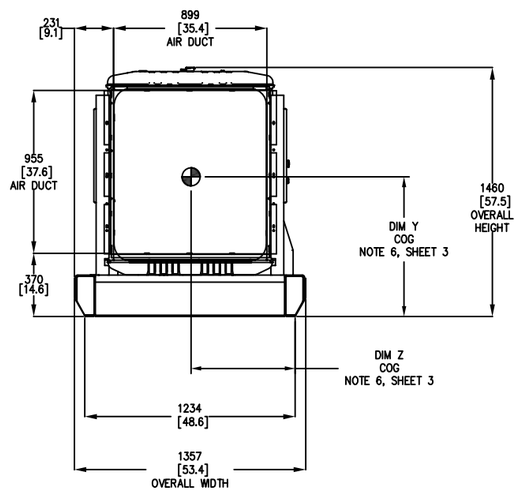

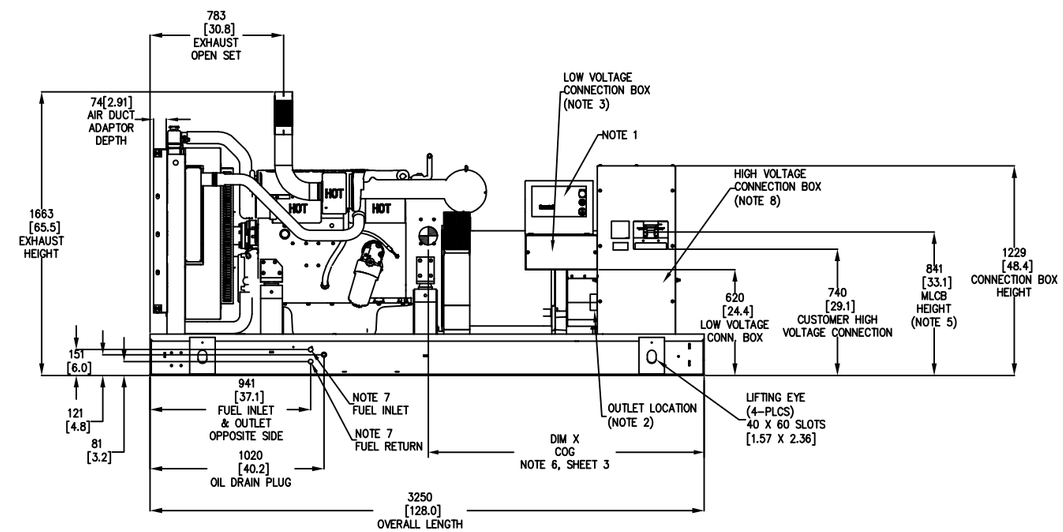

DIMENSIONS ARE IN MILLIMETERS [INCHES]

DRAWING CREATED FROM PRO/ENGINEER 3D FILE. ECO MODIFICATION TO BE APPLIED TO SOLID MODEL ONLY.

INSTALLATION DRAWING

GENERAC POWER SYSTEMS OWNS THE COPYRIGHT OF THIS DRAWING WHICH IS SUPPLIED IN CONFIDENCE AND MUST NOT BE USED FOR ANY PURPOSE OTHER THAN FOR WHICH IT IS SUPPLIED WITHOUT THE EXPRESS WRITTEN CONSENT OF GENERAC POWER SYSTEMS.
© GENERAC POWER SYSTEMS 2013

ELECTRONICALLY APPROVED
INSIDE WINDCHILL

GENERAC

TITLE
OPENSET
D8.7L, 60 HZ: SD200, PD180
SD230, PD207, SD250, PD225

ISSUE DATE: 04/06/2016			
SIZE B	CAGE NO N/A	DWG NO 0J3429	REV E
SCALE 0.025	WT-KG		SHEET 1 of 3

RECOMMENDED ELECTRICAL STUB-UP	
(HIGH VOLTAGE STUB-UP) AC LOAD LEAD CONDUIT FOR PERMANENT MAGNET EXCITATION CONNECTION BOX	
(LOW VOLTAGE STUB-UP)	

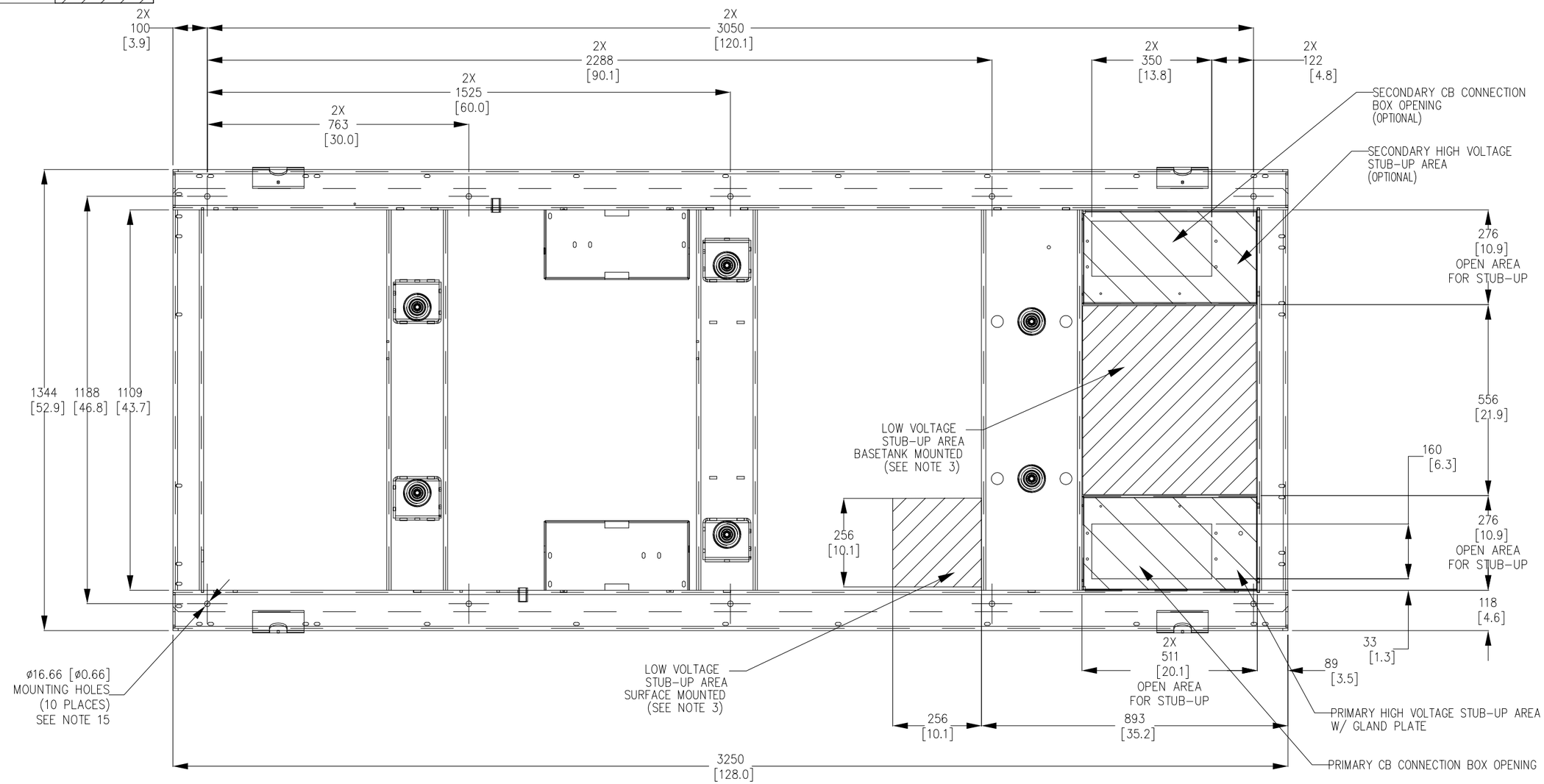

DRAWING CREATED FROM PRO/ENGINEER 3D FILE. ECO MODIFICATION TO BE APPLIED TO SOLID MODEL ONLY.

DIMENSIONS ARE IN MILLIMETERS [INCHES]

INSTALLATION DRAWING

GENERAC POWER SYSTEMS OWNS THE COPYRIGHT OF THIS DRAWING WHICH IS SUPPLIED IN CONFIDENCE AND MUST NOT BE USED FOR ANY PURPOSE OTHER THAN FOR WHICH IT IS SUPPLIED WITHOUT THE EXPRESS WRITTEN CONSENT OF GENERAC POWER SYSTEMS. ©GENERAC POWER SYSTEMS 2013

ELECTRONICALLY APPROVED
INSIDE WINDCHILL

GENERAC

TITLE
STUB-UP
D8.7L, 60HZ; SD200, PD180
SD230, PD207, SD250, PD225

ISSUE DATE:	04/06/2016		
SIZE B	CAGE NO N/A	DWG NO 0J3429	REV E
SCALE 0.025	WT-KG		SHEET 2 of 3

OPEN SET

MODEL	VOLTAGE	WEIGHT	CENTER OF GRAVITY DIM X	CENTER OF GRAVITY DIM Y	CENTER OF GRAVITY DIM Z
SD200, PD180	240V, 1 n	1,962 kg [4,325 lbs]	1789 [70.4]	618 [24.3]	617 [24.3]
SD200, PD180	208V, 240V, 480V	1,976 kg [4,356 lbs]	1784 [70.2]	617 [24.3]	
SD200, PD180	600V	1,968 kg [4,339 lbs]	1787 [70.3]	618 [24.3]	
SD230, PD207	208V, 240V, 480V	2,108 kg [4,647 lbs]	1723 [67.8]	614 [24.2]	
SD230, PD207	600V	2,100 kg [4,630 lbs]	1726 [67.9]		
SD250, PD225	208V, 240V, 480V	2,167 kg [4,777 lbs]	1702 [67.0]	613 [24.1]	
SD250, PD225	600V	2,100 kg [4,630 lbs]	1704 [67.1]		
SD200, PD180, SD230, PD207, SD250, PD225	208V, 240V, 480V (300kW UPSIZE)	2,307 kg [5,086 lbs]	1645 [64.8]	610 [24.0]	
SD200, PD180, SD230, PD207, SD250, PD225	600V (300kW UPSIZE)	2,160 kg [4,762 lbs]	1704 [67.1]	613 [24.1]	
SD200, PD180, SD230, PD207, SD250, PD225	208V, 240V, 480V (350kW UPSIZE)	2,317 kg [5,108 lbs]	1654 [65.1]	644 [25.4]	639 [25.2]
SD200, PD180, SD230, PD207, SD250, PD225	600V (350kW UPSIZE)	2,297 kg [5,064 lbs]	1648 [64.9]	610 [24.0]	617 [24.3]

NOTE:
CENTER OF GRAVITY AND WEIGHT MAY CHANGE DUE TO UNIT OPTIONS

STD ENCLOSURE, STEEL

MODEL	VOLTAGE	WEIGHT	CENTER OF GRAVITY DIM X	CENTER OF GRAVITY DIM Y	CENTER OF GRAVITY DIM Z
SD200, PD180	240V, 1 n	2,389 kg [5,267 lbs]	1869 [73.6]	700 [27.6]	561 [22.1]
SD200, PD180	208V, 240V, 480V	2,403 kg [5,298 lbs]	1865 [73.4]	699 [27.5]	
SD200, PD180	600V	2,395 kg [5,280 lbs]	1867 [73.5]	700 [27.5]	
SD230, PD207	208V, 240V, 480V	2,535 kg [5,589 lbs]	1811 [71.3]	692 [27.2]	
SD230, PD207	600V	2,527 kg [5,571 lbs]	1813 [71.4]		
SD250, PD225	208V, 240V, 480V	2,594 kg [5,719 lbs]	1791 [70.5]	689 [27.1]	
SD250, PD225	600V	2,587 kg [5,703 lbs]	1793 [70.6]		
SD200, PD180, SD230, PD207, SD250, PD225	208V, 240V, 480V (300kW UPSIZE)	2,734 kg [6,027 lbs]	1739 [68.5]	682 [26.9]	
SD200, PD180, SD230, PD207, SD250, PD225	600V (300kW UPSIZE)	2,587 kg [5,703 lbs]	1793 [70.6]	689 [27.1]	
SD200, PD180, SD230, PD207, SD250, PD225	208V, 240V, 480V (350kW UPSIZE)	2,744 kg [6,049 lbs]	1746 [68.7]	711 [28.0]	580 [22.8]
SD200, PD180, SD230, PD207, SD250, PD225	600V (350kW UPSIZE)	2,724 kg [6,005 lbs]	1742 [68.6]	683 [26.9]	561 [22.1]

STD ENCLOSURE, ALUMINUM

WEIGHT	CENTER OF GRAVITY DIM X	CENTER OF GRAVITY DIM Y	CENTER OF GRAVITY DIM Z
2,177 kg [4,801 lbs]	1850 [72.9]	663 [26.1]	556 [21.9]
2,191 kg [4,831 lbs]	1846 [72.7]	662 [26.1]	
2,183 kg [4,814 lbs]	1848 [72.8]	663 [26.1]	
2,323 kg [5,122 lbs]	1787 [70.4]	657 [25.9]	
2,315 kg [5,105 lbs]	1790 [70.5]		
2,382 kg [5,252 lbs]	1766 [69.5]	654 [25.7]	
2,375 kg [5,237 lbs]	1768 [69.6]		
2,522 kg [5,561 lbs]	1711 [67.4]	649 [25.6]	
2,375 kg [5,237 lbs]	1768 [69.6]	654 [25.8]	
2,532 kg [5,583 lbs]	1719 [67.7]	680 [26.8]	577 [22.7]
2,512 kg [5,539 lbs]	1714 [67.5]	650 [25.6]	556 [21.9]

L1A ENCLOSURE, STEEL

MODEL	VOLTAGE	WEIGHT	CENTER OF GRAVITY DIM X	CENTER OF GRAVITY DIM Y	CENTER OF GRAVITY DIM Z
SD200, PD180	240V, 1 n	2,527 kg [5,571 lbs]	1790 [73.6]	719 [28.3]	564 [22.2]
SD200, PD180	208V, 240V, 480V	2,541 kg [5,602 lbs]	1786 [70.3]	718 [28.3]	
SD200, PD180	600V	2,533 kg [5,584 lbs]	1789 [70.4]		
SD230, PD207	208V, 240V, 480V	2,673 kg [5,893 lbs]	1739 [71.3]	710 [28.0]	
SD230, PD207	600V	2,665 kg [5,875 lbs]	1741 [68.6]		
SD250, PD225	208V, 240V, 480V	2,732 kg [6,023 lbs]	1722 [67.8]	707 [27.8]	
SD250, PD225	600V	2,725 kg [6,007 lbs]	1724 [67.9]		
SD200, PD180, SD230, PD207, SD250, PD225	208V, 240V, 480V (300kW UPSIZE)	2,872 kg [6,332 lbs]	1676 [66.0]	700 [27.5]	
SD200, PD180, SD230, PD207, SD250, PD225	600V (300kW UPSIZE)	2,725 kg [6,007 lbs]	1724 [67.9]	707 [27.8]	
SD200, PD180, SD230, PD207, SD250, PD225	208V, 240V, 480V (350kW UPSIZE)	2,882 kg [6,354 lbs]	1683 [66.3]	727 [28.6]	581 [22.9]
SD200, PD180, SD230, PD207, SD250, PD225	600V (350kW UPSIZE)	2,862 kg [6,309 lbs]	1679 [66.1]	700 [27.5]	564 [22.2]

L1A ENCLOSURE, ALUMINUM

WEIGHT	CENTER OF GRAVITY DIM X	CENTER OF GRAVITY DIM Y	CENTER OF GRAVITY DIM Z
2,237 kg [4,931 lbs]	1812 [71.3]	673 [26.5]	557 [21.9]
2,251 kg [4,962 lbs]	1808 [71.2]		
2,243 kg [4,945 lbs]	1810 [71.3]		
2,383 kg [5,253 lbs]	1753 [69.0]	666 [26.2]	
2,375 kg [5,236 lbs]	1755 [69.1]		
2,442 kg [5,383 lbs]	1733 [68.2]	664 [26.1]	
2,435 kg [5,368 lbs]	1735 [68.3]		
2,582 kg [5,692 lbs]	1682 [66.2]	658 [25.9]	
2,435 kg [5,368 lbs]	1735 [68.3]	664 [26.1]	
2,592 kg [5,714 lbs]	1689 [66.5]	689 [27.1]	577 [22.7]
2,572 kg [5,670 lbs]	1684 [66.3]	659 [25.9]	558 [22.0]

L2A ENCLOSURE, STEEL

MODEL	VOLTAGE	WEIGHT	CENTER OF GRAVITY DIM X	CENTER OF GRAVITY DIM Y	CENTER OF GRAVITY DIM Z
SD200, PD180	240V, 1 n	2,634 kg [5,807 lbs]	1883 [74.2]	825 [32.5]	566 [22.3]
SD200, PD180	208V, 240V, 480V	2,648 kg [5,838 lbs]	1879 [74.0]	823 [32.4]	
SD200, PD180	600V	2,640 kg [5,820 lbs]	1882 [74.1]		
SD230, PD207	208V, 240V, 480V	2,780 kg [6,129 lbs]	1829 [72.0]	811 [31.9]	
SD230, PD207	600V	2,772 kg [6,111 lbs]	1832 [72.1]		
SD250, PD225	208V, 240V, 480V	2,839 kg [6,259 lbs]	1811 [71.3]	805 [31.7]	
SD250, PD225	600V	2,832 kg [6,243 lbs]	1813 [71.4]		
SD200, PD180, SD230, PD207, SD250, PD225	208V, 240V, 480V (300kW UPSIZE)	2,979 kg [6,567 lbs]	1763 [69.4]	793 [31.2]	
SD200, PD180, SD230, PD207, SD250, PD225	600V (300kW UPSIZE)	2,832 kg [6,243 lbs]	1813 [71.4]	806 [31.7]	
SD200, PD180, SD230, PD207, SD250, PD225	208V, 240V, 480V (350kW UPSIZE)	2,989 kg [6,589 lbs]	1769 [69.6]	819 [32.2]	583 [22.9]
SD200, PD180, SD230, PD207, SD250, PD225	600V (350kW UPSIZE)	2,969 kg [6,545 lbs]	1765 [69.5]	794 [31.3]	566 [22.3]

L2A ENCLOSURE, ALUMINUM

WEIGHT	CENTER OF GRAVITY DIM X	CENTER OF GRAVITY DIM Y	CENTER OF GRAVITY DIM Z
2,283 kg [5,033 lbs]	1858 [73.2]	727 [28.6]	558 [22.0]
2,297 kg [5,064 lbs]	1854 [73.0]		
2,289 kg [5,046 lbs]	1856 [73.1]		
2,429 kg [5,355 lbs]	1798 [70.8]	717 [28.2]	
2,421 kg [5,337 lbs]	1800 [70.9]	718 [28.3]	
2,488 kg [5,485 lbs]	1777 [70.0]	713 [28.1]	559 [22.0]
2,481 kg [5,469 lbs]	1779 [70.0]	714 [28.2]	
2,628 kg [5,793 lbs]	1724 [67.9]	705 [27.8]	
2,481 kg [5,469 lbs]	1779 [70.0]	714 [28.1]	
2,638 kg [5,815 lbs]	1731 [68.2]	735 [28.9]	578 [22.8]
2,618 kg [5,771 lbs]	1727 [68.0]	706 [27.8]	559 [22.0]

DRAWING CREATED FROM PRO/ENGINEER 3D FILE. ECO MODIFICATION TO BE APPLIED TO SOLID MODEL ONLY.

INSTALLATION DRAWING

GENERAC POWER SYSTEMS OWNS THE COPYRIGHT OF THIS DRAWING WHICH IS SUPPLIED IN CONFIDENCE AND MUST NOT BE USED FOR ANY PURPOSE OTHER THAN FOR WHICH IT IS SUPPLIED WITHOUT THE EXPRESS WRITTEN CONSENT OF GENERAC POWER SYSTEMS.
© GENERAC POWER SYSTEMS 2013

ELECTRONICALLY APPROVED
INSIDE WINDCHILL

GENERAC

TITLE
WEIGHT & COG
D8.7L, 60 HZ; SD200, PD180
SD230, PD207, SD250, PD225

ISSUE DATE: 04/06/2016

SIZE	CAGE NO	DWG NO	REV
B	N/A	0J3429	E

SCALE 0.025 | WT-KG | SHEET 3 of 3

LEGEND

AH1	– ALARM HORN	GND	– GROUND BAR CONNECTION
ALT	– DC CHARGE ALTERNATOR	IFT	– INTERFACE TRANSFORMER
AVR	– AUTO VOLTAGE REGULATOR	J_	– ENGINE CONTROL MODULE CONN.
BCC	– BATTERY CHARGER CONNECTOR	LD	– LEAK DETECTOR
BCH	– BATTERY CHARGER	MLCB	– MAIN LINE CIRCUIT BREAKER
CAND	– CAN BUS DIAGNOSTIC CONNECTOR	MOD	– MODEM CONNECTOR
CB	– CIRCUIT BREAKER DPE	NB	– NEUTRAL BLOCK
CO	– CROSS OVER CONNECTOR	R1	– RESISTOR
COM	– COMMUNICATION CONNECTOR	RB_	– RELAY BOARD
CT_	– CURRENT TRANSFORMER	RB_A	– RELAY BOARD CONNECTOR
DB	– DIODE BRIDGE	SC	– STARTER CONTACTOR
EDC	– ENGINE DIGITAL CONTROL	SM	– STARTER MOTOR
ES1	– EMERGENCY STOP SWITCH	SW1	– OFF/AUTO/MANUAL SWITCH
EXC	– EXCITER	SWC	– SWITCH CONNECTOR
F_	– FUSE	TB_	– TERMINAL BLOCK
FLS_	– FUEL LEVEL SENDER	WLS_	– COOLANT LEVEL SENDER
GFCI	– GROUND FAULT CIRCUIT INTERRUPT		

NOTE: ALL WIRES 18 AWG 300V UL LISTED UNLESS SHOWN OTHERWISE

AWG SIZE

12

COMPONENTS LOCATED IN ALTERNATOR CONNECTION BOX

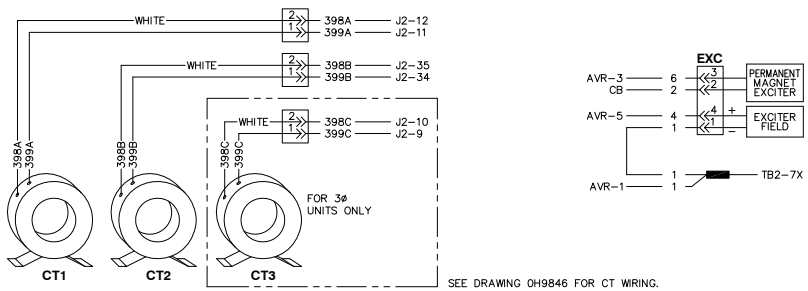

SEE DRAWING 0H9846 FOR CT WIRING.

COMPONENTS LOCATED IN HIGH VOLTAGE CUSTOMER CONNECTION MODULE

CONNECTIONS FOR 1Ø UNIT

NOTE: ALL WIRES IN THIS SECTION ARE 600V RATED

CONNECTIONS FOR 3Ø UNIT

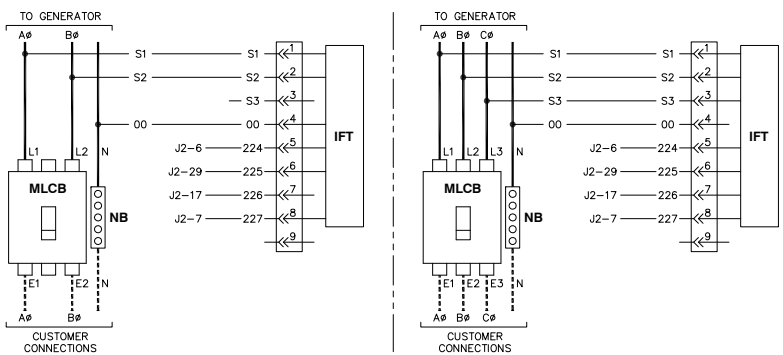

WIRING - DIAGRAM

REVISION: H-9136-D

D8.7L/D10.3L/D12.9L G17 24V

DATE: 6/8/11

DRAWING #: 0H9867

COMPONENTS LOCATED IN HIGH VOLTAGE CUSTOMER CONNECTION MODULE

NOTE: ALL WIRES ON THIS PAGE ARE 600V RATED

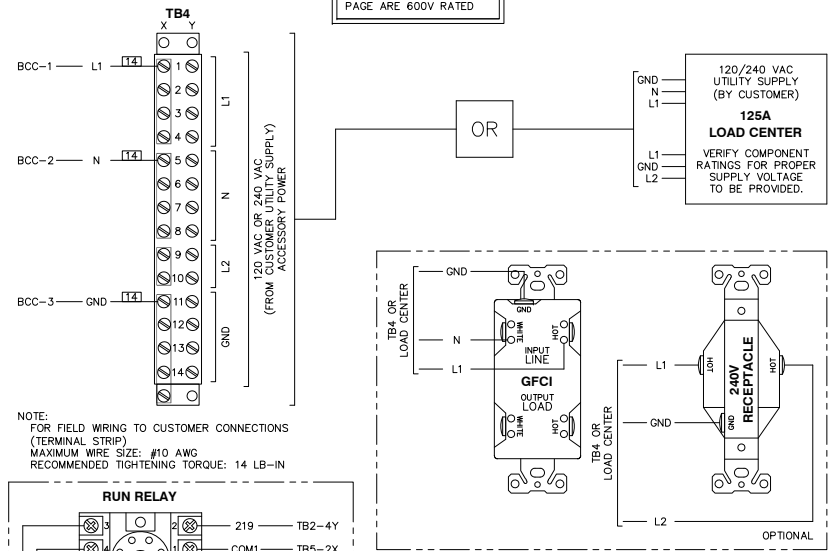

NOTE:
FOR FIELD WIRING TO CUSTOMER CONNECTIONS (TERMINAL STRIP)
MAXIMUM WIRE SIZE: #10 AWG
RECOMMENDED TIGHTENING TORQUE: 14 LB-IN

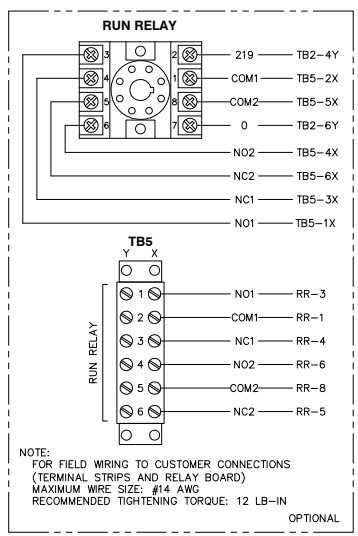

NOTE:
FOR FIELD WIRING TO CUSTOMER CONNECTIONS (TERMINAL STRIPS AND RELAY BOARD)
MAXIMUM WIRE SIZE: #14 AWG
RECOMMENDED TIGHTENING TORQUE: 12 LB-IN

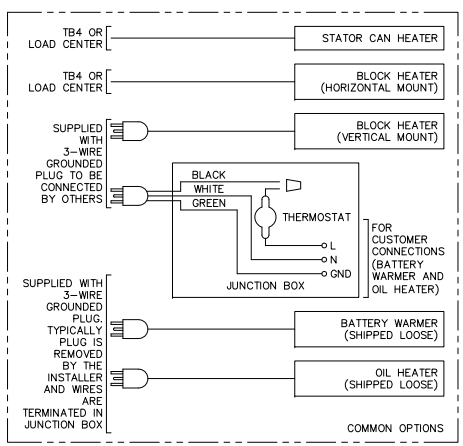

WIRING - DIAGRAM

REVISION: H-9136-D

D8.7L/D10.3L/D12.9L G17 24V

DATE: 6/8/11

DRAWING #: 0H9867

COMPONENTS LOCATED ON LOW VOLTAGE CUSTOMER CONNECTION PANEL

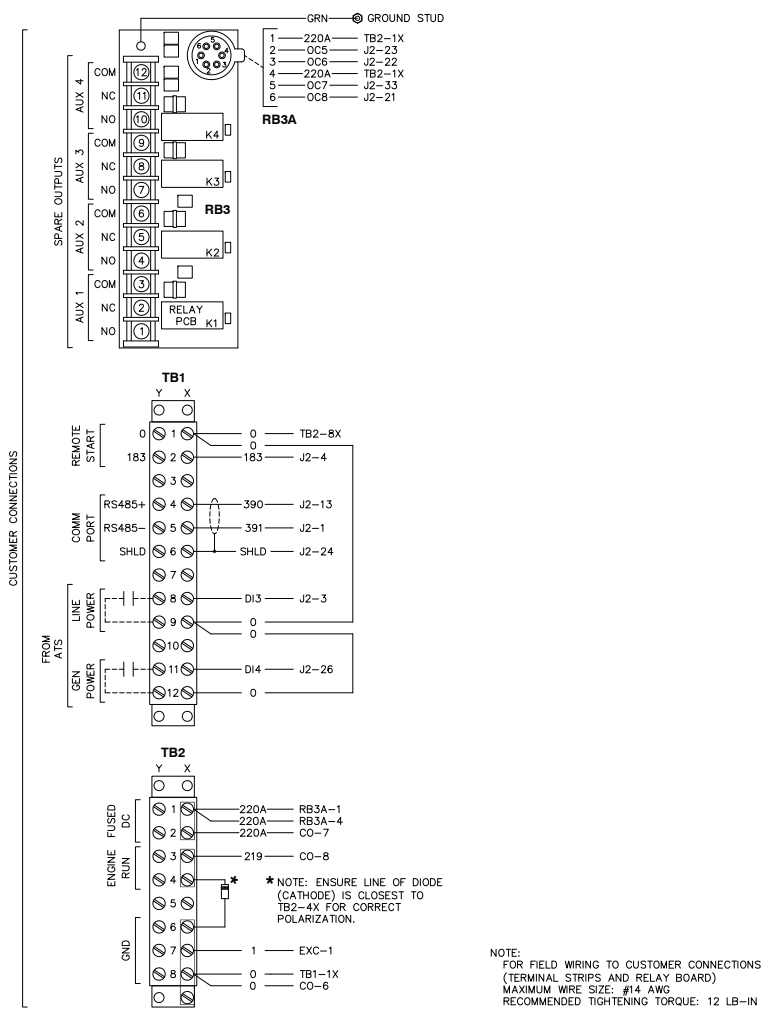

NOTE:
FOR FIELD WIRING TO CUSTOMER CONNECTIONS
(TERMINAL STRIPS AND RELAY BOARD)
MAXIMUM WIRE SIZE: #14 AWG
RECOMMENDED TIGHTENING TORQUE: 12 LB-IN

WIRING - DIAGRAM
D8.7L/D10.3L/D12.9L G17 24V
DRAWING #: 0H9867

REVISION: H-9136-D
DATE: 6/8/11

COMPONENTS LOCATED IN CONTROL PANEL

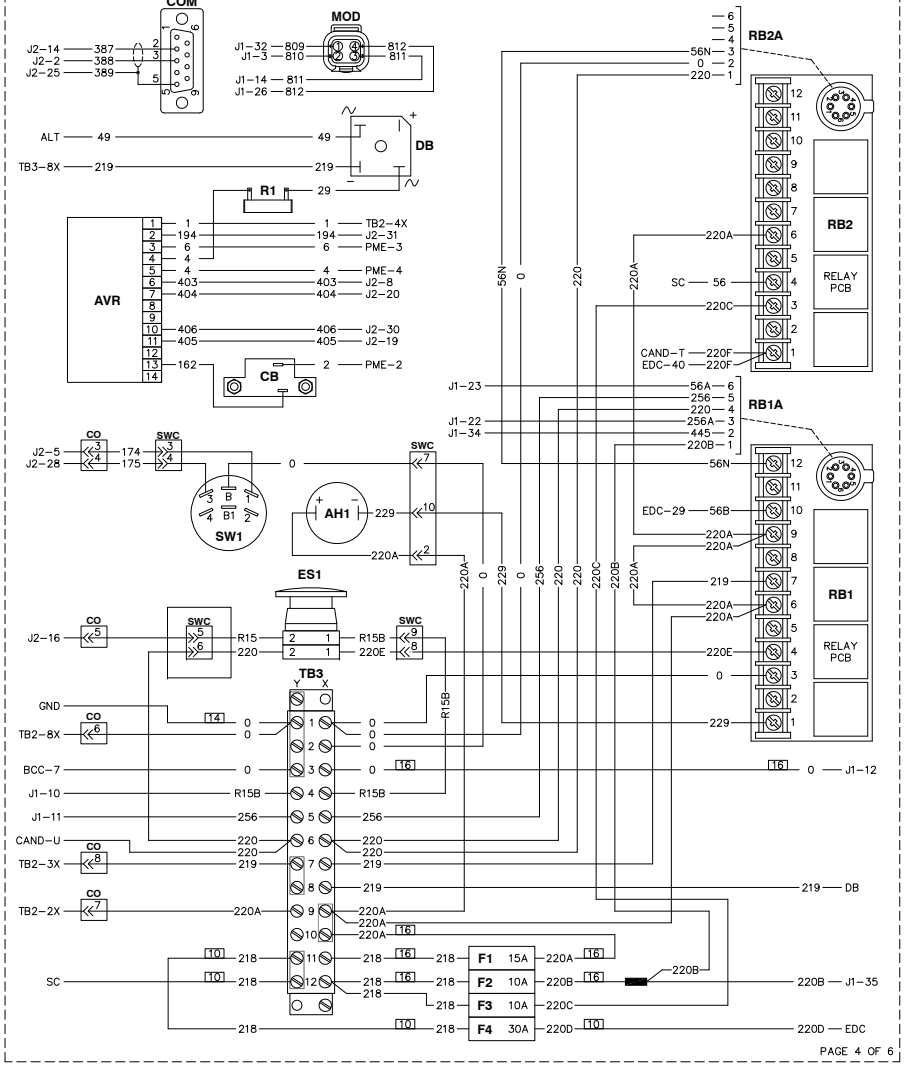

WIRING - DIAGRAM
D8.7L/D10.3L/D12.9L G17 24V
DRAWING #: 0H9867

REVISION: H-9136-D
DATE: 6/8/11

COMPONENTS LOCATED ON ENGINE

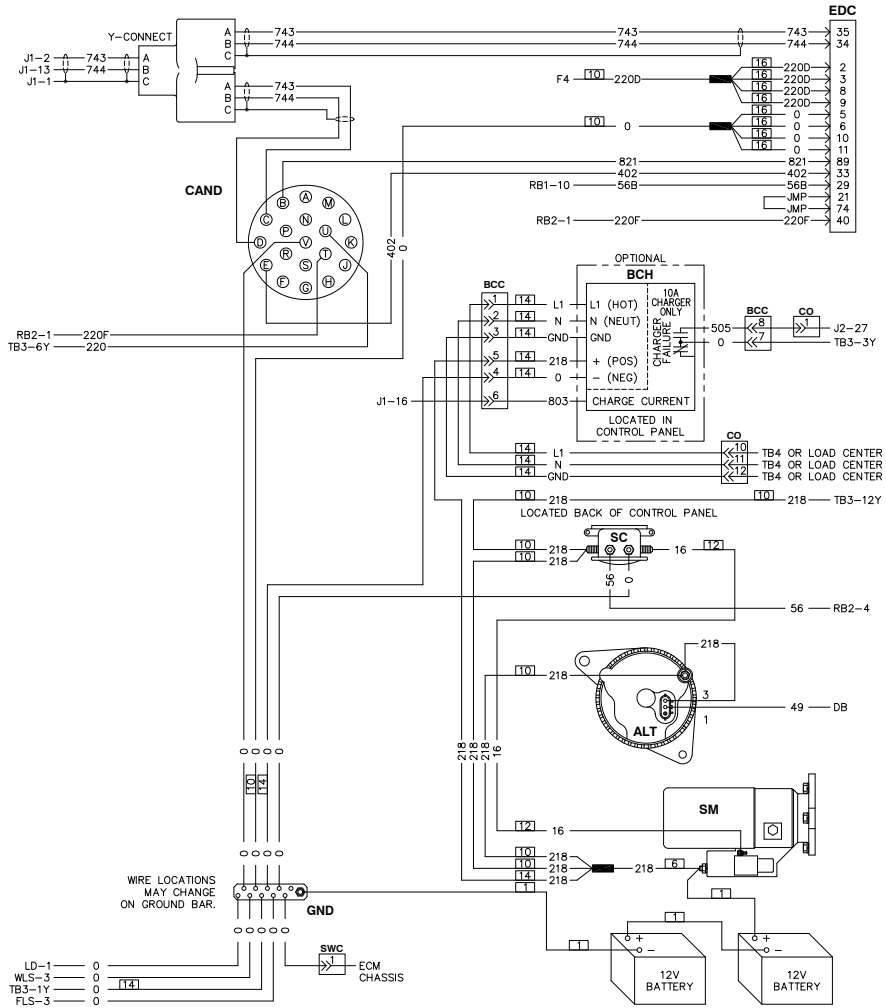

WIRING - DIAGRAM

REVISION: H-9136-D

D8.7L/D10.3L/D12.9L G17 24V

DATE: 6/8/11

DRAWING #: 0H9867

COMPONENTS LOCATED ON ENGINE

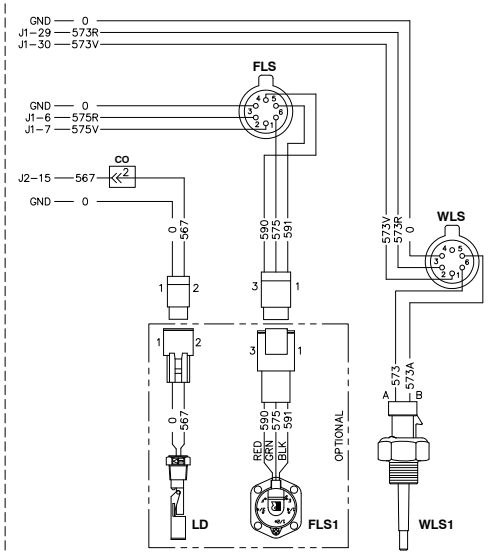

WIRING - DIAGRAM

REVISION: H-9136-D

D8.7L/D10.3L/D12.9L G17 24V

DATE: 6/8/11

DRAWING #: 0H9867

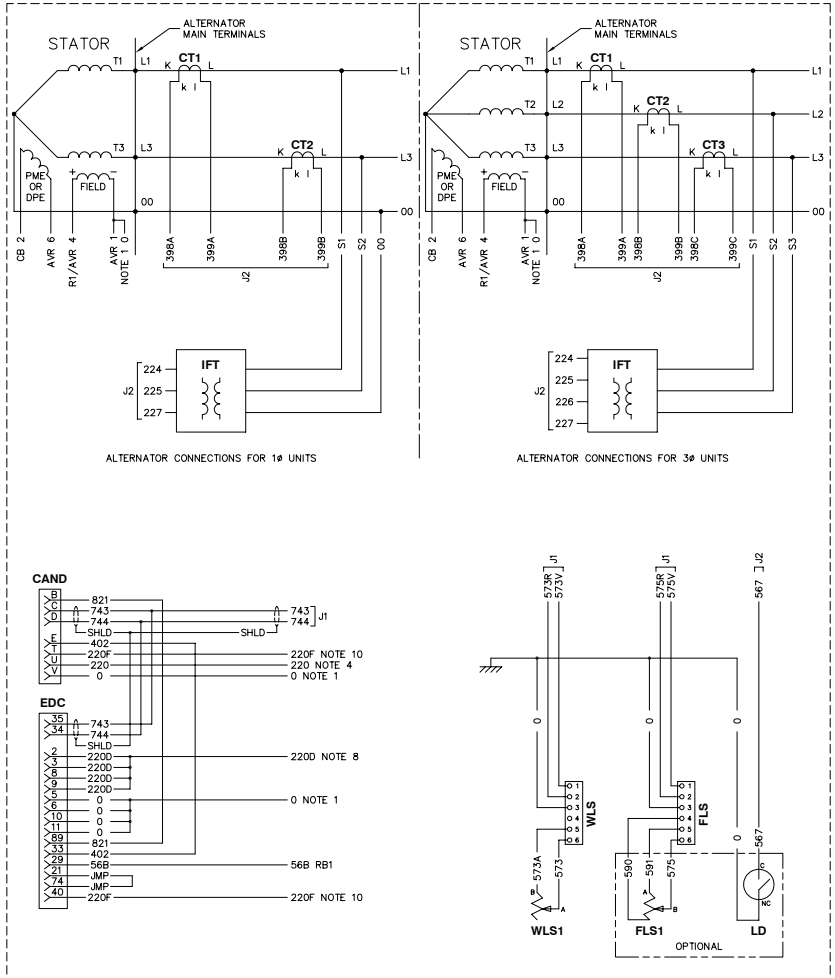

SCHEMATIC - DIAGRAM
D8.7L/D10.3L/D12.9L G17 24V
DRAWING #: 0H9868

REVISION: -A-
DATE: 7/9/10

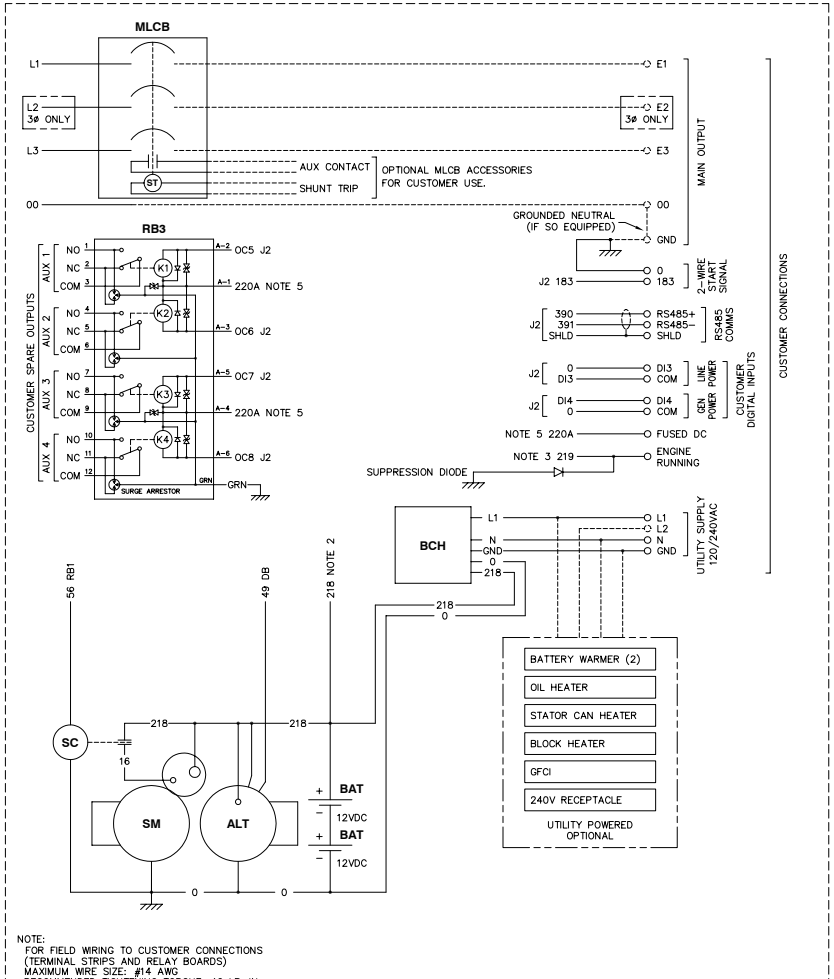

NOTE:
FOR FIELD WIRING TO CUSTOMER CONNECTIONS
(TERMINAL STRIPS AND RELAY BOARDS)
MAXIMUM WIRE SIZE: #14 AWG
RECOMMENDED TIGHTENING TORQUE: 12 LB-IN

SCHEMATIC - DIAGRAM
D8.7L/D10.3L/D12.9L G17 24V
DRAWING #: 0H9868

REVISION: -A-
DATE: 7/9/10

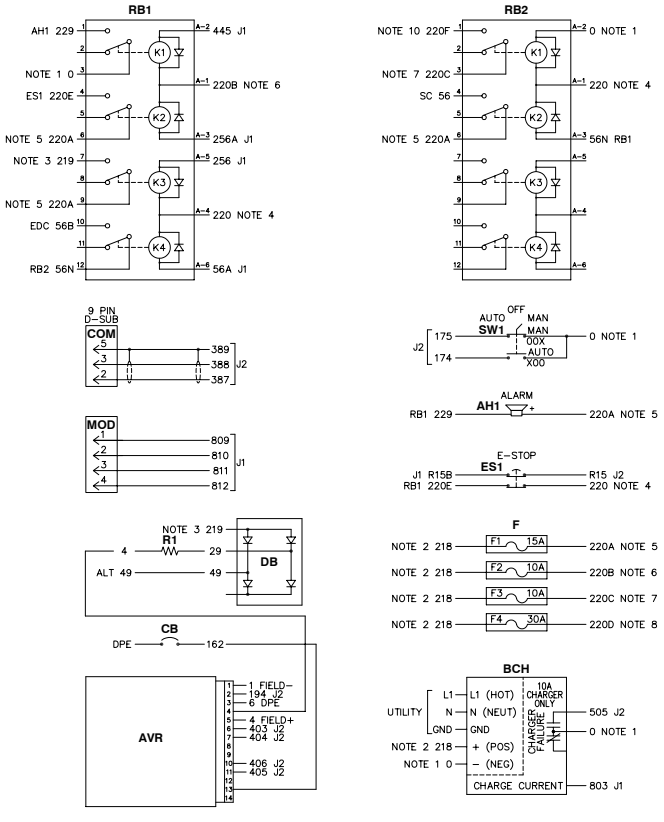

LEGEND

00 – NEUTRAL	COM – COMMUNICATION CONNECTOR	GFCI – GROUND FAULT CIRCUIT INTERRUPT
AH1 – ALARM HORN	CT_ – CURRENT TRANSFORMER	IFT – INTERFACE TRANSFORMER
ALT – DC CHARGE ALTERNATOR	DB – DIODE BRIDGE	J_ – ENGINE CONTROL MODULE CONN.
AVR – AUTO VOLTAGE REGULATOR	DPE – EXCITER	LD – LEAK DETECTOR
BAT – BATTERY	EDC – ENGINE DIGITAL CONTROL	MLCB – MAIN LINE CIRCUIT BREAKER
BCH – BATTERY CHARGER	ES1 – EMERGENCY STOP SWITCH	MOD – MODEM CONNECTOR
CAND – CAN BUS DIAGNOSTIC CONN.	F_ – FUSE	PME – PERMANENT MAGNET EXCITER
CB – CIRCUIT BREAKER	FLS_ – FUEL LEVEL SENDER	R1 – RESISTOR

RB_ – RELAY BOARD
SC – STARTER CONTACTOR
SM – STARTER MOTOR
SW1 – OFF/AUTO/MANUAL SWITCH
WLS_ – COOLANT LEVEL SENDER

SCHEMATIC - DIAGRAM
D8.7L/D10.3L/D12.9L G17 24V
DRAWING #: 0H9868

REVISION: -A-
DATE: 7/9/10

AVR CONNECTOR

PIN	WIRE	TO	FUNCTION
1	1	FIELD	– FIELD
2	194	J2–31	+12VDC
3	6	DPE	DPE OUTPUT
4	4	R1/FIELD	+ FIELD
5	4	R1/FIELD	+ FIELD
6	403	J2–8	GATE TRIGGER B
7	404	J2–20	GATE TRIGGER A
10	406	J2–30	ZERO CROSSING I/P
11	405	J2–19	GROUND (ISO)
13	162	CB	DPE OUTPUT (AFTER CB)

EDC CONNECTOR

PIN	WIRE	TO	FUNCTION
2	220D	F4	NOTE 8
3	220D	F4	NOTE 8
5	0	GND	NOTE 1
6	0	GND	NOTE 1
8	220D	F4	NOTE 8
9	220D	F4	NOTE 8
10	0	GND	NOTE 1
11	0	GND	NOTE 1
21	JMP	EDC–74	EDC JUMPER CONNECTION
29	56B	RB1–10	ENGINE START COMMAND INPUT
33	402	CAND–E	EDC TACHOMETER OUTPUT
34	744	CAND–D/J1–13	CAN BUS LOW
35	743	CAND–C/J1–2	CAN BUS HIGH
40	220F	RB2–1	NOTE 10
74	JMP	EDC–21	EDC JUMPER CONNECTION
89	821	CAND–B	ISO DIAGNOSTIC K–LINE

CAND CONNECTOR

PIN	WIRE	TO	FUNCTION
B	821	EDC–89	ISO DIAGNOSTIC K–LINE
C	743	EDC–35/J1–2	CAN BUS HIGH
D	744	EDC–34/J1–13	CAN BUS LOW
E	402	EDC–33	EDC TACHOMETER OUTPUT
T	220F	RB2–1	NOTE 10
U	220	–	NOTE 4
V	0	GND	NOTE 1

ENGINE CONTROL MODULE CONNECTIONS

J1

PIN	WIRE	TO	FUNCTION
1	SHLD	–	CAN BUS DRAIN
2	743	EDC–35/CAND–C	CAN BUS HIGH
3	810	MOD–2	MODEM SIGNAL RETURN
6	575R	FLS–2	FUEL LEVEL RTN
7	575V	FLS–1	FUEL LEVEL +
10	R15B	ES1	OVERSPEED/WATCHDOG
11	256	RB1A–5	FUEL RELAY
12	0	GND	NOTE 1
13	744	EDC–34/CAND–D	CAN BUS LOW
14	811	MOD–3	MODEM DATA CARRIER DETECT
16	803	BCH	BAT CHARGER CURRENT
22	256A	RB1A–3	ENGINE ECU POWER RELAY
23	56A	RB1A–6	STARTER RELAY
26	812	MOD–4	MODEM ENABLE
29	573R	WLS–2	COOLANT LVL RTN
30	573V	WLS–1	COOLANT LVL +
32	809	MOD–1	MODEM 12V POWER
34	445	RB1A–2	ALARM RELAY
35	220B	F2	NOTE 6

J2

	PIN	WIRE	TO	FUNCTION
	1	391	CUST CON	RS485– (XFER SW)
	2	388	COM–3	RS232 TX (GENLINK)
	3	DI3	CUST CON	SPARE IN 3/LINE PWR
	4	183	CUST CON	REMOTE START
	5	174	SW1	"AUTO" START
	6	224	IFT	V SENSE GEN A PH
	7	227	IFT	V SENSE RTN
	8	403	AVR–6	AVR GATE TRIGGER B
*	9	399C	CT3	GEN C PH CURRENT –
*	10	398C	CT3	GEN C PH CURRENT +
	11	399A	CT1	GEN A PH CURRENT –
	12	398A	CT1	GEN A PH CURRENT +
	13	390	CUST CON	RS485+ (XFER SW)
	14	387	COM–2	RS232 RX (GENLINK)
	15	567	LD	LEAK DETECTOR
	16	R15	ES1	EMERGENCY STOP
*	17	226	IFT	V SENSE GEN C PH
	19	405	AVR–11	AVR GROUND
	20	404	AVR–7	AVR GATE TRIGGER A
	21	OC8	RB3A–6	SPARE OUTPUT 4
	22	OC6	RB3A–3	SPARE OUTPUT 2
	23	OC5	RB3A–2	SPARE OUTPUT 1
	24	SHLD	CUST CON	RS485 DRAIN (XFER SW)
	25	389	COM–5	RS232 COM (GENLINK)
	26	DI4	CUST CON	SPARE IN 4/GEN PWR
	27	505	BCH	BAT CHARGER FAIL
	28	175	SW1	"MANUAL" START
	29	225	IFT	V SENSE GEN B PH
	30	406	AVR–10	AVR ZERO CROSSING I/P
	31	194	AVR–2	AVR +12VDC
	33	OC7	RB3A–5	SPARE OUTPUT 3
	34	399B	CT2	GEN B PH CURRENT–
	35	398B	CT2	GEN B PH CURRENT+

* – CONNECTIONS NOT USED IN 1ø UNITS.

NOTES:

1) WIRE# 0 IS CHASSIS GROUND (BATTERY–) UNLESS NOTED OTHERWISE.
2) WIRE# 218 IS UNFUSED +24VDC (BATTERY+).
3) WIRE# 219 IS FUSED +24VDC WHEN GENERATOR IS CRANKING OR RUNNING.
4) WIRE# 220 IS FUSED +24VDC WHEN E–STOP IS NOT ACTIVATED.
5) WIRE# 220A IS FUSED +24VDC FOR GENERAL USE.
6) WIRE# 220B IS FUSED +24VDC FOR THE GENERATOR CONTROL MODULE.
7) WIRE# 220C IS FUSED +24VDC TO SOURCE SWITCHED POWER FOR ENGINE CONTROL UNIT
8) WIRE# 220D IS FUSED +24VDC FOR ENGINE CONTROL UNIT.
9) WIRE# 220E IS FUSED +24VDC CONTROLLED BY GENERATOR CONTROL MODULE PRIOR TO E–STOP.
10) WIRE# 220F IS FUSED +24VDC CONTROLLED BY GENERATOR CONTROL MODULE TO SWITCH ENGINE CONTROL UNIT.

SCHEMATIC - DIAGRAM
D8.7L/D10.3L/D12.9L G17 24V
DRAWING #: 0H9868

REVISION: -A-
DATE: 7/9/10

H-PANEL CONTROL INTERCONNECTIONS

Notes:

1. Spare Outputs are Standard on Industrial Product Only. GenLink® Required for Programming. Contacts Rated at 5A at 30VAC/30VDC
2. TB4 Max Wire Size: #10 AWG, Recommended Tightening Torque: 14 LB-IN
3. TB1, TB2, TB9 & RB3 Max Wire Size: #14 AWG, Recommended Tightening Torque: 12 LB-IN
4. Refer to H-Panel Manual for Instructions on Enabling HTS Transfer Switch. Refer to HTS Transfer Switch Manual for Dip Switch Settings for Multiple HTS Application
5. Connect the RS-485 Overall Shield at Genset Connection Terminal Only

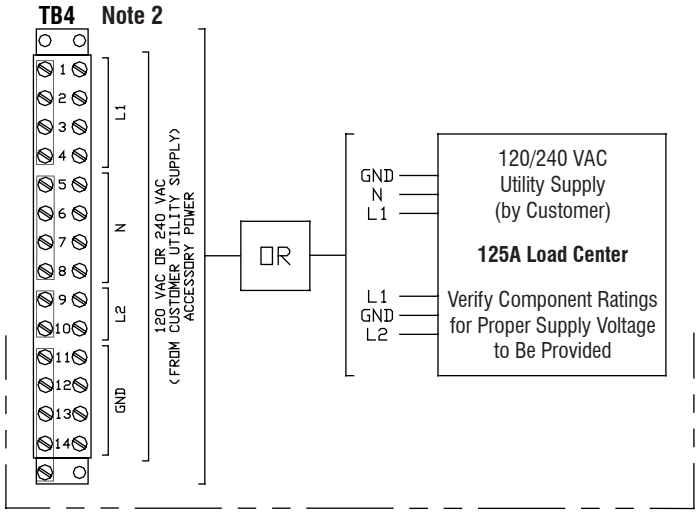

High Voltage Connection Panel

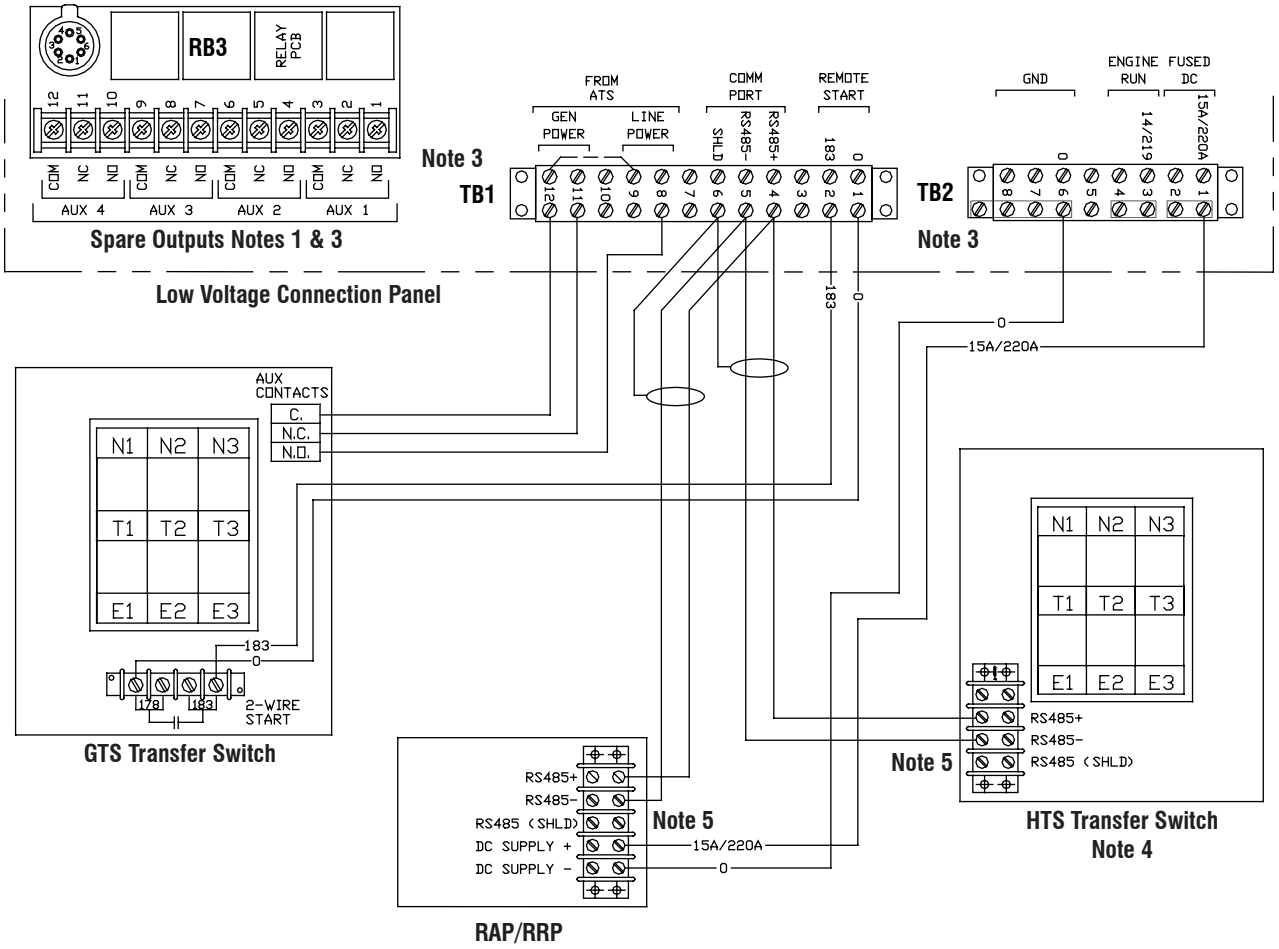

Generac Power Systems, Inc. | P.O. Box 8 | Waukesha, WI 53187
P: (262) 544-4811 © 2019 Generac Power Systems, Inc. All rights reserved. All specifications are subject to change without notice.

Part No. 0191120SSD
Rev. E 11/19/19

OPEN SET
D8.7L FPT, SD250

MICROPHONE LOCATION	60Hz NO-LOAD, dB(A) — DISTANCE: 7 METERS									
	OCTAVE BAND CENTER FREQUENCY (Hz)									
	31.5	63	125	250	500	1,000	2,000	4,000	8,000	dB(A)
FRONT	32	53	70	79	83	83	84	78	72	**89**
RIGHT	30	52	71	73	79	81	80	77	72	**86**
REAR	29	51	68	75	81	79	75	71	65	**85**
LEFT	28	52	71	77	83	85	82	79	75	**89**
AVERAGE	**30**	**52**	**70**	**76**	**81**	**82**	**80**	**76**	**71**	**87**

MICROPHONE LOCATION	60Hz FULL-LOAD, dB(A) — DISTANCE: 7 METERS									
	OCTAVE BAND CENTER FREQUENCY (Hz)									
	31.5	63	125	250	500	1,000	2,000	4,000	8,000	dB(A)
FRONT	33	55	71	81	80	82	80	76	71	**87**
RIGHT	33	57	72	75	79	84	82	79	76	**88**
REAR	33	56	71	75	81	79	76	73	70	**85**
LEFT	30	54	71	80	82	84	82	80	78	**89**
AVERAGE	**32**	**55**	**71**	**78**	**80**	**82**	**80**	**77**	**74**	**87**

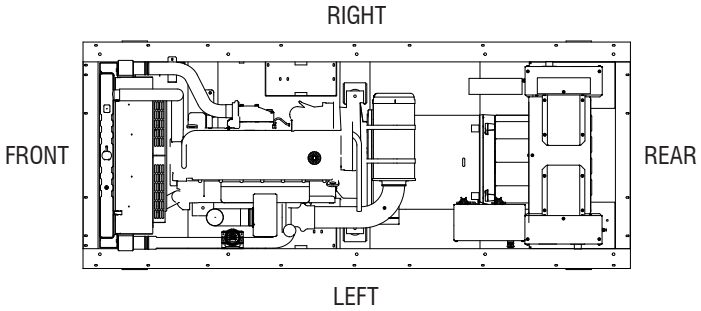

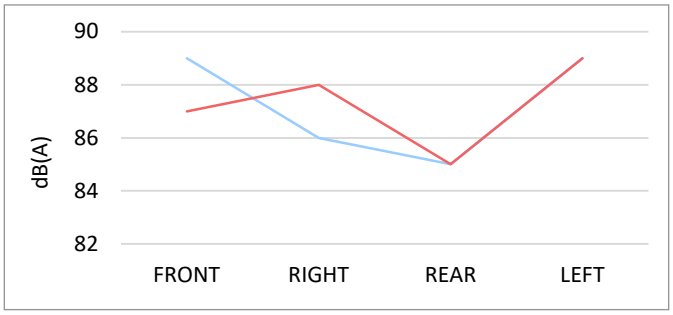

- All positions at 23 feet (7 meters) from side faces of generator set.
- Test conducted on a 100 foot diameter asphalt surface.
- Sound pressure levels are subject to instrumentation, installation and testing conditions.
- Open set sound data excludes exhaust contribution.
- Sound levels are ±2 dB(A).

Generac Power Systems, Inc. | P.O. Box 8 | Waukesha, WI 53187
P: (262) 544-4811 © 2020 Generac Power Systems, Inc. All rights reserved. All specifications are subject to change without notice.

Part No. 0185960SSD
Rev. C 7/14/20

STATEMENT OF EXHAUST EMISSIONS
2021 FPT Diesel Fueled Generator

The measured emissions values provided here are proprietary to Generac and it's authorized dealers. This information may only be disseminated upon request to regulatory governmental bodies for emissions permitting purposes or to specifying organizations as submittal data when expressly required by project specifications, and shall remain confidential and not open to public viewing. This information is not intended for compilation or sales purposes and may not be used as such, nor may it be reproduced without the expressed written permission of Generac Power Systems, Inc.. The data provided shall not be meant to include information made public by Generac.

Generator Model:	**SD250**	EPA Certificate Number:	**MFPXL08.7TR3-004**
kW_e Rating:	**250**	CARB Certificate Number:	**Not Applicable**
Engine Family:	**MFPXL08.7TR3**	SCAQMD CEP Number:	**511712**
Engine Model:	**F2CCA615*H001**	Emission Standard Category:	**Tier 3**
Rated Engine Power (BHP)*:	**389**	Certification Type:	**Stationary Emergency CI (40 CFR Part 60 Subpart IIII)**
Fuel Consumption (gal/hr)*:	**19.1**		
Aspiration:	**Turbocharged/Aftercooled**		
Rated RPM:	**1,800**		

*Engine power and fuel consumption are declared by the engine manufacturer of record and the U.S EPA.

EMISSIONS BASED ON ENGINE POWER OF SPECIFIC ENGINE MODEL

These Values Are Actual Composite Weighted Exhaust Emissions Results Over the EPA 5-Mode Test Cycle

CO	NOx + NMHC	PM	
0.5	**3.36**	**0.07**	Grams/kW-hr
0.37	**2.51**	**0.05**	Grams/bhp-hr

- The stated values are actual exhaust emission test measurements obtained from an engine representative of the type described above.
- Values based on 5-Mode testing are official data of record as submitted to regulatory agencies for certification purposes. Testing was conducted in accordance with prevailing EPA protocol, which is typically accepted by SCAQMD and other regional authorities.
- No emissions values provided above are to be construed as guarantees of emission levels for any given Generac generator unit.
- Generac Power Systems, Inc. reserves the right to revise this information without prior notice.
- Consult state and local regulatory agencies for specific permitting requirements.
- The emission performance data supplied by the equipment manufacturer is only one element required toward completion of the permitting and installation process. State and local regulations may vary on a case-by-case basis and local agencies must be consulted by the permit application/equipment owner prior to equipment purchase or installation. The data supplied herein by Generac Power Systems Inc. cannot be construed as a guarantee of installability of the generating set.

Generac Power Systems, Inc. | P.O. Box 8 | Waukesha, WI 53187
P: (262) 544-4811 © 2021 Generac Power Systems, Inc. All rights reserved. All specifications are subject to change without notice.

Part No. A0001316715
Rev. A 1/13/21

	UNITED STATES ENVIRONMENTAL PROTECTION AGENCY **2021 MODEL YEAR** **CERTIFICATE OF CONFORMITY** **WITH THE CLEAN AIR ACT**	**OFFICE OF TRANSPORTATION** **AND AIR QUALITY** **ANN ARBOR, MICHIGAN 48105**

Certificate Issued To: FPT Industrial S.p.A. (U.S. Manufacturer or Importer) **Certificate Number: MFPXL08.7TR3-004**	**Effective Date:** **05/26/2020** **Expiration Date:** **12/31/2021**	**Byron J. Bunker, Division Director** **Compliance Division**	**Issue Date:** **05/26/2020** **Revision Date:** **N/A**

Model Year: 2021 **Manufacturer Type:** Original Engine Manufacturer **Engine Family:** MFPXL08.7TR3	**Mobile/Stationary Indicator:** Stationary **Emissions Power Category:** 225<=kW<450 **Fuel Type:** Diesel **After Treatment Devices:** No After Treatment Devices Installed **Non-after Treatment Devices:** No Non-After Treatment Devices Installed

Pursuant to Section 111 and Section 213 of the Clean Air Act (42 U.S.C. sections 7411 and 7547) and 40 CFR Part 60, and subject to the terms and conditions prescribed in those provisions, this certificate of conformity is hereby issued with respect to the test engines which have been found to conform to applicable requirements and which represent the following engines, by engine family, more fully described in the documentation required by 40 CFR Part 60 and produced in the stated model year.

This certificate of conformity covers only those new compression-ignition engines which conform in all material respects to the design specifications that applied to those engines described in the documentation required by 40 CFR Part 60 and which are produced during the model year stated on this certificate of the said manufacturer, as defined in 40 CFR Part 60.

It is a term of this certificate that the manufacturer shall consent to all inspections described in 40 CFR 1068 and authorized in a warrant or court order. Failure to comply with the requirements of such a warrant or court order may lead to revocation or suspension of this certificate for reasons specified in 40 CFR Part 60. It is also a term of this certificate that this certificate may be revoked or suspended or rendered void *ab initio* for other reasons specified in 40 CFR Part 60.

This certificate does not cover engines sold, offered for sale, or introduced, or delivered for introduction, into commerce in the U.S. prior to the effective date of the certificate.

Certification of Quality

Generac Power Systems certifies that the products we manufacture have been built and tested in accordance with strict internal and external standards for quality. Our quality management system has been registered with the internationally recognized ISO 9001:2008 standard and our products comply with external standards that include, but are not limited to, CSA, NEMA, EGSA, ISO, and UL.

The Generac Quality Management System (GQMS) ensures the highest standards of quality at every level of production, from raw materials to the finished product. This includes receiving inspection, in-process checks, product and process audits, testing, final inspections, and shipping standards.

Tests of our products are performed in accordance with our internal procedures and controlled through the GQMS to ensure accuracy and effectiveness. The testing process and product designs comply with external standards which may include, but are not limited to: ISO 8528-5, ISO 3046, NFPA 99, NFPA 110, BS 5514, SAE J1349, and DIN 6271.

Generac Power Systems has over one million square feet of manufacturing space and over 2000 employees dedicated to designing and manufacturing power generation equipment in our multiple State of Wisconsin, USA factories. All of our installed and mobile generators are built with pride by our skilled American workforce to ensure our customers receive the quality that they expect from Generac.

We are committed to producing quality products for both our internal and external customers. We will continuously improve our processes and diligently measure all aspects of our business.

Daniel Waschow

Vice President of Quality
Generac Power Systems, Inc.
Waukesha, Wisconsin USA

 © 2015 Generac Power Systems, Inc. All rights reserved. All specifications are subject to change without notice.

Generac Power Systems 2 Year (2B) Limited Warranty for Industrial Standby Generators

For the period of warranty noted below, which begins upon the successful start-up and/or on-line activation of the unit, Generac Power Systems, Inc. “Generac” warrants that its Generator will be free from defects in material and workmanship for the items and period set forth below. Generac will, at its discretion, repair or replace any part(s) which, upon evaluation, inspection and testing by Generac or an Independent Authorized Service Dealer, is found to be defective. Any equipment that the purchaser/owner claims to be defective must be evaluated by the nearest Independent Authorized Service Dealer. Emissions components are excluded from coverage under this extended warranty. Emissions warranty coverage is detailed in a separate emissions warranty.

Warranty Coverage: Warranty coverage period is for Two (2) years or two-thousand (2,000) hours, whichever occurs first.

Warranty Coverage in Year(s): 1	Warranty Coverage in Year(s): 2
Parts, Labor and Limited Travel	Limited Parts Only

Limited Gearbox Coverage:

Year(s): 1-5 Coverage	Year(s): 6-10 Coverage
Limited Parts and Labor	Limited Parts Only

Guidelines:

1. Unit must be registered and proof of purchase available.
2. Any and all warranty repairs and/or concerns must be performed and/or addressed by an Independent Authorized Service Dealer, or branch thereof. Repairs or diagnostics performed by individuals other than Independent Authorized Service Dealers not authorized in writing by Generac will not be covered.
3. This Warranty is transferable between ownership of original install site.
4. Generac supplied engine coolant heaters (block-heaters), heater controls and circulating pumps are only covered during the first year of the warranty provision.
5. Generac may choose to repair, replace or refund a piece of equipment in its sole discretion.
6. Enclosures are warranted against rust for the first year of ownership only. Damage caused after receipt of generator is the responsibility of the owner and is not covered by this warranty. Nicks, scrapes, dents or scratches to the painted enclosure should be repaired promptly by the owner.
7. Warranty only applies to permanently wired and mounted units.
8. Damage to any covered components or consequential damages caused by the use of a non-OEM part will not be covered by the warranty.
9. Proof of performance of all required maintenance must be available.
10. Travel allowance is limited to 300 miles maximum and seven and one half (7.5) hours maximum (per occurrence, whichever is less) round trip from the nearest Independent Authorized Service Dealer. Any additional travel required will not be covered.
11. Engines, driven components and fuel tanks used in Generac’s standby power products system can carry a separate manufacturer’s (OEM) warranty (the “OEM Warranties”), unless otherwise expressly stated. OEM Warranties are in addition to this Warranty. All warranty claims for defects in material and/or workmanship on Generac product OEM components, may be directed through the OEM distributor/dealer network. OEM Warranties may vary and are subject to change. Generac shall have no liability under OEM warranties.

The following will NOT be covered by this warranty:

1. Costs of normal maintenance (i.e. tune-ups, associated part(s), adjustments, loose/leaking clamps, installation and start-up).
2. Damage/failures to the generator and/or transfer switch system caused by accidents, shipping, handling, or improper storage.
3. Damage/failures caused by operation with improper fuels, speeds, loads or installations other than what’s recommended or specified by Generac Power Systems.
4. Damage to the generator and/or transfer switch due to the use of non-Generac parts and/or equipment, contaminated fuels, oils, coolants/antifreeze or lack of proper fuels, oil or coolants/antifreeze.
5. Failures due to normal wear and tear, accident, misuse, abuse, neglect, improper installation, improper sizing, or rodent, reptile, and/or insect infestation.
6. Rental equipment used while warranty repairs are being performed and/or any extraordinary equipment used for removal and/or reinstallation of generator (i.e. cranes, hoists, lifts, et. al.).
7. Planes, ferries, railroad, buses, helicopters, snowmobiles, snow-cats, off-road vehicles or any other mode of transport deemed not standard by Generac.
8. Products that are modified or altered in a manner not authorized by Generac in writing.
9. Starting batteries, fuses, light bulbs, engine fluids and any related labor.
10. Steel enclosures that rust as a result of improper installation, location in a harsh or salt water environment, or are scratched where the integrity of applied paint is compromised.
11. Units sold, rated or used for "Prime Power", "Trailer Mounted" or "Rental Unit" applications as defined by Generac. Contact an Independent Authorized Service Dealer for definitions.
12. Shipping costs associated with expedited shipping.
13. Additional costs for overtime, holiday or emergency labor costs for repairs outside of normal business hours.
14. Any incidental, consequential or indirect damages caused by defects in materials or workmanship, or any delay in repair or replacement of the defective part(s).
15. Failures caused by any act of God or external cause including without limitation, fire, theft, freezing, war, lightning, earthquake, windstorm, hail, water, tornado, hurricane, or any other matters which are reasonably beyond the manufacturer’s control.

THIS WARRANTY SUPERSEDES ALL OTHER WARRANTIES, EXPRESSED OR IMPLIED. SPECIFICALLY, GENERAC MAKES NO OTHER WARRANTIES AS TO THE MERCHANTABILITY OR FITNESS FOR A PARTICULAR PURPOSE. ANY IMPLIED WARRANTIES WHICH ARE ALLOWED BY LAW, SHALL BE LIMITED IN DURATION TO THE TERMS OF THE EXPRESS WARRANTY PROVIDED HEREIN. SOME JURISDICTIONS DO NOT ALLOW LIMITATIONS ON HOW LONG AN IMPLIED WARRANTY LASTS, SO THE ABOVE LIMITATION MAY NOT APPLY TO YOU. GENERAC'S ONLY LIABILITY SHALL BE THE REPAIR OR REPLACEMENT OF PART(S) AS STATED ABOVE. IN NO EVENT SHALL GENERAC BE LIABLE FOR ANY INCIDENTAL OR CONSEQUENTIAL DAMAGES, EVEN IF SUCH DAMAGES ARE A DIRECT RESULT OF GENERAC’S NEGLIGENCE. SOME JURISDICTIONS DO NOT ALLOW THE EXCLUSION OR LIMITATION OF INCIDENTAL OR CONSEQUENTIAL DAMAGES, SO THE ABOVE LIMITATION MAY NOT APPLY TO YOU. THIS WARRANTY GIVES YOU SPECIFIC LEGAL RIGHTS. YOU ALSO HAVE OTHER RIGHTS UNDER APPLICABLE LAW.

FOR AUSTRALIA ONLY: Our goods come with guarantees that cannot be excluded under the Australian Consumer Law. You are entitled to a replacement or refund for a major failure and for compensation for any other reasonably foreseeable loss or damage. You are also entitled to have the goods repaired or replaced if the goods fail to be of acceptable quality and the failure does not amount to a major failure.
FOR NEW ZEALAND ONLY: Nothing in this warranty statement excludes, restricts or modifies any condition, warranty right or remedy which pursuant to the New Zealand Legislation (Commonwealth or State) including the Fair Trading Practices Act of 1986 or the Consumer Guarantees Act 1993 (“CGA”) applies to this limited warranty and may not be so excluded, restricted or modified. Nothing in this statement is intended to have the effect of contracting out of the provisions of the CGA, except to the extent permitted by that Act, and these terms are to be modified to the extent necessary to give effect to that intention. If you acquire goods from Generac Power Systems or any of its authorized resellers and distributors for the purposes of a business, then pursuant to section 43(2) of the CGA, it is agreed that the provisions of the CGA do not apply.

GENERAC POWER SYSTEMS, INC. • P.O. BOX 8 • Waukesha, WI, USA 53187
Ph: (888) GENERAC (436-3722) • Fax: (262) 544-4851

To locate the nearest Independent Authorized Service Dealer and to download schematics, exploded views and parts lists
visit our website: www.generac.com

Part No. 0K3486 Revision E (2/16)

Garantía limitada de 2 años (2B) de Generac Power Systems para los generadores de respaldo industriales

Durante el período de garantía indicado abajo, que comienza desde la puesta en marcha y/o activación exitosa en línea de la unidad, Generac Power Systems, Inc. "Generac" garantiza que generador estará libre de defectos de material y/o mano de obra para los ítems y el período indicados a continuación. Generac, a su discreción, reparará o sustituirá cualquier pieza o piezas que, por medio de la evaluación, inspección y prueba efectuada por Generac o un Concesionario de servicio autorizado independiente de Generac, se determine que es o son defectuosa(s). Todo equipo que el comprador o propietario reclame como defectuoso debe ser evaluado por el Concesionario de servicio autorizado independiente de Generac más cercano. Los componentes relacionados con emisiones están excluidos de la cobertura bajo esta garantía extendida. La cobertura de la garantía de emisiones se detalla por separado en una garantía de emisiones.

Cobertura de la garantía: El período de cobertura de la garantía es de dos (2) años o dos mil (2000) horas, lo que ocurra primero.

Cobertura de la garantía en el o los año(s): 1	Cobertura de la garantía en el o los año(s): 2
Sobre piezas, mano de obra y gastos de viaje limitados	Limitada solo sobre piezas

Cobertura limitada sobre la caja de engranajes:

Año(s) de cobertura: 1-5 Cobertura	Año(s) de cobertura: 6-10 Cobertura
Limitada sobre piezas y mano de obra	Limitada solo sobre piezas

Directrices:

1. La unidad debe estar registrada y tener prueba de compra disponible.
2. Cualquiera y todas las reparaciones y/o preocupaciones por garantía deben ser efectuadas y/o dirigidas por un Concesionario de servicio autorizado independiente de Generac, o una sucursal de este. No serán cubiertas las reparaciones o los diagnósticos efectuados por personas diferentes de los Concesionarios de servicio autorizados independientes de Generac no autorizados por escrito por Generac.
3. Esta garantía es transferible entre propietarios del sitio de instalación original.
4. Los calentadores de refrigerante de motor (calentadores de bloque), los controles del calentador y las bombas de circulación suministrados por Generac solo están cubiertos durante el primer año de prestación de la garantía.
5. Generac puede elegir reparar, sustituir o reembolsar una pieza del equipo a su exclusiva discreción.
6. Los gabinetes están garantizados contra corrosión solamente durante el primer año de propiedad. El daño causado después de la recepción del generador es responsabilidad del comprador y no está cubierto por esta garantía. Las muescas, raspaduras, abolladuras o rayaduras de gabinete pintado deben ser reparadas sin demora por el propietario.
7. La garantía corresponde solamente a las unidades conectadas y montadas en forma permanente.
8. Los daños a cualquier componente o los daños emergentes causados por el uso de una pieza que no sea OEM no estarán cubiertos por la garantía.
9. Debe haber disponible prueba de la ejecución de todo el mantenimiento requerido.
10. Las asignaciones para viaje están limitadas a 300 millas como máximo y siete horas y media (7.5) horas como máximo (por ocurrencia, lo que sea menor), viaje de ida y vuelta, desde el Concesionario de servicio autorizado independiente de Generac más cercano. Todo gasto de viaje adicional requerido no será cubierto.
11. Los motores, los componentes accionados y los tanques de combustible usados en los productos de respaldo de Generac pueden llevar una garantía de fabricante (OEM) separada (las "Garantías de OEM"), a menos que se estipule expresamente lo contrario. Las garantías de OEM son un agregado a esta garantía. Todos los reclamos de garantía por defectos de material y/o mano de obra en los componentes OEM del producto Generac, pueden ser dirigidos a través de la red de distribuidores/concesionarios OEM. Las garantías de OEM pueden variar y están sujetas a cambios. Generac no tendrá responsabilidad bajo las garantías de OEM.

Lo siguiente NO será cubierto por esta garantía:

1. Costes del mantenimiento normal (es decir: afinaciones, pieza[s] relacionada[s], ajustes, abrazaderas sueltas o con fugas, instalación y puesta en marcha).
2. Daños/fallos del sistema de generador y/o interruptor de transferencia causados por accidentes, envío, manipulación, o almacenamiento incorrecto.
3. Los daños/fallos causados por la operación con combustibles, velocidades, cargas, o instalaciones incorrectas diferentes de las recomendadas o especificadas por Generac Power Systems.
4. Los daños al generador y/o el interruptor de transferencia debidos al uso de piezas y/o equipos que no sean de Generac; combustibles, aceites, refrigerantes/anticongelantes contaminados; o falta de combustibles, aceites, refrigerantes/anticongelantes apropiados.
5. Fallos debidos a: desgaste y daño normal, accidente, uso indebido, abuso, negligencia, instalación incorrecta, dimensionamiento incorrecto, o plagas de roedores y/o insectos.
6. Equipos arrendados usados mientras se llevan a cabo reparaciones de garantía y/o todos los equipos extraordinarios usados para retirar y/o reinstalar el generador, (esto es: grúas, malacates, elevadores, etc.).
7. Aeronaves, transbordadores, ferrocarril, autobuses, helicópteros, motocicletas para nieve, camiones para nieve, vehículos fuera de ruta o cualquier otro modo de transporte no considerado estándar por Generac.
8. Productos que se modifiquen o alteren en forma no autorizada por Generac por escrito.
9. Baterías de arranque, fusibles, bombillas de luz, fluidos para el motor y mano de obra relacionada.
10. Los gabinetes de acero que se corroen debido a instalación incorrecta, ubicación en un entorno agresivo o con agua salada, o se rayen donde esté comprometida la integridad de la pintura aplicada.
11. Las unidades vendidas, calificadas para, o usadas en aplicaciones de "Alimentación eléctrica principal", "Montada en remolque" o "Unidad en alquiler" como las define Generac. Comuníquese con un Concesionario de servicio autorizado independiente para las definiciones.
12. Costes de envío asociados con envío urgente.
13. Costes adicionales por horas extra y feriados o los costes de mano de obra de emergencia por reparaciones fuera del horario de trabajo normal.
14. Todos los daños accesorios, emergentes o indirectos causados por defectos en los materiales o mano de obra o toda demora en la reparación o sustitución de la(s) pieza(s) defectuosa(s).
15. Los fallos causados por cualquier acto de fuerza mayor o causa externa, que incluyen, sin limitaciones, incendio, robo, congelamiento, guerra, rayos, terremoto, tormenta de viento, granizo, agua, tornado, huracán, o cualesquiera otros asuntos que estén fuera del control razonable del fabricante.

ESTA GARANTÍA SUSTITUYE CUALQUIER OTRA GARANTÍA, EXPRESA O IMPLÍCITA. ESPECÍFICAMENTE, GENERAC NO EXTIENDE NINGUNA OTRA GARANTÍA ACERCA DE LA COMERCIALIZACIÓN O APTITUD PARA UN PROPÓSITO EN PARTICULAR. LA DURACIÓN DE TODAS LAS GARANTÍAS IMPLÍCITAS PERMITIDAS POR LA LEY ESTARÁ LIMITADA A LAS CONDICIONES DE LA GARANTÍA EXPRESA ESTIPULADA EN LA PRESENTE. ALGUNAS JURISDICCIONES NO PERMITEN LIMITACIONES DE LA DURACIÓN DE UNA GARANTÍA IMPLÍCITA; POR LO TANTO, LA LIMITACIÓN PRECEDENTE PUEDE NO APLICARSE A USTED. LA ÚNICA RESPONSABILIDAD DE GENERAC SERÁ REPARAR O SUSTITUIR LA(S) PIEZA(S) COMO SE ESTIPULÓ PRECEDENTEMENTE. GENERAC NO SERÁ RESPONSABLE EN NINGÚN CASO POR NINGÚN DAÑO ACCESORIO O EMERGENTE, AUN CUANDO TAL DAÑO SEA RESULTADO DIRECTO DE LA NEGLIGENCIA DE GENERAC. ALGUNAS JURISDICCIONES NO PERMITEN LA EXCLUSIÓN O LIMITACIÓN DE DAÑOS ACCESORIOS O EMERGENTES, DE MANERA QUE LA LIMITACIÓN PRECEDENTE PUEDE NO APLICARSE A USTED. ESTA GARANTÍA LE OTORGA DERECHOS LEGALES ESPECÍFICOS. TAMBIÉN TIENE OTROS DERECHOS BAJO LA LEY CORRESPONDIENTE.

SOLO PARA AUSTRALIA: Nuestros productos se entregan con garantías que no pueden ser excluidas según la Australian Consumer Law (Ley australiana de consumidores). Usted tiene derecho a sustitución o reembolso por un fallo mayor y a compensación por cualquier otra pérdida o daño razonable previsible. Usted también tiene derecho a que los bienes sean reparados o sustituidos si los bienes no son de calidad aceptable y la falla no llega a ser un fallo mayor.
SOLO PARA NUEVA ZELANDA: Nada de esta declaración de garantía excluye, restringe o modifica ninguna condición, derecho de garantía o solución que, conforme a la legislación de Nueva Zelanda (Comunidad o Estado), incluso la Fair Trading Practices Act (Ley de transacciones comerciales justas) de 1986 o la Consumer Guarantees Act (Ley de garantías de los consumidores, "CGA") de 1993, se aplique a esta garantía limitada y por lo tanto no puede ser sometida a exclusiones, restricciones o modificaciones. Nada de esta declaración tiene el propósito de tener efecto de contratar fuera de las previsiones de la CGA, excepto con el alcance permitido por la ley y estos términos se deben modificar con el alcance necesario para hacer efectiva esta intención. Si adquiere bienes de Generac Power Systems o alguno de sus revendedores y distribuidores autorizados con propósitos comerciales, entonces, conforme a la sección 43(2) de la CGA, se acuerda que no se aplican las previsiones de la CGA.

GENERAC POWER SYSTEMS, INC. • P.O. BOX 8 • Waukesha, WI 53187, EE. UU.
Tel.: (888) GENERAC (436-3722) • Fax: (262) 544-4851

Para ubicar el Concesionario de servicio autorizado independiente más cercano y descargar diagramas esquemáticos, despieces y listas de piezas
visite nuestro sitio Web: www.generac.com

Núm. de pieza 0K3486 Revisión E (02/16)

Garantie limitée de 2 ans (2B) de Generac Power Systems sur les générateurs de secours industriels

Pendant la période de garantie mentionnée ci-bas, qui débute dès le démarrage réussi de l'appareil ou l'activation en ligne de l'appareil, Generac Power Systems, Inc. (Generac) garantit que son générateur sera exempt de vices de matériaux et fabrication en ce qui concerne les éléments et la période indiqués ci-dessous. À sa seule discrétion, Generac réparera ou remplacera toute pièce qui est jugée défectueuse après l'évaluation, l'inspection et la mise à l'essai par Generac ou un fournisseur de services d'entretien agréé indépendant. Tout équipement que l'acheteur/propriétaire prétend être défectueux doit être évalué par le fournisseur de services d'entretien agréé indépendant le plus près. Les composantes relatives aux émissions ne sont pas couvertes en vertu de la présente garantie. La couverture des composantes relatives aux émissions est détaillée dans une garantie distincte.

Couverture de la garantie : La période de garantie est de deux (2) ans ou de deux mille (2000) heures, selon la première éventualité.

Période de garantie : 1	Période de garantie : 2
Pièces, main-d'œuvre et couverture limitée des déplacements	Couverture limitée – pièces seulement

Couverture limitée de la boîte à engrenages :

Période : couverture de 1 à 5 ans	Période : couverture de 6 à 10 ans
Couverture limitée – pièces et main-d'œuvre	Couverture limitée – pièces seulement

Lignes directrices :

1. L'appareil doit être enregistré et la preuve d'achat doit être présentée sur demande.
2. Toute réparation sous garantie doit être effectuée par un fournisseur de services d'entretien agréé indépendant ou l'une de ses succursales, et toute préoccupation doit être également traitée par un fournisseur de services d'entretien agréé indépendant de Generac ou l'une de ses succursales. Toute réparation ou évaluation effectuée par des personnes autres que des fournisseurs de services d'entretien agréés indépendants qui n'a pas été autorisée par écrit par Generac ne sera pas couverte.
3. La présente garantie est transférable conjointement à la propriété du site d'installation d'origine.
4. Les chaufferettes à liquide de refroidissement du moteur (chauffe-moteur), les commandes de chauffage et les pompes de circulation fournies par Generac ne sont couvertes que pendant la première année de la période de garantie.
5. Generac peut choisir, à sa seule discrétion, de réparer, de remplacer ou de rembourser une pièce d'équipement.
6. Les boîtiers sont garantis contre la rouille pendant la première année de possession seulement. Les dommages causés après la réception du générateur sont la responsabilité du propriétaire et ne sont pas couverts par la présente garantie. Les entailles, éraflures, bosses ou égratignures au boîtier peint doivent être réparées sans délai par le propriétaire.
7. La garantie s'applique uniquement aux appareils montés et câblés en permanence.
8. Aucun dommage ou dommage indirect à toute pièce couverte découlant de l'utilisation de pièces non fabriquées par un fabricant d'équipement d'origine ne sera couvert par la garantie.
9. Une preuve d'exécution de tous les travaux d'entretien requis doit être présentée sur demande.
10. La présente garantie couvre les déplacements aller-retour d'un maximum de 480 km (300 miles) et de sept heures et demie (7,5) (par déplacement, selon le moindre des deux) à partir du fournisseur de services d'entretien agréé indépendant le plus près. Tout déplacement supplémentaire requis ne sera pas couvert.
11. Les moteurs, les pièces d'entraînement et les réservoirs de carburant utilisés dans les systèmes d'alimentation de secours de Generac peuvent être protégés au titre de la garantie d'un fabricant d'équipement distinct (les « garanties des fabricants d'équipement d'origine »), sauf indication expresse à l'effet contraire. Les garanties des fabricants d'équipement d'origine s'ajoutent à la présente garantie. Toute réclamation au titre de la garantie pour vices de matériaux ou de fabrication de pièces d'un fabricant d'équipement d'origine sur un produit Generac peut être faite auprès du distributeur ou du réseau de fournisseurs de ce fabricant d'équipement d'origine. Les garanties des fabricants d'équipement d'origine peuvent varier et faire l'objet de modifications. Generac n'a aucune responsabilité découlant des garanties offertes par les fabricants d'équipement d'origine.

Les éléments suivants ne seront PAS couverts par la présente garantie :

1. Les coûts d'entretien normal (c'est-à-dire mises au point, réglages de pièces associées, ajustements, resserrage de fixations, installation et démarrage).
2. Les dommages ou défaillances du générateur et/ou du commutateur de transfert causés par un accident, le transport, la manutention ou un entreposage inadéquat.
3. Les dommages/défaillances causés par l'utilisation de carburants inappropriés ou l'utilisation à des vitesses, avec des charges ou selon une installation autres que ce qui est recommandé ou spécifié par Generac Power Systems.
4. Les dommages au générateur et/ou au commutateur de transfert causés par l'utilisation de pièces ou d'équipement non fabriqués par Generac, de carburant, d'huile, de liquide de refroidissement et d'antigel contaminé ou encore du manque de carburant, d'huile, de liquide de refroidissement et d'antigel.
5. Les défaillances causées par l'usure normale, un accident, une utilisation inappropriée, une utilisation abusive, une négligence, une installation inadéquate, un dimensionnement inadéquat ou une infestation de rongeurs, de reptiles ou d'insectes.
6. L'équipement de location utilisé pendant que des réparations sous garantie sont effectuées et/ou tout équipement extraordinaire utilisé pour retirer ou réinstaller le générateur (c'est-à-dire grues, appareils de levage, élévateurs, etc.).
7. Les avions, les traversiers, les trains, les autobus, les hélicoptères, les motoneiges, les dameuses, les véhicules hors route ou tout autre moyen de transport jugé non standard par Generac.
8. Les produits modifiés ou altérés d'une manière qui n'a pas été autorisée par écrit par Generac.
9. Les batteries de démarrage, les fusibles, les ampoules électriques, les fluides de moteur et toute main-d'œuvre connexe.
10. Les boîtiers en acier qui rouillent en raison d'une installation inadéquate, d'une installation dans un environnement difficile ou salin ou d'égratignures qui compromettent l'intégrité de la peinture appliquée sur le boîtier.
11. Les appareils vendus, cotés ou utilisés selon les applications suivantes, telles qu'elles sont définies par Generac : « puissance électrique de base », « monté sur remorque » ou « unité de location ». Veuillez communiquer avec un fournisseur de services d'entretien agréé indépendant pour obtenir les définitions.
12. Les coûts d'expédition liés à l'expédition accélérée.
13. Les coûts supplémentaires liés aux heures supplémentaires, aux jours fériés ou aux services d'urgence pour toute réparation effectuée en dehors des heures normales de bureau.
14. Tout dommage accessoire, subséquent ou indirect causé par un défaut de matériau et de fabrication ou par tout retard dans la réparation ou le remplacement de pièces défectueuses.
15. Les défaillances causées par un cas de force majeure ou une cause externe y compris, sans toutefois s'y limiter, le feu, le vol, le gel, la guerre, la foudre, un tremblement de terre, une tempête, la grêle, la pluie, une tornade, un ouragan ou toute autre situation raisonnablement hors du contrôle du fabricant.

LA PRÉSENTE GARANTIE REMPLACE TOUTES LES AUTRES GARANTIES, EXPLICITES OU IMPLICITES. EN PARTICULIER, GENERAC N'OFFRE AUCUNE AUTRE GARANTIE QUANT À LA QUALITÉ MARCHANDE OU À LA CONVENANCE À UN USAGE PARTICULIER. TOUTE GARANTIE IMPLICITE AUTORISÉE PAR LA LOI SERA LIMITÉE À LA DURÉE DE LA PÉRIODE DE LA PRÉSENTE GARANTIE EXPLICITE. CERTAINS ÉTATS OU PROVINCES NE PERMETTENT PAS LES LIMITATIONS SUR LA DURÉE D'UNE GARANTIE IMPLICITE ET, PAR CONSÉQUENT, LA PRÉSENTE LIMITATION PEUT NE PAS S'APPLIQUER. LA RESPONSABILITÉ DE GENERAC SE LIMITERA À LA RÉPARATION OU AU REMPLACEMENT DES PIÈCES, COMME INDIQUÉ PRÉCÉDEMMENT. EN AUCUN CAS GENERAC NE POURRA ÊTRE TENUE RESPONSABLE DE DOMMAGES ACCESSOIRES OU SUBSÉQUENTS, MÊME SI LES DOMMAGES RÉSULTENT DIRECTEMENT DE LA NÉGLIGENCE DE GENERAC. CERTAINS ÉTATS OU PROVINCES N'AUTORISENT PAS L'EXCLUSION NI LA LIMITATION DES DOMMAGES ACCESSOIRES OU INDIRECTS ET, PAR CONSÉQUENT, LA LIMITATION ÉNONCÉE CI-DESSUS PEUT NE PAS S'APPLIQUER. CETTE GARANTIE VOUS CONFÈRE DES DROITS LÉGAUX PRÉCIS. VOUS POUVEZ ÉGALEMENT JOUIR D'AUTRES DROITS EN VERTU DES LOIS APPLICABLES.

POUR L'AUSTRALIE UNIQUEMENT : Nos produits sont fournis avec des garanties qui ne peuvent être exclues en vertu de la loi australienne sur la consommation (Australian Consumer Law). Vous avez droit à un remplacement ou à un remboursement pour une défaillance majeure et à une indemnisation pour toute autre perte ou tout dommage raisonnablement prévisible. Vous disposez également d'un droit à la réparation ou au remplacement si les produits ne sont pas d'une qualité acceptable et si cette défaillance n'est pas considérée comme majeure.
POUR LA NOUVELLE-ZÉLANDE UNIQUEMENT : Cette garantie n'exclut, ne restreint ni ne modifie aucune condition, aucun droit de garantie ou recours qui, conformément à la législation de Nouvelle-Zélande (Commonwealth ou État), y compris la loi sur la pratique commerciale loyale de 1986 (Fair Trading Practices Act) ou la loi sur la protection du consommateur de 1993 (CGA ou Consumer Guarantees Act), s'applique à cette garantie limitée et ne peut pas être exclue, restreinte ou modifiée. Cette garantie ne vise en aucun cas à contourner les dispositions de la CGA, sauf dans la mesure permise par cette loi, et ces termes doivent être modifiés dans la mesure nécessaire pour donner effet à cette intention. Si vous faites l'acquisition d'un produit de Generac Power Systems ou d'un de ses distributeurs et revendeurs autorisés à des fins commerciales, alors, conformément à l'article 43(2) de la CGA, il est convenu que les dispositions de la CGA ne s'appliquent pas.

GENERAC POWER SYSTEMS, INC. • C.P. 8 • Waukesha, WI (É.-U.) 53187
Téléphone : (888) GENERAC (436-3722) • Télécopieur : (262) 544-4851

Pour trouver le fournisseur de services d'entretien agréé indépendant le plus près et pour télécharger les schémas, les vues éclatées et les listes de pièces
visitez notre site Web : www.generac.com

CERTIFICATE

This is to certify that

Generac Power Systems, Inc.

S45 W29290 Hwy. 59
Waukesha, WI 53189
United States of America

with the organizational units/sites as listed in the annex

has implemented and maintains a **Quality Management System**.

Scope:
Design, Manufacturing, and Distribution of Generators and Power Products.

Through an audit, documented in a report, it was verified that the management system fulfills the requirements of the following standard:

ISO 9001 : 2015

Certificate registration no.	10012920 QM15
Date of original certification	2013-12-09
Date of certification	2018-07-16
Valid until	2021-07-15

DQS Inc.

Brad McGuire
Managing Director

Annex to certificate
Registration No. 10012920 QM15

Generac Power Systems, Inc.

S45 W29290 Hwy. 59
Waukesha, WI 53189
United States of America

Location	Scope
10012920 **Generac Power Systems, Inc.** **S45 W29290 Hwy. 59** **Waukesha, WI 53189** **United States of America**	Design, Manufacturing of Generator Components and Distribution of Service Parts.
10012922 **Generac Power Systems, Inc.** **211 Murphy Dr.** **Eagle, WI 53119** **United States of America**	Manufacturing and Distribution of Generators.
10012923 **Generac Power Systems, Inc.** **757 N. Newcomb St.** **Whitewater, WI 53190** **United States of America**	Manufacturing and Distribution of Generators and Manufacture of Generator components.
10012924 **Generac Power Systems, Inc.** **900 N. Parkway** **Jefferson, WI 53549** **United States of America**	Manufacturing of Generators and Power Products.
10013528 **Generac Power Systems** **3815 Oregon St.** **Oshkosh, WI 54902** **United States of America**	Manufacturing of Generators.

Remote Location	Scope
10014175 **Generac Power Systems, Inc.** **351 Collins Road** **Jefferson, WI 53549** **United States of America**	The remote location at Jefferson, WI performs the following primary functions: Parts and Components Receiving, Inventory, and Distribution to Generac Locations.

This annex (edition: 2018-07-16) is only valid in connection with the above-mentioned certificate.

Member of IQNet
THE INTERNATIONAL CERTIFICATION NETWORK

UNITED STATES ENVIRONMENTAL PROTECTION AGENCY
2019 MODEL YEAR
CERTIFICATE OF CONFORMITY
WITH THE CLEAN AIR ACT

OFFICE OF TRANSPORTATION AND AIR QUALITY
ANN ARBOR, MICHIGAN 48105

Certificate Issued To: **FPT Industrial S.p.A.** (U.S. Manufacturer or Importer) **Certificate Number: KFPXL08.7TR3-006**	**Effective Date:** 07/16/2018 **Expiration Date:** 12/31/2019	**Byron J. Bunker, Division Director** **Compliance Division**	**Issue Date:** 07/16/2018 **Revision Date:** N/A

Model Year: 2019 **Manufacturer Type:** Original Engine Manufacturer **Engine Family:** KFPXL08.7TR3	**Mobile/Stationary Indicator:** Stationary **Emissions Power Category:** 225<=kW<450 **Fuel Type:** Diesel **After Treatment Devices:** No After Treatment Devices Installed **Non-after Treatment Devices:** No Non-After Treatment Devices Installed

Pursuant to Section 111 and Section 213 of the Clean Air Act (42 U.S.C. sections 7411 and 7547) and 40 CFR Part 60, and subject to the terms and conditions prescribed in those provisions, this certificate of conformity is hereby issued with respect to the test engines which have been found to conform to applicable requirements and which represent the following engines, by engine family, more fully described in the documentation required by 40 CFR Part 60 and produced in the stated model year.

This certificate of conformity covers only those new compression-ignition engines which conform in all material respects to the design specifications that applied to those engines described in the documentation required by 40 CFR Part 60 and which are produced during the model year stated on this certificate of the said manufacturer, as defined in 40 CFR Part 60.

It is a term of this certificate that the manufacturer shall consent to all inspections described in 40 CFR 1068 and authorized in a warrant or court order. Failure to comply with the requirements of such a warrant or court order may lead to revocation or suspension of this certificate for reasons specified in 40 CFR Part 60. It is also a term of this certificate that this certificate may be revoked or suspended or rendered void *ab initio* for other reasons specified in 40 CFR Part 60.

This certificate does not cover engines sold, offered for sale, or introduced, or delivered for introduction, into commerce in the U.S. prior to the effective date of the certificate.

	UNITED STATES ENVIRONMENTAL PROTECTION AGENCY **2020 MODEL YEAR** **CERTIFICATE OF CONFORMITY** **WITH THE CLEAN AIR ACT**	**OFFICE OF TRANSPORTATION** **AND AIR QUALITY** **ANN ARBOR, MICHIGAN 48105**

Certificate Issued To: FPT Industrial S.p.A. (U.S. Manufacturer or Importer) **Certificate Number: LFPXL08.7TR3-003**	**Effective Date:** **06/24/2019** **Expiration Date:** **12/31/2020**	**Byron J. Bunker, Division Director** **Compliance Division**	**Issue Date:** **06/24/2019** **Revision Date:** **N/A**

Model Year: 2020 **Manufacturer Type:** Original Engine Manufacturer **Engine Family:** LFPXL08.7TR3	**Mobile/Stationary Indicator:** Stationary **Emissions Power Category:** 225<=kW<450 **Fuel Type:** Diesel **After Treatment Devices:** No After Treatment Devices Installed **Non-after Treatment Devices:** No Non-After Treatment Devices Installed

Pursuant to Section 111 and Section 213 of the Clean Air Act (42 U.S.C. sections 7411 and 7547) and 40 CFR Part 60, and subject to the terms and conditions prescribed in those provisions, this certificate of conformity is hereby issued with respect to the test engines which have been found to conform to applicable requirements and which represent the following engines, by engine family, more fully described in the documentation required by 40 CFR Part 60 and produced in the stated model year.

This certificate of conformity covers only those new compression-ignition engines which conform in all material respects to the design specifications that applied to those engines described in the documentation required by 40 CFR Part 60 and which are produced during the model year stated on this certificate of the said manufacturer, as defined in 40 CFR Part 60.

It is a term of this certificate that the manufacturer shall consent to all inspections described in 40 CFR 1068 and authorized in a warrant or court order. Failure to comply with the requirements of such a warrant or court order may lead to revocation or suspension of this certificate for reasons specified in 40 CFR Part 60. It is also a term of this certificate that this certificate may be revoked or suspended or rendered void *ab initio* for other reasons specified in 40 CFR Part 60.

This certificate does not cover engines sold, offered for sale, or introduced, or delivered for introduction, into commerce in the U.S. prior to the effective date of the certificate.

United States Environmental Protection Agency Warranty Statement
(Stationary Emergency Compression-Ignition Generators)

Warranty Rights, Obligations and Coverage

Your emission-related warranty covers only components whose failure would increase an engine's emissions of any regulated pollutant where they are designed, built, and equipped to be free from defects in materials and workmanship under applicable regulations of section 213 of the clean air act. To receive information about how to make an emission-related warranty claim, and how to make arrangements for authorized repairs call **1-800-333-1322** or **www.generac.com**. Emission- related warranty claims may be denied without proof of proper maintenance or use, accidents beyond the control of the manufacturer, or act of God. Proper maintenance is specified in the Owner's Manual. Usage is limited to stationary emergency operations and 100 hours per year for maintenance and readiness testing. The warranty period begins when the engine is placed into service. Warranty periods for compression ignition engines greater than 25 horsepower is five years. This warranty is applicable to compression-ignition generator models; equal to and larger than an SD80 starting 1/1/2011, equal to and larger than an SD35 starting 1/1/2012, and all compression-ignition generator models starting 1/1/2013.

Important Note

This warranty statement explains your rights and obligations under the Emission Control System Warranty, which is provided to you by Generac pursuant to federal law. Note that this warranty shall not apply to any incidental, consequential or indirect damages caused by defects in materials or workmanship or any delay in repair or replacement of the defective part(s). This warranty is in place of all other warranties, expressed or implied. Specifically, Generac makes no other warranties as to the merchantability or fitness for a particular purpose. Any implied warranties which are allowed by law, shall be limited in duration to the terms of the express warranty provided herein. Some states do not allow limitations on how long an implied warranty lasts, so the above limitation may not apply to you.

April 23, 2021, Updated Validity date 5/24/21

Eric Aulls
City of Brea
1 Civic Center Circle
Brea, CA 92821

Reference: City of Brea Carbon Canyon BPS 3, Generac Quote 20463597

We are pleased to offer the following quote for the above project:

Quantity 1 - Generac Industrial diesel engine-driven generator set with turbocharged/aftercooled 6-cylinder 6.7L engine, consisting of the following features and accessories:

- Stationary Emergency-Standby rated
- 175 kW Rating, wired for 277/480 VAC three phase, 60 Hz
- Permanent Magnet Excitation
- No Enclosure (open-set)
- UL2200
- EPA Certified
- H-100 Control Panel
    - Meets NFPA 99 and 110 requirements
    - Temp Range -40 to 70 degrees C
    - Digital Microprocessor:
        - Two 4-line x 20 displays, full system status
        - 3 Phase sensing, +/-0.25% digital voltage regulation
        - RS232, RS485 and Canbus remote ports
        - Waterproof connections
        - All engine sensors are 4-20ma for minimal interference
        - Programmable I/O
        - Built-in PLC for special applications
    - Engine function monitoring and control:
        - Full range standby operation; programmable auto crank, Emergency Stop, Auto-Off-Manual switch
        - Isochronous Governor, +/-0.25% frequency regulation
        - Full system status on all AC output and engine function parameters
        - Service reminders, trending, fault history (alarm log)
        - I2T function for full generator protection
        - Selectable low-speed exercise
    - HTS transfer switch function monitoring and control
    - 2-wire start controls for any 2-wire transfer switch
- 21 Light Annunciator - Surface
- Remote Emergency Stop Switch, Break-Glass, shipped loose
- 110 AH, 925 CCA Group 31 Batteries, dual-paralleled, with rack, installed
- Standard MLCB, 80% rated thermal-magnetic
    - 300 Amp
    - Shunt trip and Auxiliary Contacts
- Battery Charger, 10 Amp, NFPA 110 compliant, installed
- Coolant Heater, 1500W, 208 V
- 24 hour fuel tank with 12” normal vent; 2” overfill protection valve with locking cap, this valve will reduce the useable gallons of the fuel tank, overfill protection valve to have scully connector, set shut off at 95%; and 5 gallon fill/spill containment system (open market)

- Seismic isolators by Mason Industries mounted between base frame and engine/alternator assembly. (open market)
- Certified seismic type SASE-SS anchor bolts and washers to mount unit to concrete pad are shipped loose open market).
- Certified seismic calculations done by seismic isolator vendor. One set of calculations required per site. Seismic qualification/calculations site information form to be completed and submitted at time of order. Seismic certificate of compliance per IBC 2012 Section 1708.5. One certificate required per rating. Certification is based on calculations and not sharker table testing (open market).
- 3 Owner's Manuals
- Engine Run Relay
- Critical Muffler - Ship Loose
- Standard 2-Year Limited Warranty
- SD0175KG176.7D18HPNL3

Total investment for the above equipment (Not including any applicable tax or freight):	**$38,741.82**
Startup and Test by local authorized Generac Industrial Distributor:	$ 1,815.00
Optional 4 hour load bank test:	$ 880.00
Freight from factory to Brea, CA:	$ 3,515.00

Generac's local distributor offers air quality permitting services and generator maintenance agreements. Please inquire with your Generac/Distributor representative if interested.

SPECIAL ADVISORY NOTICE

SOUTH COAST AIR QUALITY MANAGEMENT DISTRICT APPLICATIONS

The South Coast Air Quality Management District (SCAQMD) in southern California is undergoing a change to their Rule 1470 which governs stationary compression-ignition/diesel engines in stationary emergency electrical generating sets which will go into effect Jan. 1, 2013. The change to Rule 1470 will involve modifications to administrative and performance requirements, which affect the installation and operation of the generating set. Generators with a stack located within 50 meters of a sensitive receptor will require a diesel particulate filter. This device is not included in this quotation unless noted.

While generating sets produced by Generac Power Systems include the latest EPA-certified compression-ignition/diesel engines allowed for use in stationary emergency applications, special localized requirements may be added and are generally administered through an equipment site permitting process, including a Permit to Construct and Permit to Operate by the air district.

The final SCAQMD Rule 1470 requirements require the addition of a CARB-verified diesel particulate filter device to the exhaust system of the standard federally-compliant engine used on the generating set if the stack is located within 50 meters of a sensitive receptor.

This notice is to alert purchasers and owners/operators of this equipment to this recent development, and that issuance and acceptance of this quotation does not constitute a guarantee by Generac Power Systems or their local distributor of product conformance or instability within the region of SCAQMD jurisdiction or anywhere else that may add additional regulatory requirements during the permitting phases. Generac's local distributor can provide a quotation to add the necessary diesel particulate filters to comply with SCAQMD's new requirements of Rule 1470 modifications.

Terms and Conditions

Terms and conditions as listed on GSA Contract # GS-07F-0407X unless otherwise negotiated. Net 30 days, subject to review and approval by our Credit Dept. Payment obligations are not dependent or contingent upon the manner in which purchaser may receive payment from others. No retainage against this order will be permitted unless agreed to ahead of time. Warranty is invalid without factory start up.

Startup will be done during normal business hours. Additional charges will be applied to startups requested on weekends or off normal business hours. Startup is quoted as an open market item.

Prices valid through September 30, 2021. Note, items quoted as open market items are offered at most favorable customer pricing.

Estimated Delivery: 17-19 weeks ARO subject to change. Please confirm with factory at time of order.
FOB: Pre Pay/Origin

GSA Contract# GS-07F-0407X
DUNS 006103055
CAGE 3KDJ8

ACCEPTANCE
All quotations are subject to prompt acceptance and transmittal of order. Prices are subject to change without notice unless otherwise stated. Contracts and agreements are not valid unless approved and accepted in writing in the corporate office in Waukesha, WI. However, all contracts shall be deemed to have been executed in Wisconsin.

DELIVERIES
Promises of delivery are given as accurately as conditions will permit, but seller does not guarantee to accomplish shipments on date or dates mentioned.

DELAYS
Deliveries under all contracts and agreements are contingent upon acts of providence, strikes, accidents, governmental priority regulations and other causes of delay beyond the seller's control, and in no event will the seller by liable for consequential delays or losses.

DELAYS OF PAYMENT TO THE SELLER
Payment is due to Generac upon the agreed terms as listed in the quote. Generac is responsible for providing the equipment and services as listed in the quote and is not an installation contractor. Generac is not responsible for cancelations or delays in construction, equipment not being ready for startup as scheduled, improper installation per the equipment installation guidelines, not possessing the proper permits, not meeting NEC, NFPA or any other local or national codes as it pertains to the equipment installation. A fee will be charged of 3% of the equipment cost per month beyond 15 days of the terms listed in the quote for delays in payment for any of the listed reasons. No retention of any portion allowed unless noted in this quotation

NOT A CONTRACTOR
Generac is a supplier of materials and related services as listed in this quote. Generac is not a contractor. Generac is not responsible for any part of the installation of the supplied equipment, including but not limited to the following: permits, meeting installation codes, pouring concrete, building of generator room, plumbing, piping, fuel, proper fuel supply, exhaust system installation, proper ducting, insulation, wiring, mounting, field painting, or anchoring of equipment.

CANCELLATIONS
Orders cannot be scheduled, cancelled, specifications changed or goods returned without seller's prior permission. Acceptance is conditional upon reimbursement for consequential loss to the seller. Change order costs will be quoted by the seller at the time of change. Some change orders may not be possible depending on when changes are requested during production of the order. A minimum 30% restocking fee will be charged for any and all cancelled orders if accepted by the seller. Special orders may not be accepted by the seller for return.

STORAGE FEES
Units stored beyond 15 days of originally scheduled delivery date will be charged 3% of the sell price per month.

SHIPMENT
Off loading and placement of the goods shall be solely your responsibility. All deliveries are Monday through Friday 9:00 a.m. to 3:00 p.m. Second attempt deliveries or deliveries outside normal business hours will be invoiced as necessary. Deliveries to customer's site are subject to standby fees if the truck is not unloaded within one (1) hour of arrival at the customer's site. A standby fee of $135.00 per hour will be charged for each hour the truck has to wait to be unloaded.

STARTUP & TEST
Generac's local distributor will perform one (1) initial Startup & Test upon completion of installation by others if included in the quote. They will not perform a Startup & Test until you have properly completed the installation and returned the completed Installation Check List to the local distributor. Startup & Test conducted during normal business hours as listed above. Fuel for testing and filling is not included unless as noted in this quote. Startup & Test outside normal business hours will be invoiced as necessary.
1. One Startup & Test service call to the jobsite is included unless noted. Additional trips due to jobsite conditions beyond our control will be invoiced as necessary; this includes second trips because of improper or incomplete installation issues.
2. Start & Test will be conducted per specifications and using available building load unless noted. Building load should be available during startup & test so the generator can be adjusted properly for the building load. Additional trips to test with building load will be invoiced as necessary.

PERMITS AND LICENSES
Permit costs (including Air Quality/SCAQMD) are not included in this quote unless noted as such on the quote. Generac's local distributor can assist in providing information as may be necessary for the acquisition of permits and licenses. Generac's local distributor offers air quality permitting services at an additional charge if needed.

PURCHASE OR LEASE ORDER POLICY
Orders will be placed when the signed quotations and purchase orders or lease documents are returned to Generac.

WARRANTIES
The seller's liability is limited to making good defects in workmanship or material under the manufacturer's warranty and shall not exceed the purchase price of the defective item. The seller in no event shall be liable for damages to persons or property arising out of the use of items sold. The equipment must have reasonable means and access for warranty repair to be done. This includes the means and access for removal of the complete generator assembly and/or major components. If reasonable access is not provided, additional charges not covered by warranty will apply. This warranty supersedes all prior assurances, written or oral made by the seller, its agents or representatives.

PERFORMANCES
Information provided concerning performance of equipment listed hereon are engineering estimates only and no guarantee to meet such specifications is to be implied.

CONFIDENTIAL INFORMATION
This proposal as well as all information therein, including prints, brochures, etc., are confidential and intended only for the purchaser's use and are not to be used in any way detrimental to the seller.

TERMS OF THE SALE

This quotation is governed by and subject to Generac's Quotation Terms and Conditions located at *www.generac.com/about-us/customer-support* which are incorporated by reference. Generac's Quotation Terms and Conditions are subject to change at any time and Buyer is advised to review the same before acceptance of future orders. Unless pursuant to a written agreement mutually executed by both parties, the terms of this Quotation shall be binding upon the parties, and any other terms, communications or documents concerning this order are to be disregarded and hereby expressly rejected.

Unless otherwise specifically stated, terms are net on invoice based on the date of invoice. F.O.B. delivered, sales or use taxes, any type of property tax or any manufacturer's or other excise tax levied by federal, state or municipal government or any sub-division thereof, are the liability of the purchaser and if paid by the seller are rechargeable to the purchaser. All sales are subject to the approval of our credit department. This and all subsequent purchases are payable to Generac Power System, Inc. The seller reserves the right to cancel this contract and collect fees as noted in “cancellations” upon:
1. Breach of contract by the purchaser.
2. Failure by purchaser to make payments as required.
3. Insolvency or bankruptcy of the purchaser the seller may require advance payment for security or may cancel an order if the seller, in good faith, doubts the purchaser’s ability to pay in general.
No terms contained in the purchaser's purchase order, shipping request or other communications shall vary the terms and conditions of this agreement, expressed herein, whether or not shipment of the goods followed receipt of such purchase order or any other communication.

Sincerely,

Lynn S. Jones, CTSM
Account Manager - Government Sales

Acceptance of Quote

Prior to ordering equipment or services, please sign and return as a confirmation of the above terms and conditions

Engineering Submittal Package

City of Brea

Prepared and Submitted by:
Lynn Jones
Account Manager - Government Sales
Generac
920-230-1280
lynn.jones@generac.com
www.generac.com

Table of Contents

SPECIFICATION SHEET

0K5096	SD175 6.7L

CONTROL PANEL AND OPTIONS

0161920SBY	10 AMP ENGINE-RUN RELAY
0172110SBY	SPEC SHEET H-100 CONTROL PANEL
0604160SSD	21-LIGHT/RELAY PANEL DATA

ALTERNATOR AND OPTIONS

0182630SSD	G26 ALT DATA SHEET 200 KW
0187980SBY	GENPROTECT DATA SHEET

UNIT OPTIONS

0161970SBY	BATTERY INDEX
0180230SBY	SPEC SHEET RHINO COAT
0189370SSD	EATON CB TABLE THERM/MAG
0191900SBY	2.5A & 10A BATT CHRGR H&G
0192390SSD	EATON CB LUG DATA
065801_SBM	MUFFLER CRITICAL 4 FLANG
084918H_SBM	HEATER BLOCK 1500W 240V
0A5215D_SBM	FLEX PIPE 4"
0H4314_SBM	EV MUFFLER EXT OP SET D6.7

0L6262	E STOP BRK GLS H PNL SUBM

INSTALLATION DRAWINGS

0J4194	INSTALL D6.7L OPEN SET D-GRP

GENSET ELECTRICAL DRAWINGS

0H9882	WD D6.7L G17 H-PANEL
0H9883	SD D6.7L G17 H-PANEL

SYSTEM INTERCONNECT DRAWINGS

0191120SSD	INTERCONNECT DIAG H PANEL

EMISSIONS DATA

0185140SSD	SOUND DATA SD175 6.7L
0185150SSD	SOUND DATA SD175 6.7L
A0001316718	EMISSIONS SD175 D6.7 2021
A0001350199	MFPXL06.7DGS_002

CERTIFICATIONS

0184520SSD	QUALITY CERTIFICATION DOC
0K3486	STANDARD 2B WARRANTY
0K8347	ISO CERTIFICATE 9001 : 20
A0000083487	2019 EPA CERT KFPXL06.7DGS-007
A0000519419	2020 EPA CERT LFPXL06.7DGS-005
EMSNWRNTY003	EPA WARRANTY STATEMENT US

SD175 | 6.7L | 175 kW

INDUSTRIAL DIESEL GENERATOR SET

EPA Certified Stationary Emergency

GENERAC | INDUSTRIAL POWER

STANDBY POWER RATING

175 kW, 219 kVA, 60 Hz

PRIME POWER RATING*

158 kW, 197 kVA, 60 Hz

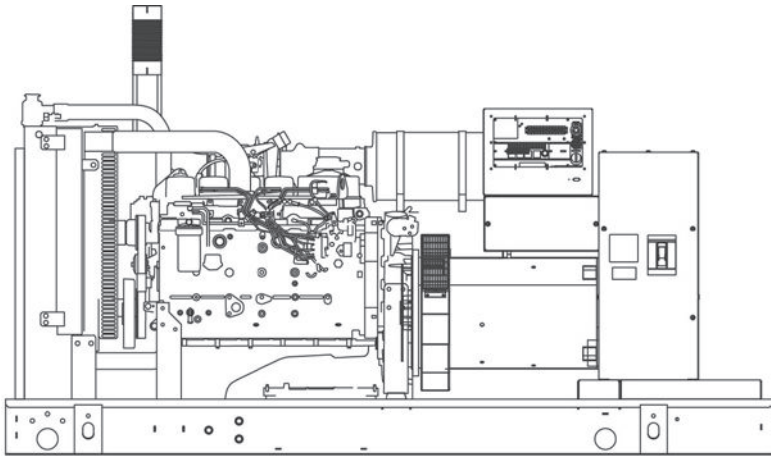

*Built in the USA using domestic and foreign parts

*EPA Certified Prime ratings are not available in the U.S. or its Territories.

**Certain options or customization may not hold certification valid.

Image used for illustration purposes only

CODES AND STANDARDS

Generac products are designed to the following standards:

UL2200, UL508, UL142, UL498

NFPA70, 99, 110, 37

NEC700, 701, 702, 708

ISO9001, 8528, 3046, 7637, Pluses #2b, 4

NEMA ICS10, MG1, 250, ICS6, AB1

ANSI C62.41

POWERING AHEAD

For over 50 years, Generac has led the industry with innovative design and superior manufacturing.

Generac ensures superior quality by designing and manufacturing most of its generator components, including alternators, enclosures and base tanks, control systems and communications software.

Generac's gensets utilize a wide variety of options, configurations and arrangements, allowing us to meet the standby power needs of practically every application.

Generac searched globally to ensure the most reliable engines power our generators. We choose only engines that have already been proven in heavy-duty industrial application under adverse conditions.

Generac is committed to ensuring our customers' service support continues after their generator purchase.

SD175 | 6.7L | 175 kW

INDUSTRIAL DIESEL GENERATOR SET

EPA Certified Stationary Emergency

GENERAC | INDUSTRIAL POWER

STANDARD FEATURES

ENGINE SYSTEM

General

- Oil Drain Extension
- Air Cleaner
- Fan Guard
- Stainless Steel flexible exhaust connection
- Critical Exhaust Silencer (enclosed only)
- Factory Filled Oil
- Radiator Duct Adapter (open set only)

Fuel System

- Fuel lockoff solenoid
- Primary fuel filter

Cooling System

- Closed Coolant Recovery System
- UV/Ozone resistant hoses
- Factory-Installed Radiator
- Radiator Drain Extension
- 50/50 Ethylene glycol antifreeze
- 120 VAC Coolant Heater

Engine Electrical System

- Battery charging alternator
- Battery cables
- Battery tray
- Solenoid activated starter motor
- Rubber-booted engine electrical connections

ALTERNATOR SYSTEM

- UL2200 GENprotect™
- 12 leads (3-phase, non 600 V)
- Class H insulation material
- Vented rotor
- 2/3 pitch
- Skewed stator
- Auxiliary voltage regulator power winding
- Amortisseur winding
- Brushless Excitation
- Sealed Bearings
- Automated manufacturing (winding, insertion, lacing, varnishing)
- Rotor dynamically spin balanced
- Full load capacity alternator
- Protective thermal switch

GENERATOR SET

- Internal Genset Vibration Isolation
- Separation of circuits - high/low voltage
- Separation of circuits - multiple breakers
- Silencer Heat Shield
- Wrapped Exhaust Piping
- Silencer housed in discharge hood (enclosed only)
- Standard Factory Testing
- 2 Year Limited Warranty (Standby rated Units)
- 1 Year Limited Warranty (Prime rated Units)
- Silencer mounted in the discharge hood (enclosed only)

ENCLOSURE (IF SELECTED)

- Rust-proof fasteners with nylon washers to protect finish
- High performance sound-absorbing material
- Gasketed doors
- Stamped air-intake louvers
- Air discharge hoods for radiator-upward pointing
- Stainless steel lift off door hinges
- Stainless steel lockable handles
- Rhino Coat™ - Textured polyester powder coat

TANKS (IF SELECTED)

- UL 142
- Double wall
- Vents
- Sloped top
- Sloped bottom
- Factory pressure tested (2 psi)
- Rupture basin alarm
- Fuel level
- Check valve in supply and return lines
- Rhino Coat™- Textured polyester powder coat
- Stainless hardware

CONTROL SYSTEM

Control Panel

- Digital H Control Panel - Dual 4x20 Display
- Programmable Crank Limiter
- 7-Day Programmable Exerciser
- Special Applications Programmable PLC
- RS-232/485
- All-Phase Sensing DVR
- Full System Status
- Utility Monitoring
- Low Fuel Pressure Indication
- 2-Wire Start Compatible
- Power Output (kW)
- Power Factor
- kW Hours, Total & Last Run
- Real/Reactive/Apparent Power
- All Phase AC Voltage
- All Phase Currents
- Oil Pressure
- Coolant Temperature
- Coolant Level
- Engine Speed
- Battery Voltage
- Frequency
- Date/Time Fault History (Event Log)
- Isochronous Governor Control
- Waterproof/sealed Connectors
- Audible Alarms and Shutdowns
- Not in Auto (Flashing Light)
- Auto/Off/Manual Switch
- E-Stop (Red Mushroom-Type)
- NFPA110 Level I and II (Programmable)
- Customizable Alarms, Warnings, and Events
- Modbus protocol
- Predictive Maintenance algorithm
- Sealed Boards
- Password parameter adjustment protection
- Single point ground
- 15 channel data logging
- 0.2 msec high speed data logging
- Alarm information automatically comes up on the display

Alarms

- Oil Pressure (Pre-programmable Low Pressure Shutdown)
- Coolant Temperature (Pre-programmed High Temp Shutdown)
- Coolant Level (Pre-programmed Low Level Shutdown)
- Low Fuel Pressure Alarm
- Engine Speed (Pre-programmed Over speed Shutdown)
- Battery Voltage Warning
- Alarms & warnings time and date stamped
- Alarms & warnings for transient and steady state conditions
- Snap shots of key operation parameters during alarms & warnings
- Alarms and warnings spelled out (no alarm codes)

SD175 | 6.7L | 175 kW

INDUSTRIAL DIESEL GENERATOR SET

EPA Certified Stationary Emergency

GENERAC | INDUSTRIAL POWER

CONFIGURABLE OPTIONS

ENGINE SYSTEM

General

- O Oil Heater
- O Industrial Exhaust Silencer

Fuel System

- O Flexible fuel lines
- O Primary fuel filter

Engine Electrical System

- O 10A UL battery charger
- O 2.5A UL battery charger
- O Battery Warmer

ALTERNATOR SYSTEM

- O Alternator Upsizing
- O Anti-Condensation Heater
- O Tropical coating
- O Permanent Magnet Excitation

CIRCUIT BREAKER OPTIONS

- O Main Line Circuit Breaker
- O 2nd Main Line Circuit Breaker
- O Shunt Trip and Auxiliary Contact
- O Electronic Trip Breaker

GENERATOR SET

- O Gen-Link Communications Software (English Only)
- O IBC Seismic Certification
- O 8 Position Load Center
- O 2 Year Extended Warranty
- O 5 Year Warranty
- O 5 Year Extended Warranty

ENCLOSURE

- O Weather Protected
- O Level 1 Sound Attenuation
- O Level 2 Sound Attenuation
- O Steel Enclosure
- O Aluminum Enclosure
- O 150 MPH Wind Kit
- O 12 VDC Enclosure Lighting Kit
- O 120 VAC Enclosure Lighting Kit
- O AC/DC Enclosure Lighting Kit
- O Door Alarm Switch

TANKS (Size on last page)

- O Electrical Fuel Level
- O Mechanical Fuel Level
- O 8” Fill Extension
- O 13” Fill Extension

CONTROL SYSTEM

- O 21-Light Remote Annunciator
- O Remote Relay Panel (8 or 16)
- O Oil Temperature Sender with Indication Alarm
- O Remote E-Stop (Break Glass-Type, Surface Mount)
- O Remote E-Stop (Red Mushroom-Type, Surface Mount)
- O Remote E-Stop (Red Mushroom-Type, Flush Mount)
- O Remote Communication - Modem
- O Remote Communication - Ethernet
- O 10A Run Relay
- O Ground Fault Indication and Protection Functions

ENGINEERED OPTIONS

ENGINE SYSTEM

- O Coolant heater ball valves
- O Block Heaters
- O Fluid containment pans

ALTERNATOR SYSTEM

- O 3rd Breaker Systems

CONTROL SYSTEM

- O Spare inputs (x4) / outputs (x4) - H Panel Only
- O Battery Disconnect Switch

GENERATOR SET

- O Special Testing

ENCLOSURE

- O Motorized Dampers
- O Door switched for intrusion alert
- O Enclosure ambient heaters

TANKS

- O Overfill Protection Valve
- O UL2085 Tank
- O ULC S-601 Tank
- O Stainless Steel Tank
- O Special Fuel Tanks (MIDEQ and FL DEP/DERM, etc.)
- O Vent Extensions

RATING DEFINITIONS

Standby - Applicable for a varying emergency load for the duration of a utility power outage with no overload capability.

Prime - Applicable for supplying power to a varying load in lieu of utility for an unlimited amount of running time. A 10% overload capacity is available for 1 out of every 12 hours. The Prime Power option is only available on International applications. Power ratings in accordance with ISO 8528-1, Second Edition

SD175 | 6.7L | 175 kW

INDUSTRIAL DIESEL GENERATOR SET

EPA Certified Stationary Emergency

GENERAC | INDUSTRIAL POWER

APPLICATION AND ENGINEERING DATA

ENGINE SPECIFICATIONS

General

Make	Generac
EPA Emissions Compliance	Stationary Emergency
EPA Emissions Reference	See Emissions Data Sheet
Cylinder #	6
Type	In-Line
Displacement - L (cu In)	6.7 (406.86)
Bore - mm (in)	104 (4.09)
Stroke - mm (in)	128 (5.2)
Compression Ratio	16.5:1
Intake Air Method	Turbocharged/Aftercooled
Cylinder Head Type	4 Valve
Piston Type	Alloy Aluminum
Crankshaft Type	Forged Steel

Engine Governing

Governor	Electronic Isochronous
Frequency Regulation (Steady State)	+/- 0.25%

Lubrication System

Oil Pump Type	Gear
Oil Filter Type	Full Flow Cartridge
Crankcase Capacity - L (qts)	19.6 (20.7)

Cooling System

Cooling System Type	Closed Recovery
Water Pump	Belt Driven Centrifugal
Fan Type	Pusher
Fan Speed (rpm)	2538
Fan Diameter mm (in)	-
Coolant Heater Wattage	1500
Coolant Heater Standard Voltage	120 V /240 V

Fuel System

Fuel Type	Ultra Low Sulfur Diesel Fuel
Fuel Specifications	ASTM
Fuel Filtering (microns)	5
Fuel Injection	Electronic
Fuel Pump Type	Engine Driven Gear
Injector Type	Electronic
Fuel Supply Line mm (in)	12.7 (0.5) NPT
Fuel Return Line mm (in)	12.7 (0.5) NPT

Engine Electrical System

System Voltage	12 VDC
Battery Charging Alternator	Std
Battery Size	See Battery Index 0161970SBY
Battery Voltage	12 VDC
Ground Polarity	Negative

ALTERNATOR SPECIFICATIONS

Standard Model	520
Poles	4
Field Type	Revolving
Insulation Class - Rotor	H
Insulation Class - Stator	H
Total Harmonic Distortion	<5%
Telephone Interference Factor (TIF)	<50

Standard Excitation	Permanent Magnet
Bearings	Single Seated Cartridge
Coupling	Direct, Flexible Disc
Load Capacity - Standby	100%
Prototype Short Circuit Test	Yes
Voltage Regulator Type	Digital
Number of Sensed Phases	3
Regulation Accuracy (Steady State)	±0.25%

SD175 | 6.7L | 175 kW

INDUSTRIAL DIESEL GENERATOR SET

EPA Certified Stationary Emergency

GENERAC® | INDUSTRIAL POWER

OPERATING DATA

POWER RATINGS

		Standby	
Single-Phase 120/240 VAC @1.0pf	175 kW	Amps:	729
Three-Phase 120/208 VAC @0.8pf	175 kW	Amps:	607
Three-Phase 120/240 VAC @0.8pf	175 kW	Amps:	526
Three-Phase 277/480 VAC @0.8pf	175 kW	Amps:	263
Three-Phase 346/600 VAC @0.8pf	175 kW	Amps:	210

STARTING CAPABILITIES (sKVA)

sKVA vs. Voltage Dip

		480 VAC						208/240 VAC					
Alternator	kW	10%	15%	20%	25%	30%	35%	10%	15%	20%	25%	30%	35%
Standard	200	187	280	373	467	560	653	140	210	280	350	420	490
Upsize 1	250	263	395	527	658	790	922	197	296	395	494	593	692
Upsize 2	300	303	454	605	757	908	1059	227	341	454	568	681	794

FUEL CONSUMPTION RATES*

Fuel Pump Lift - ft (m)
3 (1)

Total Fuel Pump Flow (Combustion + Return)
29.0 gal/hr

Diesel - gal/hr (l/hr)

Percent Load	Standby
25%	3.9 (14.8)
50%	7.3 (27.6)
75%	10.5 (39.7)
100%	13.5 (51.1)

* Fuel supply installation must accommodate fuel consumption rates at 100% load.

COOLING

		Standby
Coolant Flow per Minute	gal/min (l/min)	44.6 (168.8)
Coolant System Capacity	gal (L)	7.5 (28.4)
Heat Rejection to Coolant	BTU/hr	497,718
Inlet Air	cfm (m^3/hr)	7946 (13502)
Max. Operating Radiator Air Temp	F° (C°)	122 (50)
Max. Ambient Temperature (before derate)	F° (C°)	104 (40)
Maximum Radiator Backpressure	in H_2O	0.5

COMBUSTION AIR REQUIREMENTS

		Standby
Flow at Rated Power	cfm (m^3/min)	470 (13.31)

ENGINE

		Standby
Rated Engine Speed	rpm	1800
Horsepower at Rated kW**	hp	279
Piston Speed	ft/min (m/min)	1559 (475)
BMEP	psi	257

** Refer to "Emissions Data Sheet" for maximum bHP for EPA and SCAQMD permitting purposes.

EXHAUST

		Standby
Exhaust Flow (Rated Output)	cfm (m^3/min)	1326 (37.55)
Max. Backpressure (Post Silencer)	inHg (Kpa)	1.5 (5.1)
Exhaust Temp (Rated Output)	°F (°C)	1040 (560)
Exhaust Outlet Size (Open Set)	mm (in)	101.6 (4)

Deration – Operational characteristics consider maximum ambient conditions. Derate factors may apply under atypical site conditions.
Please consult a Generac Power Systems Industrial Dealer for additional details. All performance ratings in accordance with ISO3046, BS5514, ISO8528 and DIN6271 standards.

SD175 | 6.7L | 175 kW

INDUSTRIAL DIESEL GENERATOR SET

EPA Certified Stationary Emergency

GENERAC® | INDUSTRIAL POWER

DIMENSIONS AND WEIGHTS*

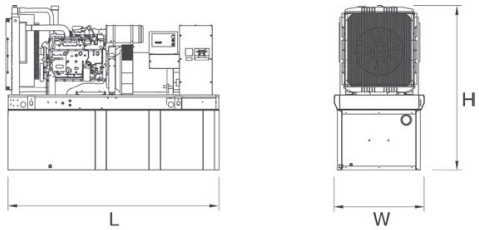

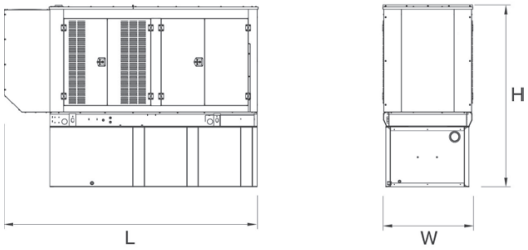

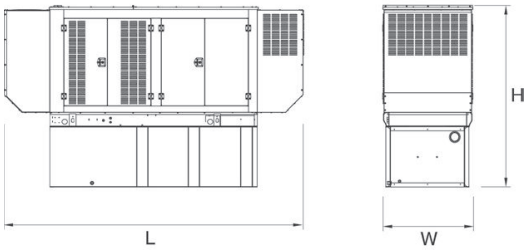

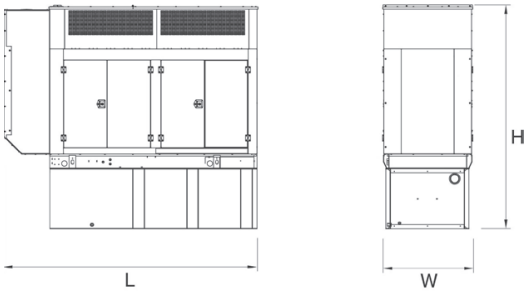

OPEN SET

RUN TIME HOURS	USABLE CAPACITY GAL (L)	L x W x H in (mm)	WT lbs (kg) - Tank & Open Set
NO TANK		117 (2972) x 50 (1270) x 57 (1448)	3980 (1805)
10	134 (507)	117 (2972) x 50 (1270) x 71 (1803)	4764 (2161)
24	322 (1219)	117 (2972) x 50 (1270) x 82 (2083)	5052 (2292)
38	510 (1930.6)	117 (2972) x 50 (1270) x 94 (2388)	5345 (2424)
51	693 (2623.3)	136 (3454) x 53 (1346) x 98 (2489)	5575 (2530)
70	946 (3581)	208 (5283) x 53 (1346) x 98 (2489)	7005 (3117)
98	1325 (5015.7)	278 (7061) x 53 (1346) x 96 (2438)	8020 (3638)

STANDARD ENCLOSURE

RUN TIME HOURS	USABLE CAPACITY GAL (L)	L x W x H in (mm)	WT lbs (kg) - Enclosure Only	
			Steel	Aluminum
NO TANK	-	143 (3632) x 50 (1270) x 68 (1727)	850 (386)	280 (127)
10	134 (507)	143 (3632) x 50 (1270) x 81 (2057)		
24	322 (1219)	143 (3632) x 50 (1270) x 93 (2362)		
38	510 (1930.6)	143 (3632) x 50 (1270) x 105 (2667)		
51	693 (2623.3)	143 (3632) x 53 (1346) x 109 (2769)		
70	946 (3581)	208 (5283) x 53 (1346) x 109 (2769)		
98	1325 (5015.7)	278 (7061) x 53 (1346) x 107 (2718)		

LEVEL 1 ACOUSTIC ENCLOSURE

RUN TIME HOURS	USABLE CAPACITY GAL (L)	L x W x H in (mm)	WT lbs (kg) - Enclosure Only	
			Steel	Aluminum
NO TANK	-	168 (4267) x 50 (1270) x 68 (1727)	1050 (476)	347 (157)
10	134 (507)	168 (4267) x 50 (1270) x 81 (2057)		
24	322 (1219)	168 (4267) x 50 (1270) x 93 (2362)		
38	510 (1930.6)	168 (4267) x 50 (1270) x 105 (2667)		
51	693 (2623.3)	168 (4267) x 53 (1346) x 109 (2769)		
70	946 (3581)	234 (5944) x 53 (1346) x 109 (2769)		
98	1325 (5015.7)	304 (7722) x 53 (1346) x 107 (2718)		

LEVEL 2 ACOUSTIC ENCLOSURE

RUN TIME HOURS	USABLE CAPACITY GAL (L)	L x W x H in (mm)	WT lbs (kg) - Enclosure Only	
			Steel	Aluminum
NO TANK	-	143 (3632) x 50 (1270) x 92 (2337)	1250 (567)	413 (187)
10	134 (507)	143 (3632) x 50 (1270) x 105 (2667)		
24	322 (1219)	143 (3632) x 50 (1270) x 117 (2972)		
38	510 (1930.6)	143 (3632) x 50 (1270) x 129 (3278)		
51	693 (2623.3)	143 (3632) x 53 (1346) x 133 (3378)		
70	946 (3581)	208 (5283) x 53 (1346) x 133 (3378)		
98	1325 (5015.7)	278 (7061) x 53 (1346) x 131 (3327)		

*All measurements are approximate and for estimation purposes only. Sound dBA can be found on the sound data sheet. Enclosure Only weight is added to Tank & Open Set weight to determine total weight.

YOUR FACTORY RECOGNIZED GENERAC INDUSTRIAL DEALER

Specification characteristics may change without notice. Dimensions and weights are for preliminary purposes only. Please consult a Generac Power Systems Industrial Dealer for detailed installation drawings.

Generac Power Systems, Inc. | P.O. Box 8 | Waukesha, WI 53187
P: (262) 544-4811 © 2015 Generac Power Systems, Inc. All rights reserved. All specifications are subject to change without notice.

Part No 0K5096
Rev. C 06/08/15

ENGINE RUN RELAY

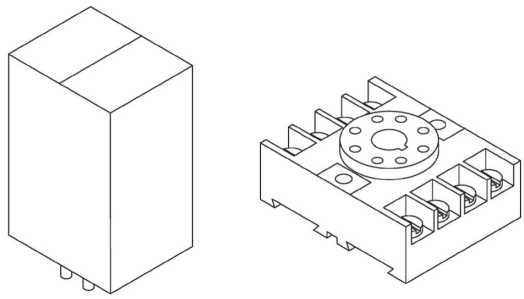

- For use with Generac's Digital Control Platforms
- 10 Amp Contact Rating
- 12 or 24 Volt DC Input
- Contact Open or Closure on Engine Run

Contacts	
Type	DPDT
Material	Silver
Rating	UL 10A @ 240VAC 10A @ 30VDC
Coils	
Input Voltage	24VDC
Resistance	400 Ohms
Nominal Power	1.5W

Wiring Diagram with E panel, H-100 Panel

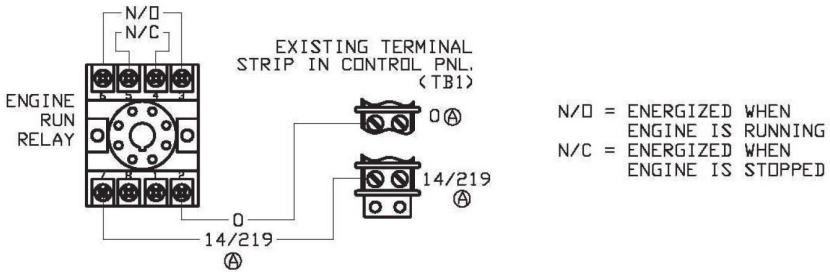

Wiring Diagram with PMDCP

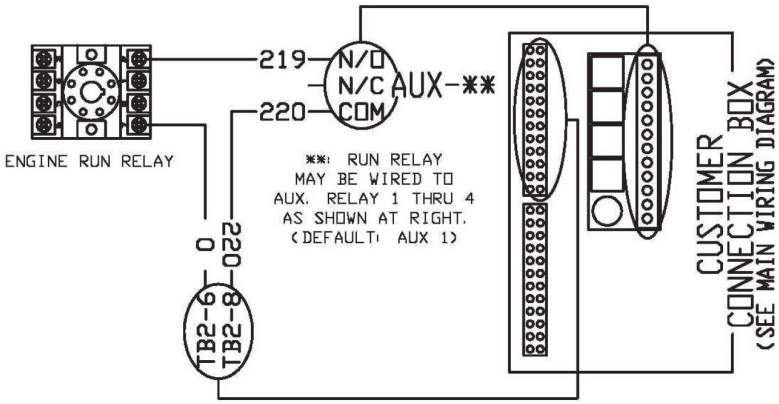

Wiring Diagram with Power Zone Pro Sync

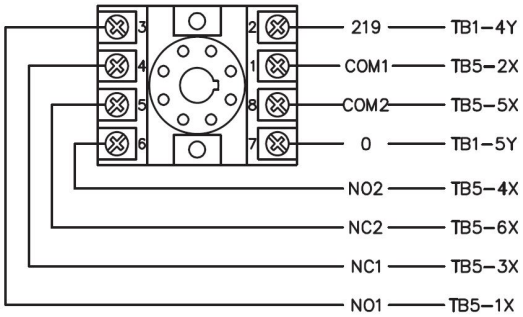

TB5

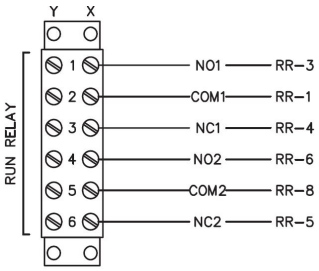

Pin Detail

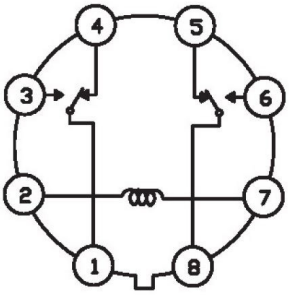

Generac Power Systems, Inc. | P.O. Box 8 | Waukesha, WI 53187
P: (262) 544-4811 © 2019 Generac Power Systems, Inc. All rights reserved. All specifications are subject to change without notice.

Part No.0161920SBY
Rev. E 06/12/19

H-100 CONTROL PANEL

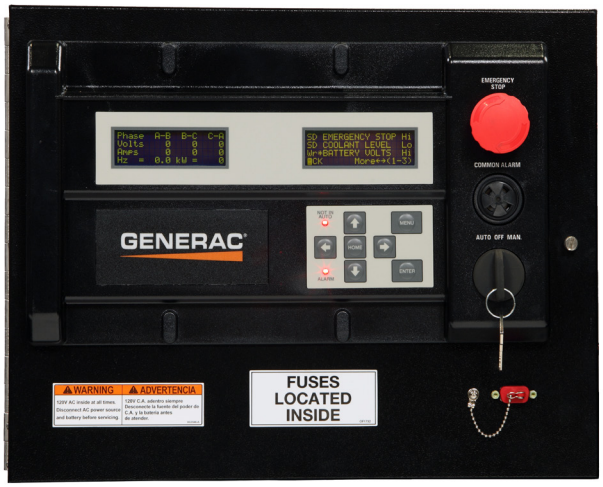

The Quiet-Test™ H-100 Control Panel is a digital microprocessor electronic controller that integrates all engine and transfer switch functions into a single control system.

- Digital Controls for All Saftey Shutdowns
- Isochronous Governor Control
- Digital 3 Phase Sensing Voltage Regulator
- Sealed Digital Circuit Board
- Mates with HTS Transfer Switch and Any 2-wire Start ATS
- Alarm and Event Logging
- Built-in Diagnostics
- Internal PLC

Features

- Two 4-line x 20 Displays
- Full System Status
- 3 Phase Sensing Digital Voltage Regulator
- Remote Ports
  - RS232
  - RS485
  - CANbus
- Waterproof Connections
- Built -in PLC
- Full Range Standby Operation
- Full System Status
  - 3 Phase AC Volts
  - 3 Phase Amps
  - kW
  - Power Factor
  - Reactive Power
  - Oil Pressure
  - Water Temperature
  - Water Level
  - Oil Temperature (Optional)
  - Fuel Pressure
  - Engine Speed
  - Battery Voltage
  - Alternator Frequency
  - Time
  - Date
  - Transfer Switch Status
  - Run Hours
  - Service Reminders
  - Trending
  - Fault History (Alarm Log)
  - I^2T Function for Full Generator Protection
- Shutdowns
  - Overvoltage
  - Overspeed
  - Low Oil Pressure
  - High Coolant Temperature
  - Low Coolant Level
- Remote Communications
- Configurable to NFPA 110, Level 1 or 2
- Programmable Auto Crank
- Emergency Stop
- On/Off/Manual Switch
- Not in Auto Flashing Light
- Audible Alarm for Fault Condition
- Transfer Switch Logic Communicates with HTS Transfer Switch
- Selectable Low Speed Exercise
- Temperature Range: -40° to +70°C

The generator set parameters can be manipulated and monitored without standing in front of the control panel with GenLink® software. The Generac H-100 control panel also monitors and controls transfer switch functions when used with the HTS transfer switch.

- Monitors Utility Voltage
- Monitors Generator Voltage
- Timer for Line Interrupt Delay
- Timer for Engine Warmup
- Timer for Minimum Engine Run Time
- Timer for Return to Utility Position
- Timer for Engine Cooldown
- Built-in Exerciser Timer (7 Day)
- Additional 2-wire Start Controls for Any 2-wire Transfer Switch

Part No. 0172110SBY
Rev. D 10/18/19

H-100 CONTROL PANEL

Typical Control Connection

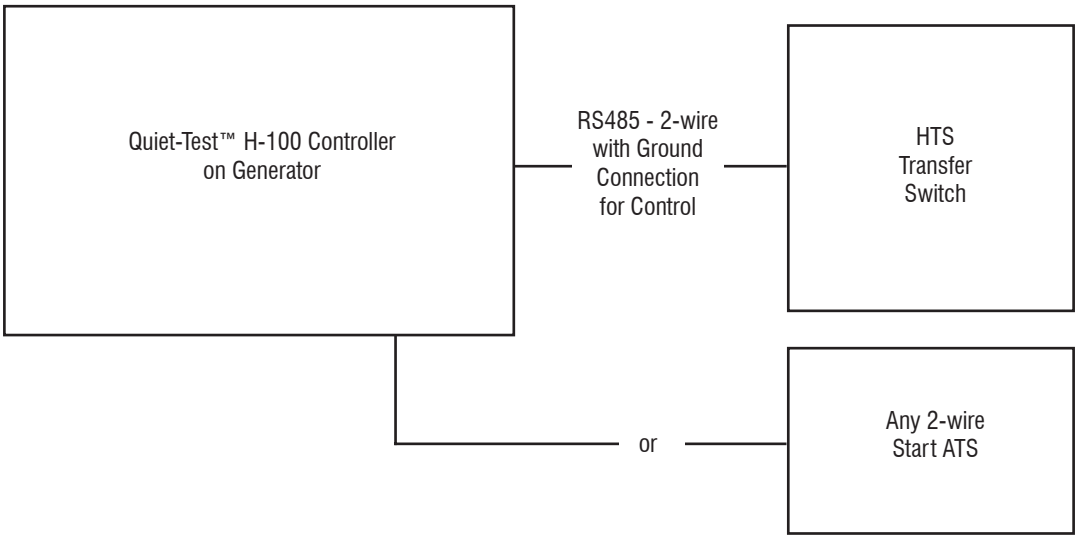

 © 2019 Generac Power Systems, Inc. All rights reserved. All specifications are subject to change without notice.

Part No. 0172110SBY
Rev. D 10/18/19

21 LIGHT REMOTE ANNUNCIATOR AND REMOTE RELAY PANEL

Model 0054650 Gray Remote Annunciator Panel without Relays
Model 0054660 Gray Remote Relay Panel without LEDs and Keypad (Relays Only)
Model 0054640 Gray Remote Annunciator Panel with 8 Relays
Model 0056370 Tan Flush Mount Enclosure without Annunciator
Model 0066950 Gray Flush Mount Enclosure without Annunciator

Description:

The Remote Annunciator Panel provides remote monitoring and annunciation of up to 18 generator parameters using LEDs located on the annunciator keypad. It also provides two system level warnings which are System Ready and Communications OK.

The Relay Panel has up to 8 selectable functions on form A relays; multiple relay panels can be connected for all 18 generator parameters.

The specific faults can be selected using either the DIP switches located on the annunciator circuit board or through a computer via the RS232 connection on the circuit board. All relays are energized on power up and open during a fault condition.

Communication is via a RS485 serial data link and power is supplied by the generator battery (+12 VDC or +24 VDC).

The Remote Annunciator Panel complies with NFPA 99 and NFPA 110.

Environmental Specifications:

Operating Temperature	-25 ºC to 60 ºC
Humidity	0 to 95% Non-Condensing
Power Supply	Generator Battery, +12 or +24 Volts DC
Power Usage	6 WattsTypical
Communication Line	RS485 Fully Isolated Twisted Pair Cable with Shield
Maximum Cable Length	4,000 ft
Relay Output	One NO Contact (Energized when Annunciator is Powered and No Faults are Present)
Relay Contact Rating	30 VDC, 1 A
Enclosure Rating	NEMA 1
Alarm Horn (Remote Annunciator Panels Only)	90 dB @ 10 cm

21 LIGHT REMOTE ANNUNCIATOR AND REMOTE RELAY PANEL

Function	Color	Alarm	Latched
Pre-Low Oil Pressure	Yellow	Yes	Yes
Pre-High Water Temperature	Yellow	Yes	Yes
Pre-Low Water Temperature	Yellow	Yes	Yes
Pre-Low Fuel	Yellow	Yes	Yes
Battery Charge AC Fail	Yellow	Yes	No
Low Battery Voltage	Yellow	Yes	No
High Battery Voltage	Yellow	No	No
Not in Auto	Red	Yes	No
RPM Sensor Loss	Red	Yes	Yes
Overcrank	Red	Yes	Yes
Overspeed	Red	Yes	Yes
Low Oil Pressure	Red	Yes	Yes
High Water Temperature	Red	Yes	Yes
Low Water Level	Red	Yes	Yes
Emergency Stop	Red	Yes	No
Gen Running	Yellow	No	No
Gen Power (ATS)	Yellow	No	No
Line Power (ATS)	Green	No	No
Systems Ready	Green	Yes	No
Communications OK	Green	Yes	No
Spare	Green	No	No

Spare Keypad Switch can be used to implement a remote start function (Model 0054640 only).

Surface Mount Annunciator

The 21 Light Annunciator can mount to a flat surface with connections through the 0.812 inch diameter knockout on the back surface or through 0.812 inch diameter knockouts on sides as shown.

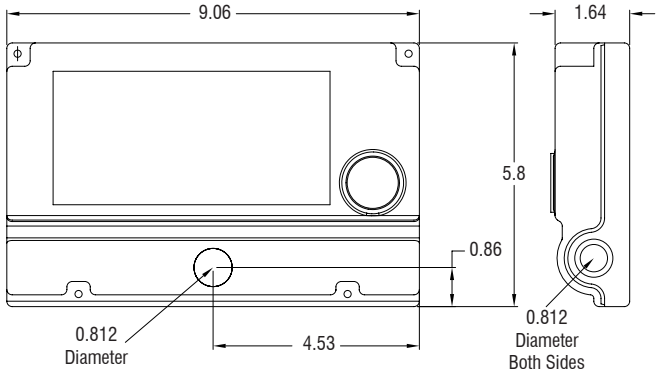

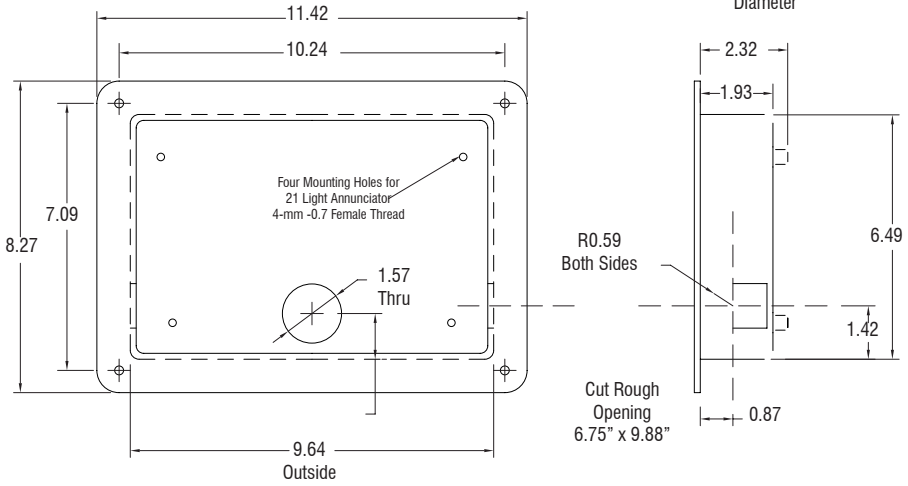

Flush Mount Annunciator

This Flush Mount Box is recessed into the wall opening and the surface mount annunciator mounts to the (4) 4 mm screw holes on the back surface. After wire connections are made the front annunciator cover is attached.

Dimensions are in inches.

Generac Power Systems, Inc. | P.O. Box 8 | Waukesha, WI 53187
P: (262) 544-4811 © 2019 Generac Power Systems, Inc. All rights reserved. All specifications are subject to change without notice.

Part No. 0604160SSD
Rev. E 06/13/19

ALTERNATOR DATA SHEET
K0200124Y21

General Characteristics

Voltages (V)	208/240 and 480	Number of Leads	12
Frequency (Hz)	60	Winding Type	Reconnectable
Phases	3	Air Flow (cfm)	1,660
Speed (rpm)	1,800	Total Harmonic Distortion (%)	<5
Excitation System	PMG	Largest Single Harmonic Value (%)	<3.5
Insulation Class	H	Telephone Interference Factor (TIF)	<50
Winding Pitch	2/3	Reference Part Number	0L3717E01R

Ratings at 0.8 pf based on 40˚C Ambient

Voltage (V)	80˚C Rise		105˚C Rise		120˚C Rise		150˚C Rise	
	kW	kVA	kW	kVA	kW	kVA	kW	kVA
208/240	152	190	182	227	200	250	214	267
480	152	190	182	227	200	250	214	267

Base Data at 480V, 250 kVA, 1800 RPM, 60 Hz, 3 Phase

Description	Value
Stator Resistance, Line to Line, High Wye Connection (Ω)	0.0151
Rotor Resistance (Ω)	1.0800
Exciter Stator Resistance - PMG (Ω)	6.4250
Exciter Rotor Resistance - PMG (Ω)	0.2060
Excitation Winding Resistance -PMG (Ω)	1.2824
Xd, Direct Axis Synchronous Reactance (p.u.)	3.360
X2, Negative Sequence Reactance (p.u.)	0.230
X0, Zero Sequence Reactance (p.u.)	0.080
X'd, Direct Axis Transient Reactance (p.u.)	0.190
X"d, Direct Axis Subtransient Reactance (p.u.)	0.170
Xq, Quadrature Axis Synchronous Reactance (p.u.)	1.610
T'd, Direct Axis Transient Short Circuit Time Constant (s)	0.103

Description	Value
T"d, Direct Axis Subtransient Short Circuit Time Constant (s)	0.016
T'do, Direct Axis Transient Open Circuit Time Constant (s)	2.245
Ta, Short Circuit Time Constant of Armature Winding (s)	0.028
Phase Sequence CCW-NDE	T1, T2, T3
Voltage Balance, L-L or L-N (%)	2.5
Deviation Factor (%)	< 7
High Wye Connection, Sustained 3-Phase Short Circuit Current (%) - PMG only	300
X/R	11
Short Circuit Ratio	0.53
Heat Rejection (BTU/hr) - 100% Rated Load, 480V, 0.8pf, 120°C Temp. Rise	87,807

Reference: Mil-STD-705B
All Ratings are Nominal

Generac Power Systems, Inc. | P.O. Box 8 | Waukesha, WI 53187
P: (262) 544-4811 © 2018 Generac Power Systems, Inc. All rights reserved. All specifications are subject to change without notice.

Bulletin No. 0182630SSD
Rev. D 04/11/18

ALTERNATOR DATA SHEET
K0200124Y21

sKVA

	10%	15%	20%	25%	30%	35%
480 V @ 0.3PF	116	175	246	324	428	552
480 V @ 0.6PF	134	200	286	367	478	589
208/240 V @ 0.3PF	89	132	185	244	325	396
208/240 V @ 0.6PF	99	151	212	275	361	437

Efficiencies

	480 @ 0.8 PF	480 @ 1.0 PF	208/240 @ 0.8PF	208/240 @ 1.0 PF
20% Rated Power*	79.2	80.3	81.7	82.5
40% Rated Power*	85.5	87.1	86.7	88.2
60% Rated Power*	88.2	90.4	88.6	90.6
80% Rated Power*	88.8	91.6	88.7	91.2
100% Rated Power*	88.6	92.1	88.1	91.2

*Rated Power value is rating kW at 120°C Winding Temp Rise and 0.8pf

LOG LOG Decrement Curve

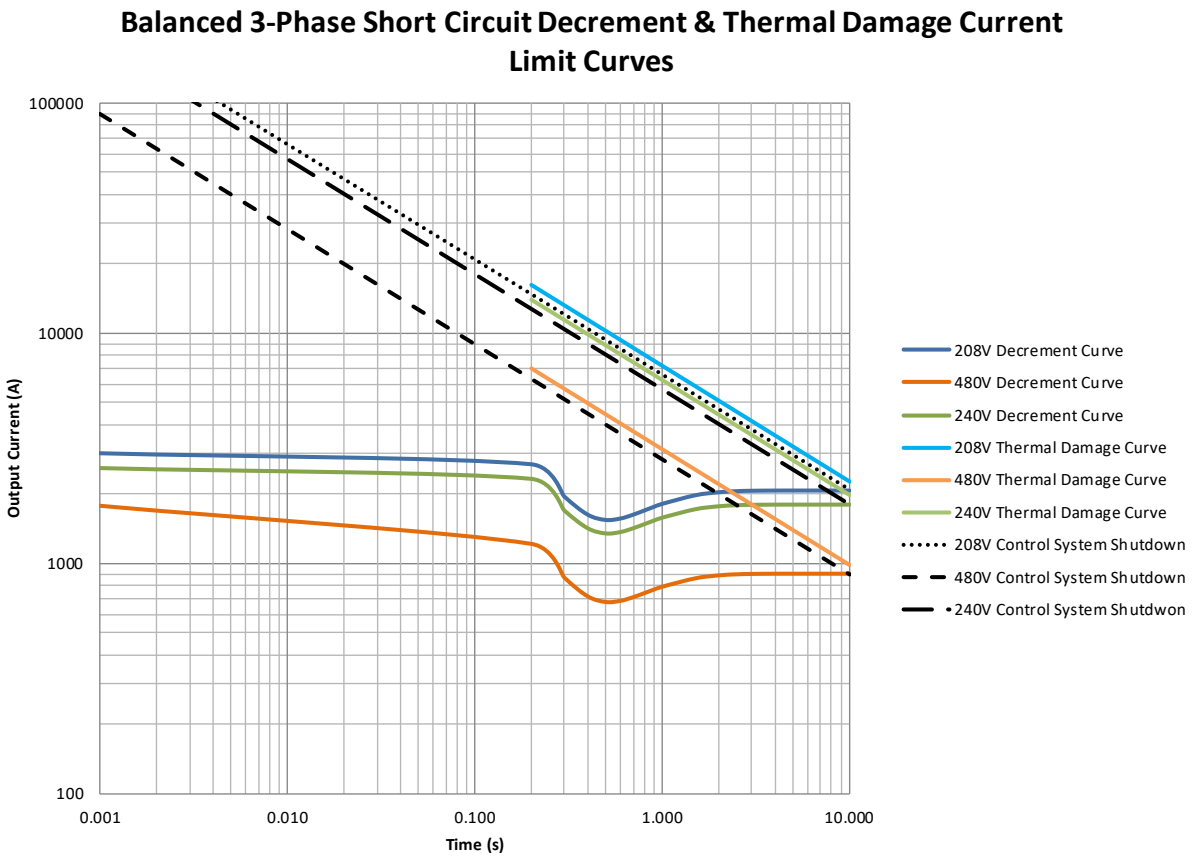

 © 2018 Generac Power Systems, Inc. All rights reserved. All specifications are subject to change without notice.

GENprotect ™
Seamless Protection for Industrial Power Generators

GENprotect Operation

The design choice of an onsite power system using a Generac Industrial Power Generator assures your emergency power source is protected from unexpected power distribution faults. Typically, a generator will include some type of over-current device, such as a circuit breaker, or be protected by inherent design with the controller protecting the alternator through a protection algorithm. Generac's GENprotect generator protection system monitors the system current output and protects the alternator with extended security against fault scenarios that could occur within the site's downstream distribution system.

It is a common misconception that the alternator's main circuit breaker protects the alternator from a short circuit event. The main output breaker protects the cabling and provides a convenient disconnect. The characteristic trip curve for the industry standard thermal magnetic breaker (MCCB, molded case thermal magnetic or solid state) does not coordinate with the thermal damage limitation for an on-site generator. If circuit breakers are used for generator protection, a solid-state circuit breaker with full adjustments (Long Time, Short Time and Instantaneous, LSI) is required to coordinate the breaker protection curve within the generator thermal damage curve. Historically, this limitation was often accepted in system design since failures of the main generator feeder are extremely rare. Most short circuit events happen at a branch circuit, equipment level, where the fault is easily cleared by the smaller down stream breakers.

Given the mission critical nature of today's back-up power applications, it is more desirable to protect the system against even relatively rare failure modes. As generator controllers have become more powerful it is feasible for manufactures to supply coordinated short circuit protection integral to the generator control system, negating the need for a main-line circuit breaker.

Generac's GENprotect alternator protection algorithm monitors the generator output. If this monitoring senses short circuit current in excess of rated amps, GENprotect steps in to provide a controlled and safe approach to breaker coordination and alternator protection. GENprotect first limits the alternator short circuit current level to 300%. By limiting the available fault current, GENprotect extends the time the alternator can maintain fault current resulting in consistent breaker coordination. Without this functionality a line to neutral fault may be at 800% of rated current and need to be cleared within 1.4 seconds. The second function GENprotect performs is I2T thermal protection for the alternator. Since a short circuit event can heat the alternator so rapidly, it is not possible to protect the alternator by monitoring temperature. Instead GENprotect calculates the heat energy of the fault current. When this energy reaches the limits of NEMA MG1, GENprotect trips the generator off-line. This configuration ensures the alternator is protected and the power system is ensured 10 seconds of 300% fault current for breaker coordination.

DESCRIPTION

- GENprotect is an alternator protection algorithm approved by UL.
- Protects alternator from damage due to shorts and electrical faults.
- Provides breaker coordination and alternator protection.
- Allows for use of multiple circuit breaker choices, including "no" breaker.

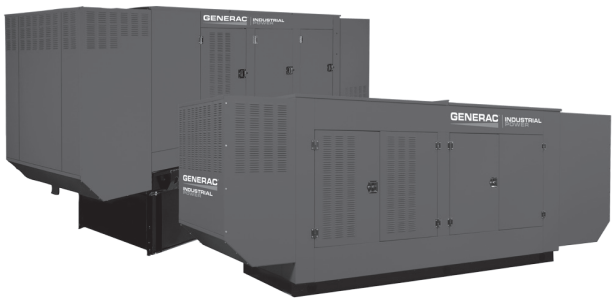

GENprotect ™
Seamless Protection for Industrial Power Generators

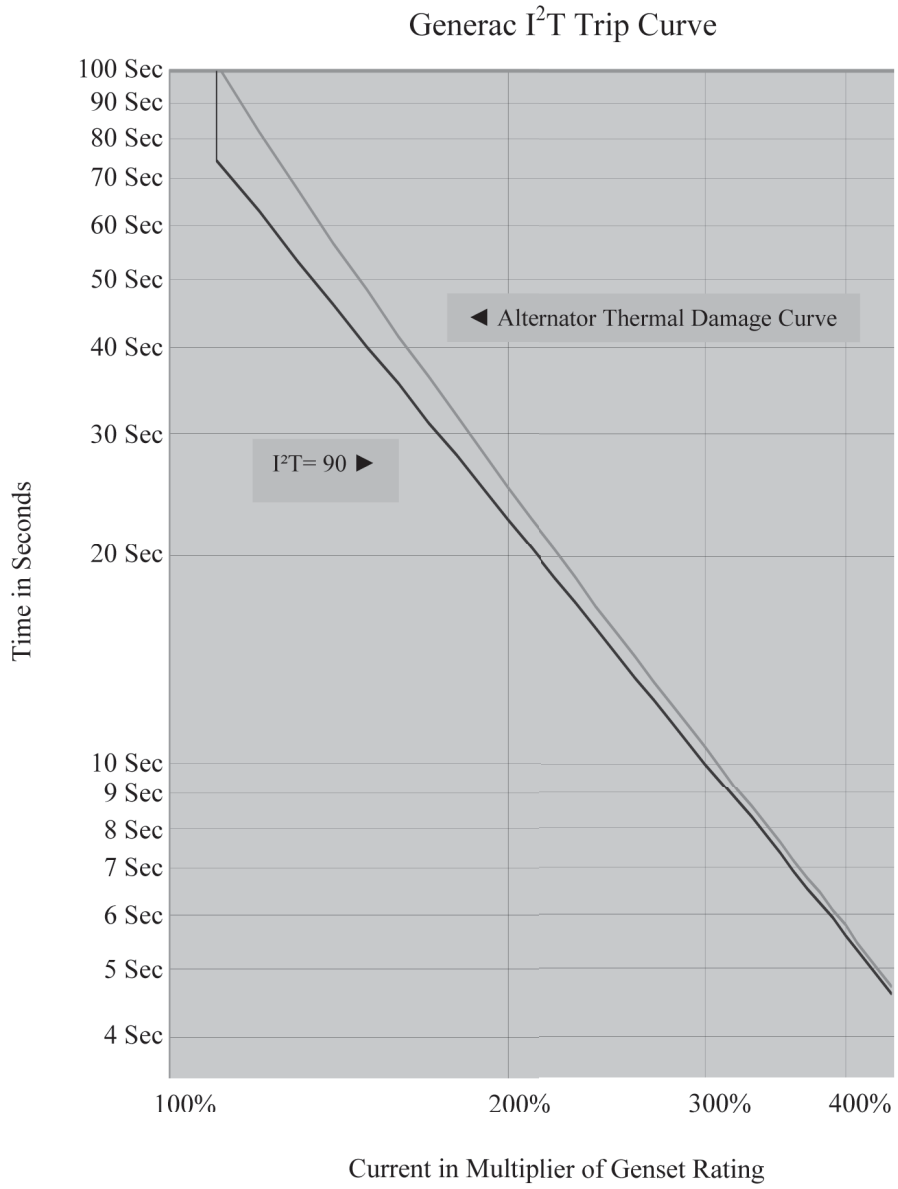

The above Figure shows the Generac GENprotect thermal protection curve for use in protection and coordination studies. The alternator Thermal Damage Curve is shown just to the right of the GENprotect protection curve. If the alternator load is greater than the thermal damage protection curve for the alternator, the generator set will trip off-line. For example, an overload current of 110% for 75 seconds causes an overload alarm and will trip the generator off-line, shutting down the engine. GENprotect will provide generator protection over a full range of time and current, from instantaneous faults to overloads lasting several minutes. An advantage of GENprotect over a MCCB is that GENprotect allows for downstream breakers to clear faults without tripping the generator off-line, providing selective coordination with the first level of downstream breakers.

 © 2019 Generac Power Systems, Inc. All rights reserved. All specifications are subject to change without notice.

INDUSTRIAL GENSET - BATTERY INDEX

• Warranty by Exide Corp. • Exide e-mail: tbgna@exide.com • 800-782-7848 National Hot line

INDUSTRIAL SPARK-IGNITED GENSETS - AVAILABLE BATTERIES

Engine	System Voltage	Battery Quantity	GENERAC PART # 058208 (Group 24F)	077483 (Group 26)	058665 (Group 27F)	061119 (Group 31)	061104 (Group 8D)	BT0015A02 (Group 8D)
G2.4	12	1		X				
G4.5	12	1			X	X		
G9.0	12	1			X	X		
G14.2	24	2					X	
G21.9	24	2					X	
G25.8	24	2					X	
G33.9	24	4					X	
G49.0	24	4					X	X

INDUSTRIAL DIESEL GENSETS - AVAILABLE BATTERIES

Engine	System Voltage	Battery Quantity	GENERAC PART # 058665 (Group 27F)	061119 (Group 31)	061104/BT0015A00 (Group 8D)	BT0015A02 (Group 8D)
D2.2 Perkins	12	1	X	X		
D2.4 Generac	12	1	X	X		
D3.4 Generac	12	1	X	X		
D4.5 FPT	12	1		X		
D6.7 FPT 100, 130kW	12	1 or 2†		X		
D6.7 FPT 150, 175kW	12	2†		X		
D8.7 FPT	24	2		X		
D10.3 FPT	24	2		X	X	
D12.9 FPT	24	2		X	X	
D12.5 Perkins	24	2			X	
D15.2 Perkins	24	2			X	
D16.0 Volvo	24	2		X	X	
D18.1 Perkins	24	2			X	
D33.9 MHI	24	2			X	X
D37.1 MHI	24	4			X	X
D49.0 MHI	24	4			X	X
D65.4 MHI	24	4			X	X

Part Number	Group Number*	Nominal CCA @ 0° F	DIMENSIONS (in) NOMINAL L	W	H
058208	24F	525	6.75	10.63	9.00
077483	26	525	6.75	8.25	7.75
058665	27F	700	6.75	12.50	9.00
061119	31	925	6.75	13.00	9.40
061104/ BT0015A00	8D	1,155	11.00	20.80	10.00
BT0015A02	8D	1,300	11.00	20.80	10.00

All batteries are 12V, 6 cell construction, lead calcium type.
For 24V systems, batteries are wired in series.

X Battery available with electrolyte and installed in genset.
† Single or dual-paralleled battery options are available on 100 and 130kW. Single-battery option not available on 150 and 175kW.
* BCI Group Size reference.

Generac Power Systems, Inc. | P.O. Box 8 | Waukesha, WI 53187
P: (262) 544-4811 © 2020 Generac Power Systems, Inc. All rights reserved. All specifications are subject to change without notice.

Part No. 0161970SBY
Rev. L 8/24/20

RhinoCoat™

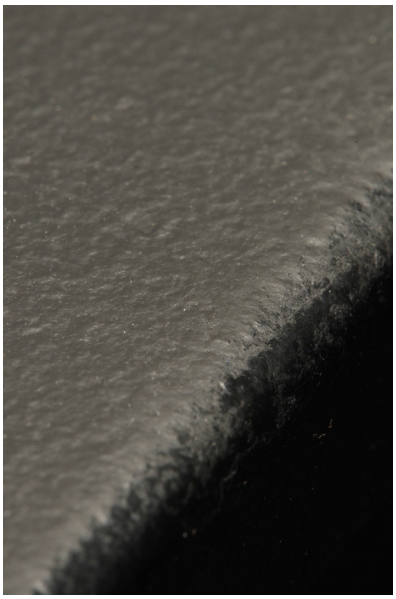

Generac's RhinoCoat™ finish system provides superior durability as a standard for all Generac Industrial enclosures, tanks and frames.*

Testing Standards

Generac's RhinoCoat™ finished surfaces are subjected to numerous tests. These include:

- ASTM D - 1186 - 87.....2.5+ MIL Paint Thickness
- ASTM D - 3363 - 92a.....Adequate Material Hardness
- ASTM D 522 - B.....Resistant to Cracking
- ASTM D 3359 - B.....Exceptional Adhesion
- ASTM B117 D 1654.....Resistant to Salt Water Corrosion
- ASTM D1735 D 1654.....Resistant to Humidity
- ASTM 2794 93 (2004).....Exceptional Impact Resistance
- SAEJ1690 - UV Specifications.....UV Protection

In addition to the testing standards above, Generac adds the following test requirements more specific to generator applications:

- Resistant to Typical Oils
- Resistant to Typical Fuels
- Resistant to Typical Antifreeze
- Resistant to Distilled Water

Primary Codes and Standards

*RhinoCoat™ powder coat paint is durable and corrosion resistant however it is not a rust preventative. Generac pretreats all powder coated parts to assist with resistance to corrosion.

 © 2019 Generac Power Systems, Inc. All rights reserved. All specifications are subject to change without notice.

EATON CIRCUIT BREAKER DATA
Standard (80% Rated) Thermal-Magnetic

AMPS	VOLTS	ACCESSORIES	EATON PART NUMBER	SERIES	FRAME	GENERAC PART NUMBER
15	600	No Accessories	FG3015	C	F-Frame	0H9294TA00
		Shunt Trip and Aux. Contacts	FG3015A12S03			0H9294TAB0
20		No Accessories	FG3020			0H9295TA00
		Shunt Trip and Aux. Contacts	FG3020A12S03			0H9295TAB0
25		No Accessories	FG3025			0J0248TA00
		Shunt Trip and Aux. Contacts	FG3025A12S03			0J0248TAB0
30		No Accessories	FG3030			0H9296TA00
		Shunt Trip and Aux. Contacts	FG3030A12S03			0H9296TAB0
35		No Accessories	FG3035			0H9297TA00
		Shunt Trip and Aux. Contacts	FG3035A12S03			0H9297TAB0
40		No Accessories	FG3040			0H9298TA00
		Shunt Trip and Aux. Contacts	FG3040A12S03			0H9298TAB0
45		No Accessories	FG3045			0H9299TA00
		Shunt Trip and Aux. Contacts	FG3045A12S03			0H9299TAB0
50		No Accessories	FG3050			0H9300TA00
		Shunt Trip and Aux. Contacts	FG3050A12S03			0H9300TAB0
60		No Accessories	FG3060			0H9301TA00
		Shunt Trip and Aux. Contacts	FG3060A12S03			0H9301TAB0
70		No Accessories	FG3070			0H9302TA00
		Shunt Trip and Aux. Contacts	FG3070A12S03			0H9302TAB0
80		No Accessories	FG3080			0J0841TA00
		Shunt Trip and Aux. Contacts	FG3080A12S03			0J0841TAB0
90		No Accessories	FG3090			0J0837TA00
		Shunt Trip and Aux. Contacts	FG3090A12S03			0J0837TAB0
100		No Accessories	FG30100			0H9314TA00
		Shunt Trip and Aux. Contacts	FG3100A12S03			0H9314TAB0
125		No Accessories	FG30125			0J0231TA00
		Shunt Trip and Aux. Contacts	FG3125A12S03			0J0231TAB0
150		No Accessories	FG30150			0H9315TA00
		Shunt Trip and Aux. Contacts	FG3150A12S03			0H9315TAB0
175		No Accessories	FG30175			0H9316TA00
		Shunt Trip and Aux. Contacts	FG3175A12S03			0H9316TAB0
200		No Accessories	FG30200			0J0232TA00
		Shunt Trip and Aux. Contacts	FG3200A12S03			0J0232TAB0
225		No Accessories	FG3225			0H9317TA00
		Shunt Trip and Aux. Contacts	FG3225A12S03			0H9317TAB0
250		No Accessories	JG3250		J-Frame	0H9318TA00
		Shunt Trip and Aux. Contacts	JG3250A12S43			0H9318TAB0
300		No Accessories	KG3300		K-Frame	0H9319TA00
		Shunt Trip and Aux. Contacts	KG3300A12S43			0H9319TAB0

EATON CIRCUIT BREAKER DATA
Standard (80% Rated) Thermal-Magnetic

AMPS	VOLTS	ACCESSORIES	EATON PART NUMBER	SERIES	FRAME	GENERAC PART NUMBER
350	600	No Accessories	KG3350	C	K-Frame	0H9320TA00
		Shunt Trip and Aux. Contacts	KG3350A12S43			0H9320TAB0
400		No Accessories	KG3400			0H9321TA00
		Shunt Trip and Aux. Contacts	KG3400A12S43			0H9321TAB0
450		No Accessories	LG3450		L-Frame	0H9322TA00
		Shunt Trip and Aux. Contacts	LG3450A12S03			0H9322TAB0
500		No Accessories	LG3500			0H9323TA00
		Shunt Trip and Aux. Contacts	LG3500A12S03			0H9323TAB0
600		No Accessories	LG3600			0H9324TA00
		Shunt Trip and Aux. Contacts	LG3600A12S03			0H9324TAB0
700		No Accessories	MDL3700		M-Frame	0H9325TA00
		Shunt Trip and Aux. Contacts	MDL3700A06S02			0H9325TAB0
800		No Accessories	MDL3800			0H9326TA00
		Shunt Trip and Aux. Contacts	MDL3800A06S02			0H9326TAB0
900*		No Accessories	NG3900		N-Frame	0H9327TA00
		Shunt Trip and Aux. Contacts	NG3900A12S03			0H9327TAB0
1,000*		No Accessories	NG31000			0H9328TA00
		Shunt Trip and Aux. Contacts	NG31000A12S03			0H9328TAB0
1,200*		No Accessories	NG31200			0H9329TA00
		Shunt Trip and Aux. Contacts	NG31200A12S03			0H9329TAB0
1,400*		No Accessories	RGH316033MY22	G	RG-Frame	0H9360EAN0
		Shunt Trip and Aux. Contacts	RGH316033MA12S21Y22			0H9360EANB
1,600*		No Accessories	RGH316033MY22			0H9361EAN0
		Shunt Trip and Aux. Contacts	RGH316033MA12S21Y22			0H9361EANB
2,000*		No Accessories	RGH320033M			0H9367EAN0
		Shunt Trip and Aux. Contacts	RGH320033MA12S21			0H9367EANB
2,500*		No Accessories	RGH325033M			0H9368EAN0
		Shunt Trip and Aux. Contacts	RGH325033MA12S21			0H9368EANB

*LS-type electronic trip breaker equipped with RMS 310+ trip unit.

 © 2020 Generac Power Systems, Inc. All rights reserved. All specifications are subject to change without notice.

BATTERY CHARGER
2.5 amp and 10 amp

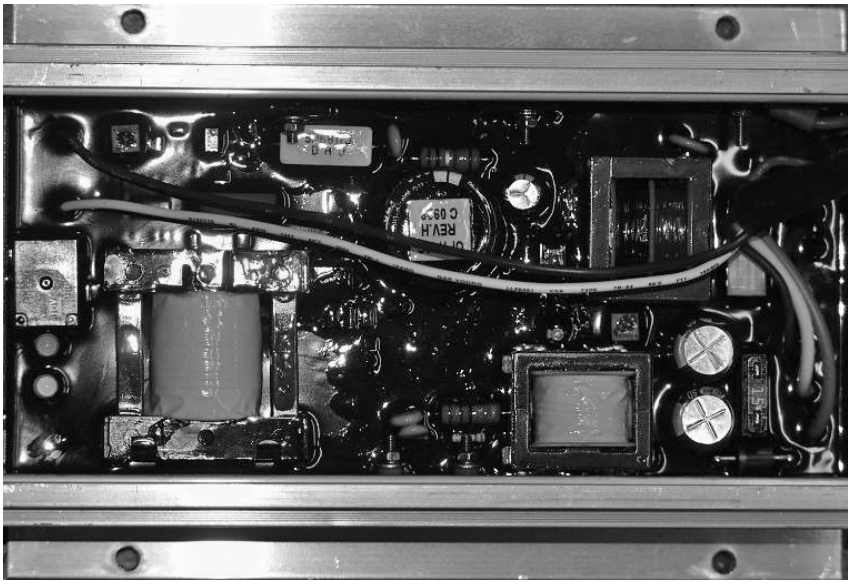

Battery charger shown from inside of control panel enclosure.
Connections are made via an attached harness.

The Generac 2.5 amp 12 volt and 10 amp 12/24 volt battery chargers are designed to work with Generac Industrial Controls to provide the ultimate in automatic battery voltage maintenance.

The 2.5 amp charger is self-regulating and produces instantaneous output current adjustments to keep the battery charged to an optimum level. Battery voltage is read on the control panel digital display.

The 10 amp charger has automatic float and equalize control. It precisely monitors the battery's voltage and automatically activates the correct charging mode. The charge rate is limited and controlled to efficiently and safely maintain ideal battery levels under varying conditions.

The equalize system uses a control circuit to limit charging current to 10 amps. When battery voltage drops below a preset level, charging current increases to 5 amps and then to the 10 amp charge rate if needed. When the battery reaches maximum charge, the charger switches to float mode to supply just enough current to maintain the battery at or above 13/26 volts. Battery voltage and charging current are read at the control panel digital display.

Specifications	2.5A	10A
Nominal Input	120 VAC	120 VAC
Operating AC Line Voltage Range	108 to 132 VAC	108 to 132 VAC
Input AC Line Frequency	50/60 Hz	50/60 Hz
Battery Fuse	N/A	15 A
Nominal Charge Rate	2.5 A	10 A
Equalize Voltage	N/A	13.8/27.6 V
Float Voltage	13.4 V	13.0/26.0 V
Current @ Equalize to Float Transition	N/A	5 A
Battery Under-voltage shutdown	N/A	11/22 V
LED Indicators	No	Yes
AC Line Voltage	N/A	Green LED
Battery Connected and Charging	N/A	Yellow LED
Battery Current Drain	30 mA	30 mA
AC Line Connection	Connector Plug	Connector Plug
Battery Connection	Connector Plug	Connector Plug
Control Connection		AC Power Fail Form Relay Form C 2 A Rating
CUL Recognized	Yes	Yes
NFPA 110 Compliant	No	Yes
AGM Compatible	No	Yes
UL1236	No	Yes
CSA 22.2 No. 107	No	Yes

Generac Power Systems, Inc. | P.O. Box 8 | Waukesha, WI 53187
P: (262) 544-4811 © 2019 Generac Power Systems, Inc. All rights reserved. All specifications are subject to change without notice.

Part No.0191900SBY
Rev. E 08/12/19

EATON CIRCUIT BREAKER DATA LUG INFORMATION

Eaton Series C Circuit Breaker Lugs

			Standard Lug	
Amps	Series	Frame	Eaton Part #	Wire (QTY) Size
15-70	C	G	-	(1) #10-1/0
15-100	C	F	3T100FB	(1) #14-1/0
125-200	C	F	3TA225FD	(1) #4-4/0
225	C	F	3TA225FDK	(1) #6-300MCM
250	C	J	TA250KB	(1) #4-350MCM
300	C	K	TA350K	(1) 250-500MCM
350-400	C	K	3TA400K	(2) 3/0-250MCM
450-500	C	L	TA602LD	(2) 3/0-350MCM
600	C	L	3TA603LDK	(2) 400-500MCM
700-800	C	M	TA800MA2	(3) 3/0-400MCM
900-1,000	C	N	T1200NB3	(4) 3/0-400MCM
1,200	C	N	TA1201NB1	(3) 500-750MCM

Eaton Series G Circuit Breaker Lugs

			Standard Lug	
Amps	Series	Frame	Eaton Part #	Wire (Qty) Size
50-250	G	JG	TA250FJ	(1) #8-350MCM
300-600	G	LG	3TA632LK	(2) #2-500MCM
900-1,200	G	NG	TA1201NB1	(3) 500-750MCM
1,400-1,600	G	RG	T1600RD	(4) 1-600MCM
2,000	G	RG	Lugs Not Included	
2,500	G	RG	Lugs Not Included	

 © 2019 Generac Power Systems, Inc. All rights reserved. All specifications are subject to change without notice.

CRITICAL GRADE SILENCER

SPECIFICATIONS

- 4” FLANGE INLET/OUTLET
- MATERIAL: ALUMINIZED STEEL EXCEPT WHERE NOTED
  - FINISH: HIGH HEAT BLACK PAINT
  - BODY SEAM AND TUBE JOINTS MAY BE AT RANDOM ANGULAR ROTATION
- INSERTION LOSS: 20-25 dBA
- APPROXIMATE WEIGHT: 50 LBS.

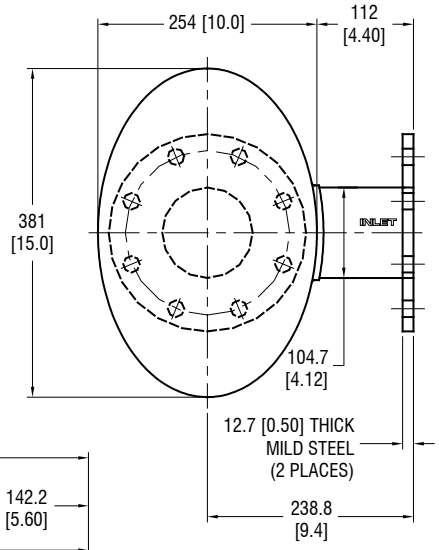

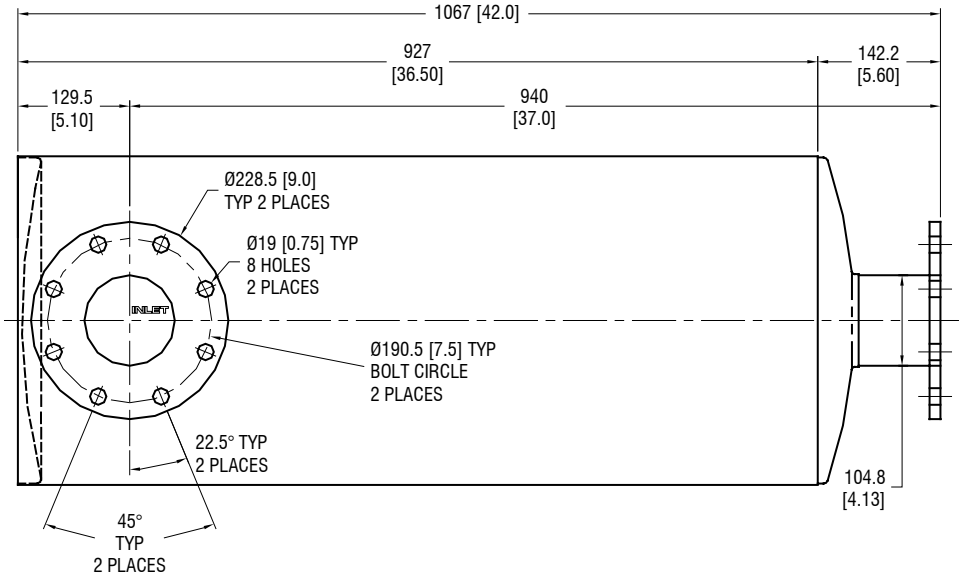

DIMENSIONS: mm [INCHES]

ENGINE

Generac Power Systems, Inc. | P.O. Box 8 | Waukesha, WI 53187
P: (262) 544-4811 © 2015 Generac Power Systems, Inc. All rights reserved. All specifications are subject to change without notice.

Part No.065801
Rev. C 07/20/15

COOLANT HEATER OPTION
1500 WATT, 240VAC

SPECIFICATIONS:

VOLTAGE: 240VAC

HEAT POWER: 1500W

FIXED THERMOSTAT: 100°-120°F

HEATING ELEMENT: INCOLOY 800

MAXIMUM PRESSURE: 90 PSI (620 kPa)

PLUG NEMA STD: 6-15P

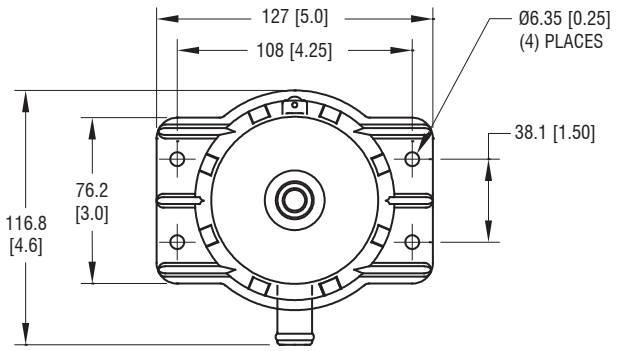

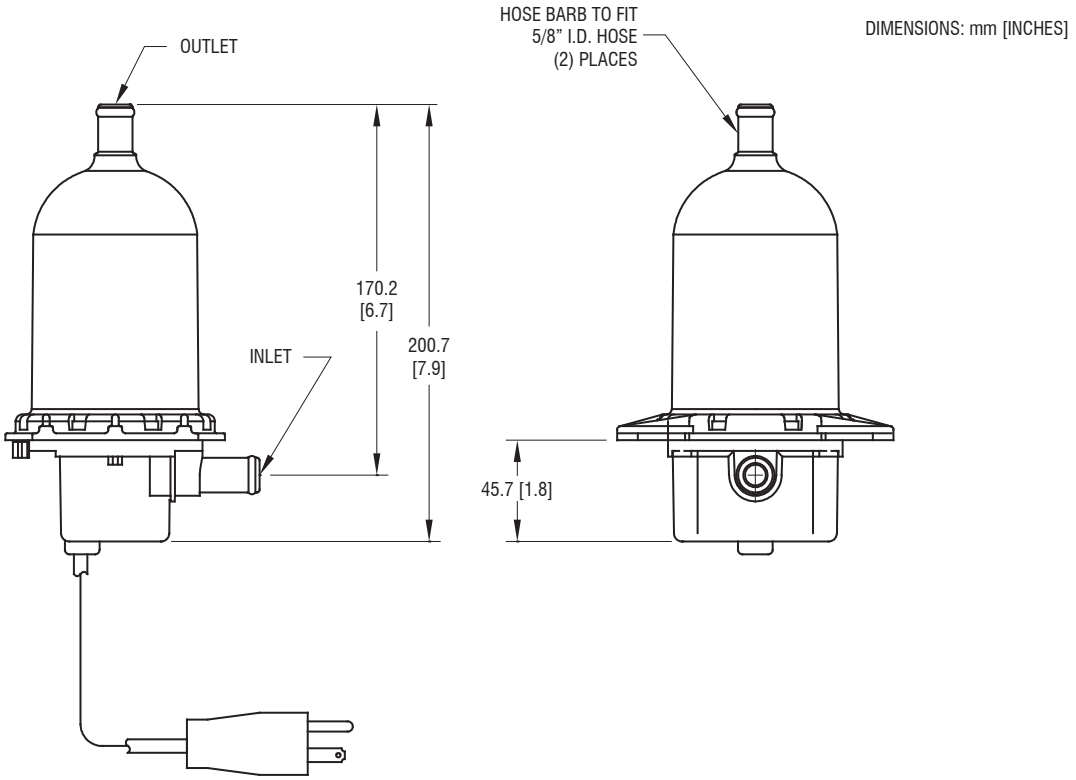

Generac Power Systems, Inc. | P.O. Box 8 | Waukesha, WI 53187
P: (262) 544-4811 © 2015 Generac Power Systems, Inc. All rights reserved. All specifications are subject to change without notice.

Part No. 084918H
05/13/15

EXHAUST FLEX, 4”

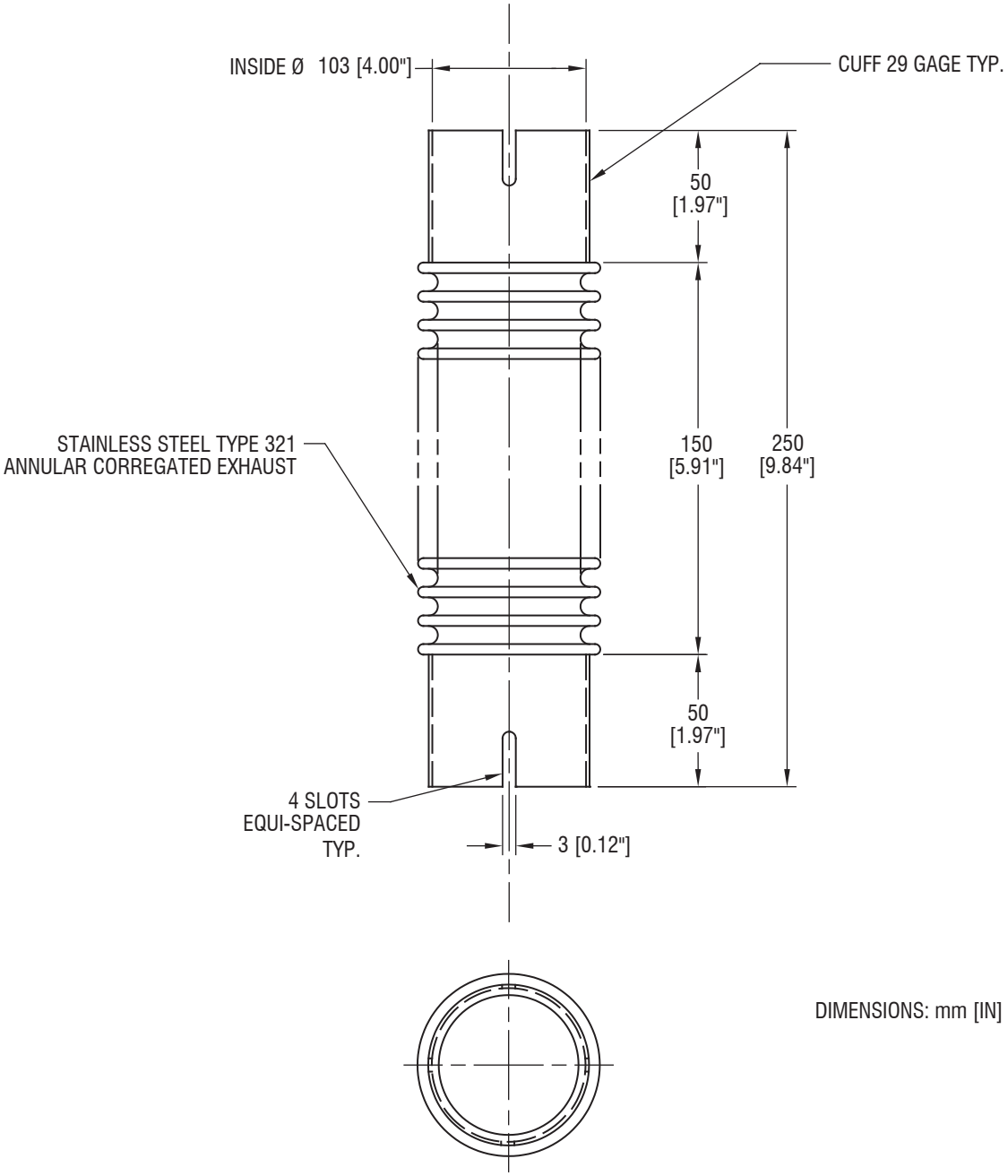

DIMENSIONS: mm [IN]

 © 2015 Generac Power Systems, Inc. All rights reserved. All specifications are subject to change without notice.

EXHAUST SYSTEMS EXPLODED VIEW
6.7L FPT, 100-175KW

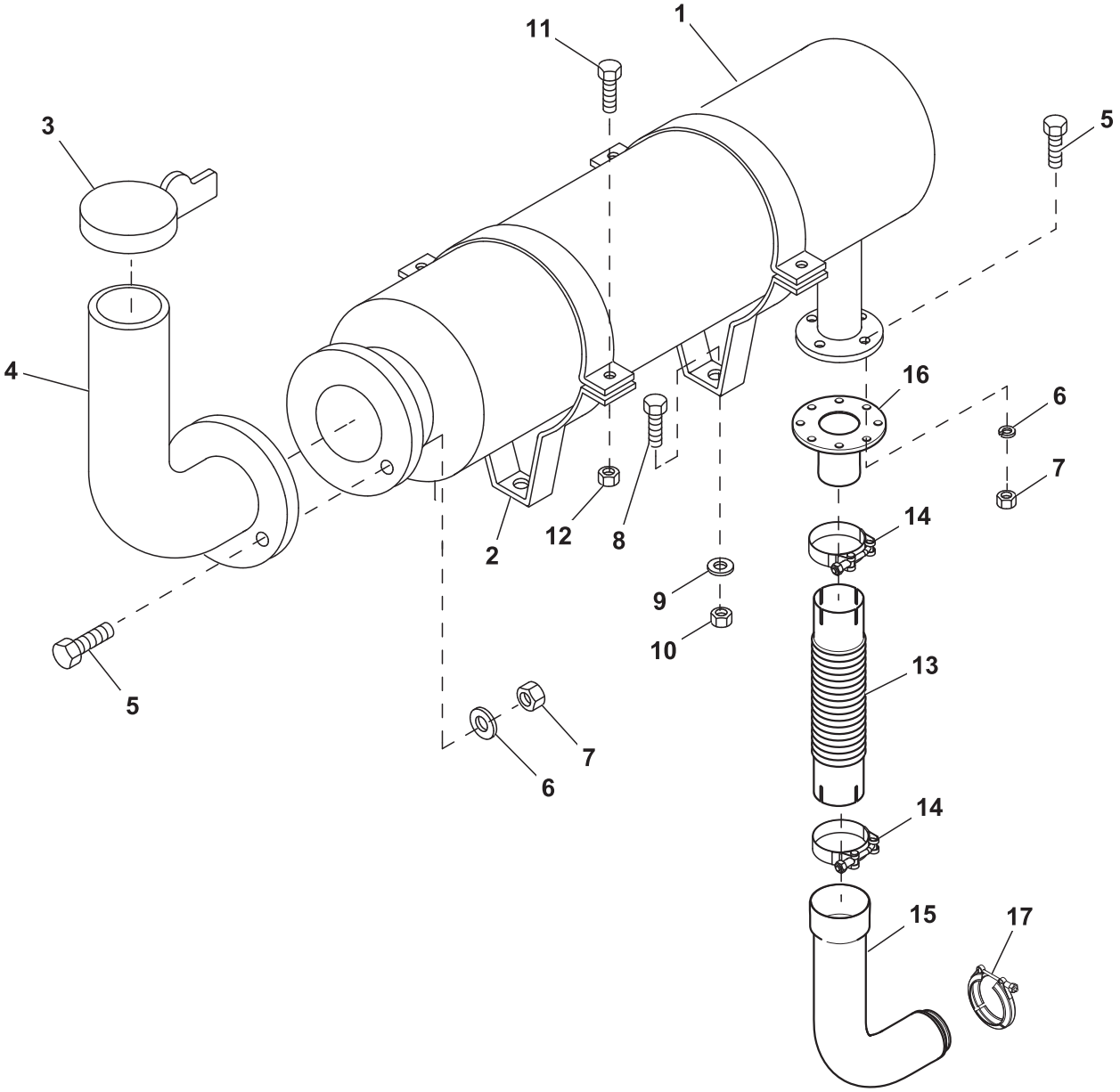

EXHAUST SYSTEMS EXPLODED VIEW
6.7L FPT, 100-175KW

ITEM	PART #	QTY.	DESCRIPTION
1	065801	1	CRIT MUFFLER 4 FLANGE
2	065802	2	MOUNTING BAND MUFFLER
3	065805	1	CAP RAIN 5.00/15.19
4	064999	1	EXH OUT EXTENSION
5	023662	16	SCREW HHC 5/8-18 X 2-1/4 G5
6	022246	16	WASHER LOCK 5/8
7	025391	16	NUT HEX JAM 5/8-18 STEEL
8	049814	4	SCREW HHC M10-1.5 X 25 G8.8
9	022131	4	WASHER FLAT 3/8-M10 ZINC
10	052859	4	NUT LOCK FL M10-1.50
11	0A1663	4	SCREW HHC 3/8-16 X 3”
12	02241	4	NUT HEX 3/8-16 STEEL
13	0A5215D	1	FLEX PIPE 4”
14	0C3433C	2	CLAMP BAND 4.0”
15	0H5071	1	EX EL ASSY OP SET 6.7L G17
16	0H5125	1	ASSY EXHAUST FLANGE D6.7 G17
(1)17	0H6348	(REF)	CLIP 6.7L G17

(1) SUPPLIED WITH ENGINE

Generac Power Systems, Inc. | P.O. Box 8 | Waukesha, WI 53187
P: (262) 544-4811 © 2015 Generac Power Systems, Inc. All rights reserved. All specifications are subject to change without notice.

Part No. 0H4314
Rev. B 05/18/11

REMOTE EMERGENCY STOP SWITCH
Break Glass, H-Panel

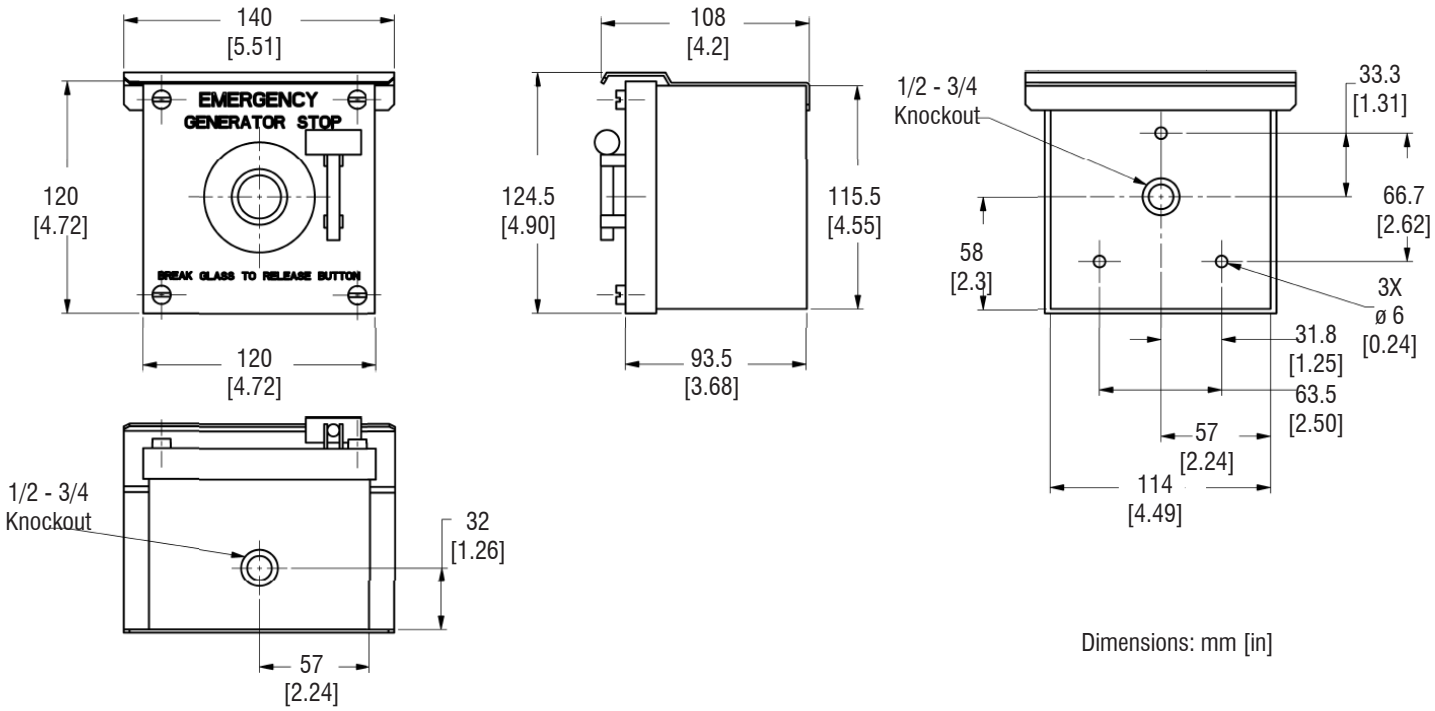

Dimensions: mm [in]

Specifications

Generac Part Number: 061129D
Surface Mount, NEMA 3R
2 Replacement Glasses
Painted Steel Enclosure
Contact Rating: 10A at 120V

Part No. 0L6262
Rev. B 07/10/19

REMOTE EMERGENCY STOP SWITCH
Break Glass, H-Panel

Wiring - H-Panel

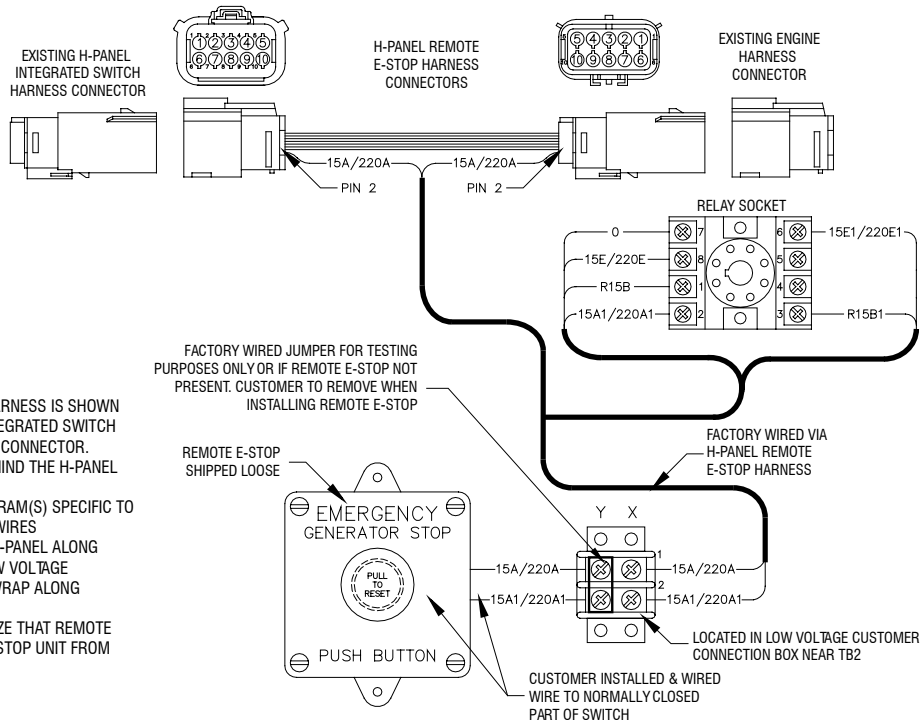

NOTES:
1) THE H-PANEL REMOTE E-STOP HARNESS IS SHOWN IN POSITION BETWEEN EXISTING INTEGRATED SWITCH CONNECTOR AND ENGINE HARNESS CONNECTOR. CONNECTION POINT IS LOCATED BEHIND THE H-PANEL HINGED COVER
2) SEE WIRING OR SCHEMATIC DIAGRAM(S) SPECIFIC TO UNIT FOR INFORMATION ON OTHER WIRES
3) FACTORY RUNS WIRING OUT OF H-PANEL ALONG ENGINE HARNESS THAT ENTERS LOW VOLTAGE CUSTOMER CONNECTION BOX. TIE WRAP ALONG HARNESS AS NEEDED.
4) THE H-PANEL WILL NOT RECOGNIZE THAT REMOTE E-STOP WAS ACTIVATED, BUT WILL STOP UNIT FROM RUNNING

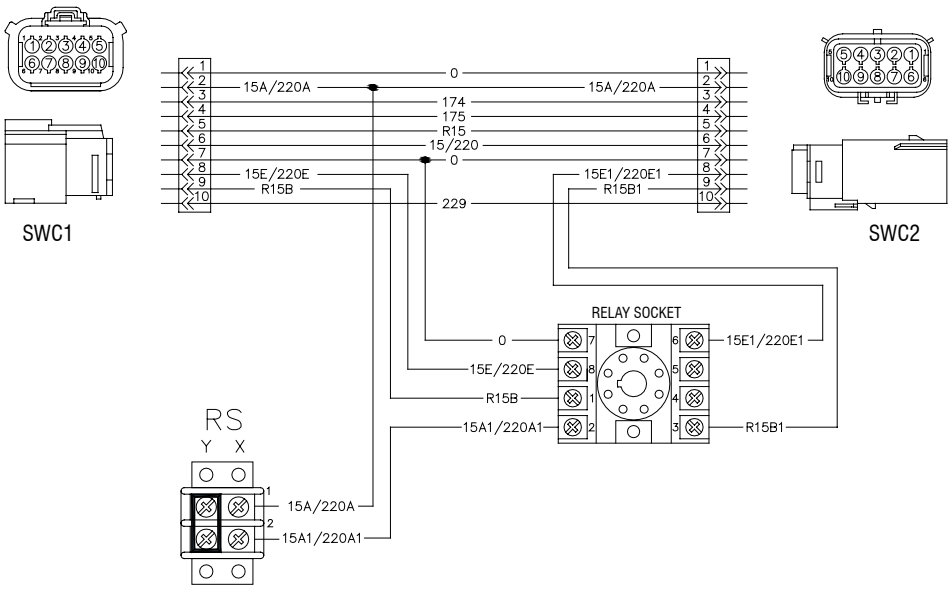

Generac Power Systems, Inc. | P.O. Box 8 | Waukesha, WI 53187
P: (262) 544-4811 © 2019 Generac Power Systems, Inc. All rights reserved. All specifications are subject to change without notice.

Part No. 0L6262
Rev. B 07/10/19

Notes:
1. CONTROL PANEL, (OPTIONAL BATTERY CHARGER INSIDE).
2. 120V, 20A GFCI & 250V, 15A OUTLET (OPTIONAL).
3. CONNECTION POINTS FOR CONTROL WIRES PROVIDED IN THE LOW VOLTAGE CONNECTION BOX (USE LOW VOLTAGE STUB-UP AREA).
4. BATTERY (12 VOLT NEGATIVE GROUND SYSTEM).
5. MAIN LINE CIRCUIT BREAKER (MLCB), AC LOAD LEADS. (DIMENSIONS MAY VARY DUE TO UNIT CONFIGURATION)
6. CENTER OF GRAVITY AND WEIGHT MAY CHANGE DUE TO UNIT OPTIONS.

7. ENGINE SERVICE CONNECTIONS:
   INLET NATURAL GAS = N/A
   INLET DIESEL = 1/2" NPT COUPLING
   RETURN DIESEL = 1/2" NPT COUPLING
   OIL DRAIN = 1/2" NPT COUPLING
   RADIATOR DRAIN = N/A
   FLEX PIPE OUTLET = 4" I.D.
   EXHAUST OUTLET = N/A

***** SEE GENERATOR SIZING GUIDE FOR FUEL PIPE SIZING TO SUIT APPLICATION *****

8. AUXILARY AC CONNECTION FOR UNIT OPTIONS ARE LOCATED IN HIGH VOLTAGE CONNECTION BOX, UNLESS AN OPTIONAL LOAD CENTER IS INSTALLED.
9. EXHAUST PIPES MAY BE ROTATED TO ALLOW MUFFLER TO POINT OUT TO THE RIGHT OR LEFT SIDE OF GENERATOR. (MAY NOT APPLY TO ALL UNITS)
10. GENERATOR SET MUST BE INSTALLED SUCH THAT FRESH COOLING AIR IS AVAILABLE AND DISCHARGE AIR FROM THE RADIATOR IS NOT RECIRCULATED.
11. BOTTOM OF GENERATOR SET MUST BE ENCLOSED TO PREVENT PEST INTRUSION AND RECIRCULATION OF DISCHARGE AIR AND/OR IMPROPER COOLING AIR FLOW.
12. INSTALL EXHAUST BLANKETS ALONG THIS LINE.
13. CONNECT THE OPEN SET EXHAUST PER NFPA 37
14. BOLTS OR STUDS USED TO MOUNT UNIT TO PAD, OR BASE TANK, SHALL BE 5/8"-11 GRADE 5. USE STANDARD SAE TORQUE SPECS. (FOR INSTALLATION OF FUEL TANK TO PAD REFER TO INSTALL DRAWING OF THE BASE TANK)

ADDITIONAL NOTES:
FOR WEIGHT AND CENTER OF GRAVITY DATA SEE NOTE 6, AND SHEET 3.

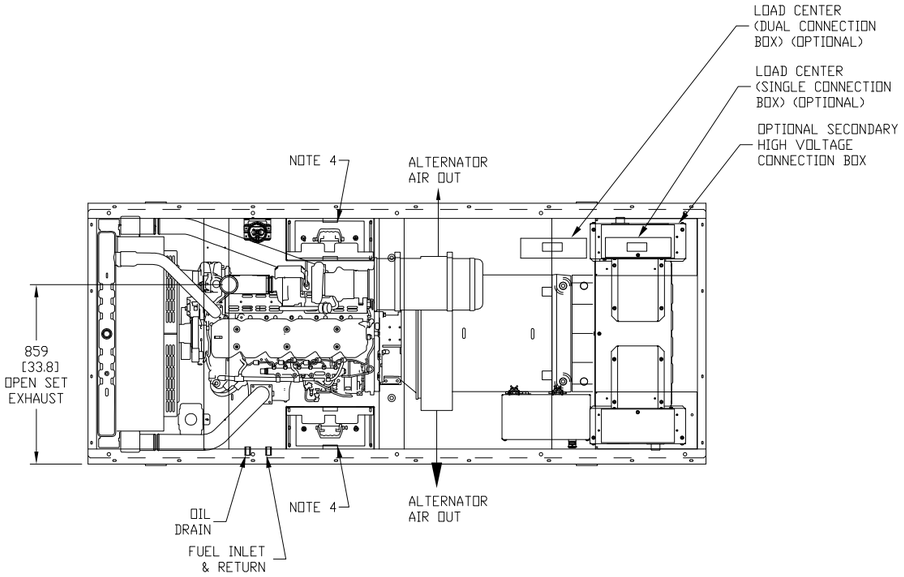

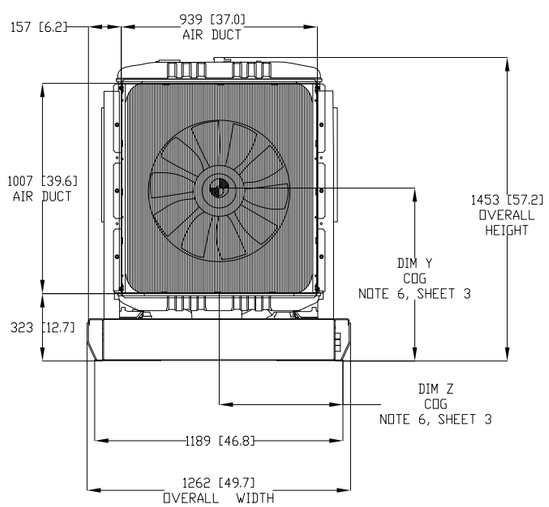

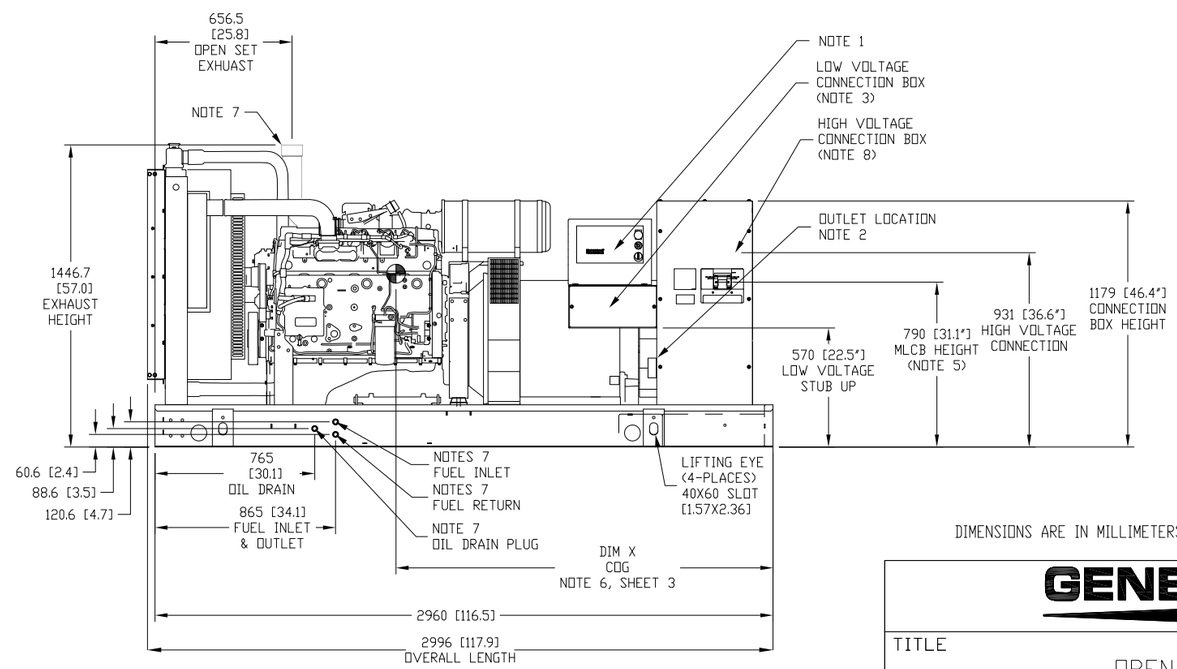

DIMENSIONS ARE IN MILLIMETERS [INCHES]

DRAWING CREATED FROM PRO/ENGINEER 3D FILE. ECO MODIFICATION TO BE APPLIED TO SOLID MODEL ONLY.

INSTALLATION DRAWING

GENERAC POWER SYSTEMS OWNS THE COPYRIGHT OF THIS DRAWING WHICH IS SUPPLIED IN CONFIDENCE AND MUST NOT BE USED FOR ANY PURPOSE OTHER THAN FOR WHICH IT IS SUPPLIED WITHOUT THE EXPRESS WRITTEN CONSENT OF GENERAC POWER SYSTEMS.
© GENERAC POWER SYSTEMS 2012

ELECTRONICALLY APPROVED
INSIDE WINDCHILL

GENERAC

TITLE
OPEN SET
D6.7L, 60HZ: SD150, PD135
SD175, PD158

ISSUE DATE: 9/30/14

SIZE	CAGE NO	DWG NO	REV
B	N/A	0J4194	J

SCALE 0.035 | WT-KG | SHEET 1 of 3

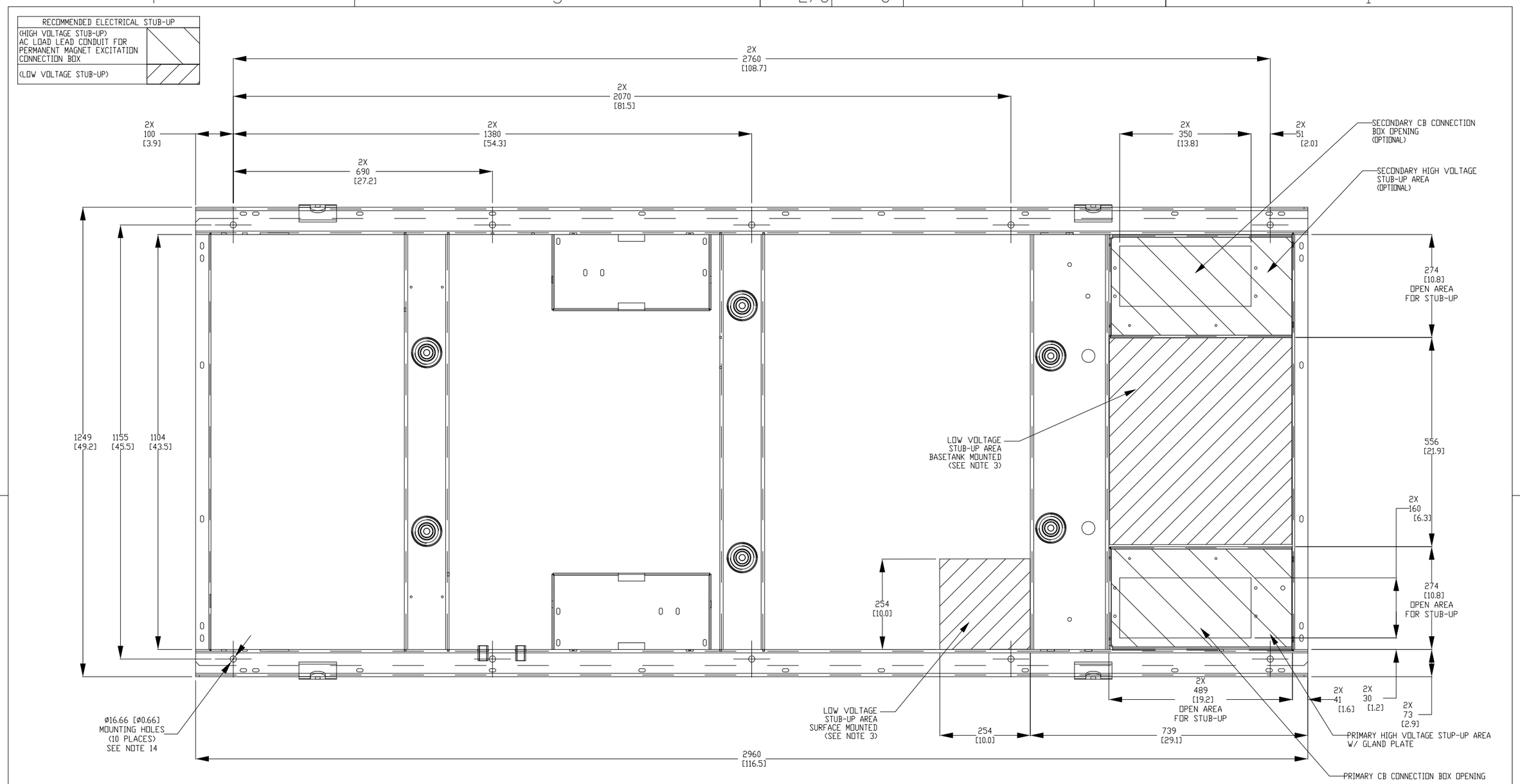

DRAWING CREATED FROM PRO/ENGINEER 3D FILE. ECO MODIFICATION TO BE APPLIED TO SOLID MODEL ONLY.

DIMENSIONS ARE IN MILLIMETERS [INCHES]

INSTALLATION DRAWING

GENERAC POWER SYSTEMS OWNS THE COPYRIGHT OF THIS DRAWING WHICH IS SUPPLIED IN CONFIDENCE AND MUST NOT BE USED FOR ANY PURPOSE OTHER THAN FOR WHICH IT IS SUPPLIED WITHOUT THE EXPRESS WRITTEN CONSENT OF GENERAC POWER SYSTEMS.
© GENERAC POWER SYSTEMS 2012

ELECTRONICALLY APPROVED
INSIDE WINDCHILL

GENERAC

TITLE
STUB-UP VIEW
D6.7L, 60HZ: SD150, PD135
SD175, PD158

ISSUE DATE: 9/30/14

SIZE	CAGE NO	DWG NO	REV
B	N/A	0J4194	J

SCALE 0.120 | WT-KG | SHEET 2 of 3

OPEN SET

MODEL	VOLTAGE	UPSIZE	WEIGHT	CENTER OF GRAVITY DIM X	CENTER OF GRAVITY DIM Y	CENTER OF GRAVITY DIM Z
SD150, PD135	240V, 1Ø		1,566 kg [3,452 lbs]	1668 [65.7]	606 [23.9]	595 [23.4]
SD150, PD135	240V, 1Ø	200	1,662 kg [3,664 lbs]	1632 [64.3]	601 [23.7]	594 [23.4]
SD175, PD158	240V, 1Ø		1,633 kg [3,600 lbs]	1636 [64.4]	602 [23.7]	595 [23.4]
SD175, PD158	240V, 1Ø	200	1,633 kg [3,600 lbs]	1636 [64.4]	602 [23.7]	595 [23.4]
SD150, PD135	208V, 240V, 480V		1,778 kg [3,920 lbs]	1559 [61.4]	594 [23.4]	595 [23.4]
SD150, PD135	208V, 240V, 480V	200	1,777 kg [3,917 lbs]	1559 [61.4]	594 [23.4]	595 [23.4]
SD150, PD135	208V, 240V, 480V	250	1,880 kg [4,144 lbs]	1532 [60.3]	590 [23.2]	594 [23.4]
SD175, PD158	208V, 240V, 480V		1,639 kg [3,614 lbs]	1634 [64.3]	601 [23.7]	595 [23.4]
SD175, PD158	208V, 240V, 480V	250	1,742 kg [3,840 lbs]	1600 [63.0]	596 [23.5]	594 [23.4]
SD175, PD158	208V, 240V, 480V	300	1,804 kg [3,977 lbs]	1580 [62.2]	594 [23.4]	594 [23.4]
SD150, PD135	600V		1,615 kg [3,561 lbs]	1647 [64.8]	603 [23.7]	595 [23.4]
SD150, PD135	600V	200	1,629 kg [3,591 lbs]	1642 [64.6]	602 [23.7]	595 [23.4]
SD150, PD135	600V	250	1,732 kg [3,818 lbs]	1607 [63.3]	598 [23.5]	594 [23.4]
SD175, PD158	600V		1,647 kg [3,631 lbs]	1631 [64.2]	601 [23.7]	595 [23.4]
SD175, PD158	600V	250	1,750 kg [3,858 lbs]	1597 [62.9]	596 [23.5]	594 [23.4]
SD175, PD158	600V	300	1,812 kg [3,994 lbs]	1577 [62.1]	594 [23.4]	594 [23.4]

NOTE:
CENTER OF GRAVITY AND WEIGHT MAY CHANGE DUE TO OPTIONS

STD ENCLOSURE, STEEL / STD ENCLOSURE, ALUMINUM

MODEL	VOLTAGE	UPSIZE	WEIGHT	CENTER OF GRAVITY DIM X	CENTER OF GRAVITY DIM Y	CENTER OF GRAVITY DIM Z	WEIGHT	CENTER OF GRAVITY DIM X	CENTER OF GRAVITY DIM Y	CENTER OF GRAVITY DIM Z
SD150, PD135	240V, 1Ø		1,973 kg [4,350 lbs]	1758 [69.2]	693 [27.3]	580 [22.9]	1,765 kg [3,891 lbs]	1734 [68.3]	654 [25.7]	578 [22.8]
SD150, PD135	240V, 1Ø	200	2,069 kg [4,561 lbs]	1725 [67.9]	685 [27.0]	580 [22.9]	1,861 kg [4,102 lbs]	1698 [66.9]	647 [25.5]	578 [22.8]
SD175, PD158	240V, 1Ø		2,040 kg [4,498 lbs]	1730 [68.1]	687 [27.0]	580 [22.9]	1,832 kg [4,039 lbs]	1703 [67.1]	648 [25.5]	578 [22.8]
SD175, PD158	240V, 1Ø	200	2,040 kg [4,498 lbs]	1730 [68.1]	687 [27.0]	580 [22.9]	1,832 kg [4,039 lbs]	1703 [67.1]	648 [25.5]	578 [22.8]
SD150, PD135	208V, 240V, 480V		2,185 kg [4,818 lbs]	1662 [65.4]	675 [26.6]	580 [22.9]	1,977 kg [4,359 lbs]	1630 [64.2]	638 [25.1]	578 [22.8]
SD150, PD135	208V, 240V, 480V	200	2,184 kg [4,814 lbs]	1662 [65.4]	675 [26.6]	580 [22.9]	1,976 kg [4,356 lbs]	1630 [64.2]	638 [25.1]	578 [22.8]
SD150, PD135	208V, 240V, 480V	250	2,287 kg [5,041 lbs]	1635 [64.4]	668 [26.3]	580 [22.9]	2079 kg [4,583 lbs]	1602 [63.1]	632 [24.9]	578 [22.8]
SD175, PD158	208V, 240V, 480V		2,046 kg [4,511 lbs]	1728 [68.0]	686 [27.0]	580 [22.9]	1,838 kg [4,052 lbs]	1701 [67.0]	648 [25.5]	578 [22.8]
SD175, PD158	208V, 240V, 480V	250	2,149 kg [4,737 lbs]	1696 [66.8]	678 [26.7]	580 [22.9]	1,941 kg [4,279 lbs]	1667 [65.6]	641 [25.2]	578 [22.8]
SD175, PD158	208V, 240V, 480V	300	2,211 kg [4,874 lbs]	1677 [66.0]	674 [26.5]	580 [22.9]	2,003 kg [4,415 lbs]	1647 [64.8]	638 [25.1]	578 [22.8]
SD150, PD135	600V		2,022 kg [4,458 lbs]	1738 [68.4]	689 [27.1]	580 [22.8]	1,814 kg [4,000 lbs]	1713 [67.4]	650 [25.6]	578 [22.8]
SD150, PD135	600V	200	2,036 kg [4,488 lbs]	1733 [68.2]	688 [27.1]	580 [22.8]	1,828 kg [4,030 lbs]	1708 [67.2]	649 [25.6]	578 [22.8]
SD150, PD135	600V	250	2,139 kg [4,715 lbs]	1700 [66.9]	680 [26.8]	580 [22.9]	1,931 kg [4,257 lbs]	1673 [65.9]	642 [25.3]	578 [22.8]
SD175, PD158	600V		2,054 kg [4,529 lbs]	1725 [67.9]	686 [27.0]	580 [22.8]	1,846 kg [4,070 lbs]	1698 [66.8]	647 [25.5]	578 [22.8]
SD175, PD158	600V	250	2,157 kg [4,755 lbs]	1693 [66.7]	678 [26.7]	580 [22.8]	1,949 kg [4,296 lbs]	1664 [65.5]	640 [25.2]	578 [22.8]
SD175, PD158	600V	300	2,219 kg [4,892 lbs]	1674 [65.9]	674 [26.5]	580 [22.8]	2,011 kg [4,433 lbs]	1644 [64.7]	637 [25.1]	578 [22.8]

L1A ENCLOSURE, STEEL / L1A ENCLOSURE, ALUMINUM

MODEL	VOLTAGE	UPSIZE	WEIGHT	CENTER OF GRAVITY DIM X	CENTER OF GRAVITY DIM Y	CENTER OF GRAVITY DIM Z	WEIGHT	CENTER OF GRAVITY DIM X	CENTER OF GRAVITY DIM Y	CENTER OF GRAVITY DIM Z
SD150, PD135	240V, 1Ø		2,103 kg [4,637 lbs]	1666 [65.6]	714 [28.1]	580 [22.8]	1,821 kg [4,015 lbs]	1689 [66.5]	666 [26.2]	578 [22.8]
SD150, PD135	240V, 1Ø	200	2,199 kg [4,847 lbs]	1639 [64.5]	706 [27.8]	580 [22.8]	1,917 kg [4,226 lbs]	1656 [65.2]	659 [25.9]	578 [22.8]
SD175, PD158	240V, 1Ø		2,170 kg [4,784 lbs]	1643 [64.7]	708 [27.9]	580 [22.8]	1,888 kg [4,162 lbs]	1661 [65.4]	660 [26.0]	578 [22.8]
SD175, PD158	240V, 1Ø	200	2,170 kg [4,784 lbs]	1643 [64.7]	708 [27.9]	580 [22.8]	1,888 kg [4,162 lbs]	1661 [65.4]	660 [26.0]	578 [22.8]
SD150, PD135	208V, 240V, 480V		2,315 kg [5,104 lbs]	1586 [62.4]	695 [27.4]	580 [22.8]	2,033 kg [4,482 lbs]	1593 [62.7]	649 [25.6]	578 [22.8]
SD150, PD135	208V, 240V, 480V	200	2,314 kg [5,101 lbs]	1586 [62.4]	695 [27.4]	580 [22.8]	2,032 kg [4,479 lbs]	1593 [62.7]	649 [25.6]	578 [22.8]
SD150, PD135	208V, 240V, 480V	250	2,417 kg [5,328 lbs]	1564 [61.6]	688 [27.1]	580 [22.9]	2,135 kg [4,706 lbs]	1567 [61.7]	643 [25.3]	578 [22.8]
SD175, PD158	208V, 240V, 480V		2,176 kg [4,798 lbs]	1641 [64.6]	707 [27.8]	580 [22.8]	1,894 kg [4,176 lbs]	1659 [65.3]	660 [26.0]	578 [22.8]
SD175, PD158	208V, 240V, 480V	250	2,279 kg [5,024 lbs]	1614 [63.5]	699 [27.5]	580 [22.8]	1,997 kg [4,402 lbs]	1628 [64.1]	653 [25.7]	578 [22.8]
SD175, PD158	208V, 240V, 480V	300	2,341 kg [5,161 lbs]	1599 [63.0]	694 [27.3]	580 [22.8]	2,059 kg [4,539 lbs]	1609 [63.3]	649 [25.6]	578 [22.8]
SD150, PD135	600V		2,152 kg [4,745 lbs]	1650 [65.0]	709 [27.9]	580 [22.9]	1,870 kg [4,123 lbs]	1669 [65.7]	662 [26.0]	578 [22.8]
SD150, PD135	600V	200	2,166 kg [4,775 lbs]	1646 [64.8]	708 [27.9]	580 [22.8]	1,884 kg [4,153 lbs]	1665 [65.6]	661 [26.0]	578 [22.8]
SD150, PD135	600V	250	2,269 kg [5,002 lbs]	1619 [63.7]	699 [27.5]	580 [22.9]	1,987 kg [4,380 lbs]	1633 [64.3]	654 [25.7]	578 [22.8]
SD175, PD158	600V		2,184 kg [4,814 lbs]	1639 [64.5]	706 [27.8]	580 [22.8]	1,902 kg [4,193 lbs]	1656 [65.2]	659 [25.9]	578 [22.8]
SD175, PD158	600V	250	2,287 kg [5,041 lbs]	1613 [63.5]	698 [27.5]	580 [22.8]	2,005 kg [4,420 lbs]	1625 [64.0]	652 [25.7]	578 [22.8]
SD175, PD158	600V	300	2,349 kg [5,178 lbs]	1597 [62.9]	693 [27.3]	580 [22.9]	2,067 kg [4,556 lbs]	1607 [63.3]	648 [25.5]	578 [22.8]

L2A ENCLOSURE, STEEL / L2A ENCLOSURE, ALUMINUM

MODEL	VOLTAGE	UPSIZE	WEIGHT	CENTER OF GRAVITY DIM X	CENTER OF GRAVITY DIM Y	CENTER OF GRAVITY DIM Z	WEIGHT	CENTER OF GRAVITY DIM X	CENTER OF GRAVITY DIM Y	CENTER OF GRAVITY DIM Z
SD150, PD135	240V, 1Ø		2,190 kg [4,829 lbs]	1764 [69.4]	831 [32.7]	581 [22.9]	1,858 kg [4,097 lbs]	1689 [66.5]	666 [26.2]	578 [22.8]
SD150, PD135	240V, 1Ø	200	2,286 kg [5,039 lbs]	1733 [68.2]	818 [32.2]	581 [22.9]	1,954 kg [4,307 lbs]	1657 [65.2]	659 [25.9]	578 [22.8]
SD175, PD158	240V, 1Ø		2,257 kg [4,976 lbs]	1739 [68.5]	821 [32.3]	581 [22.9]	1,925 kg [4,245 lbs]	1661 [65.4]	660 [26.0]	578 [22.8]
SD175, PD158	240V, 1Ø	200	2,257 kg [4,976 lbs]	1739 [68.5]	821 [32.3]	581 [22.9]	1,925 kg [4,245 lbs]	1661 [65.4]	660 [26.0]	578 [22.8]
SD150, PD135	208V, 240V, 480V		2,402 kg [5,296 lbs]	1677 [66.0]	802 [31.6]	581 [22.9]	2,070 kg [4,565 lbs]	1593 [62.7]	649 [25.6]	578 [22.8]
SD150, PD135	208V, 240V, 480V	200	2,401 kg [5,293 lbs]	1677 [66.0]	802 [31.6]	581 [22.9]	2,069 kg [4,561 lbs]	1593 [62.7]	649 [25.6]	578 [22.8]
SD150, PD135	208V, 240V, 480V	250	2,504 kg [5,520 lbs]	1652 [65.0]	791 [31.1]	581 [22.9]	2,172 kg [4,788 lbs]	1568 [61.7]	643 [25.3]	578 [22.8]
SD175, PD158	208V, 240V, 480V		2,263 kg [4,989 lbs]	1737 [68.4]	820 [32.3]	581 [22.9]	1,931 kg [4,258 lbs]	1659 [65.3]	660 [26.0]	578 [22.8]
SD175, PD158	208V, 240V, 480V	250	2,366 kg [5,216 lbs]	1707 [67.2]	807 [31.8]	581 [22.9]	2,034 kg [4,484 lbs]	1628 [64.1]	653 [25.7]	578 [22.8]
SD175, PD158	208V, 240V, 480V	300	2,428 kg [5,352 lbs]	1690 [66.5]	800 [31.5]	581 [22.9]	2,096 kg [4,620 lbs]	1610 [63.4]	649 [25.6]	578 [22.8]
SD150, PD135	600V		2,239 kg [4,937 lbs]	1746 [68.8]	824 [32.4]	581 [22.9]	1,907 kg [4,205 lbs]	1669 [65.7]	662 [26.0]	578 [22.8]
SD150, PD135	600V	200	2,253 kg [4,967 lbs]	1742 [68.6]	822 [32.4]	581 [22.9]	1,921 kg [4,235 lbs]	1665 [65.6]	661 [26.0]	578 [22.8]
SD150, PD135	600V	250	2,356 kg [5,194 lbs]	1712 [67.4]	809 [31.9]	581 [22.9]	2,024 kg [4,462 lbs]	1633 [64.3]	654 [25.7]	578 [22.8]
SD175, PD158	600V		2,271 kg [5,007 lbs]	1734 [68.3]	819 [32.3]	581 [22.9]	1,939 kg [4,276 lbs]	1656 [65.2]	659 [25.9]	578 [22.8]
SD175, PD158	600V	250	2,374 kg [5,233 lbs]	1704 [67.1]	806 [31.7]	581 [22.9]	2,042 kg [4,501 lbs]	1626 [64.0]	652 [25.7]	578 [22.8]
SD175, PD158	600V	300	2,436 kg [5,370 lbs]	1687 [66.4]	799 [31.5]	581 [22.9]	2,104 kg [4,638 lbs]	1608 [63.3]	648 [25.5]	578 [22.8]

DRAWING CREATED FROM PRO/ENGINEER 3D FILE. ECO MODIFICATION TO BE APPLIED TO SOLID MODEL ONLY.

INSTALLATION DRAWING

GENERAC POWER SYSTEMS OWNS THE COPYRIGHT OF THIS DRAWING WHICH IS SUPPLIED IN CONFIDENCE AND MUST NOT BE USED FOR ANY PURPOSE OTHER THAN FOR WHICH IT IS SUPPLIED WITHOUT THE EXPRESS WRITTEN CONSENT OF GENERAC POWER SYSTEMS.
© GENERAC POWER SYSTEMS 2012

ELECTRONICALLY APPROVED
INSIDE WINDCHILL

GENERAC

TITLE
WEIGHT & CENTER OF GRAVITY
D6.7L, 60HZ: SD150, PD135
SD175, PD158

ISSUE DATE: 9/30/14

SIZE	CAGE NO	DWG NO	REV
B	N/A	0J4194	J

SCALE 0.035 | WT-KG | SHEET 3 of 3

LEGEND

AH1	– ALARM HORN	GND	– GROUND BAR CONNECTION
ALT	– DC CHARGE ALTERNATOR	IFT	– INTERFACE TRANSFORMER
AVR	– AUTO VOLTAGE REGULATOR	J_	– ENGINE CONTROL MODULE CONN.
BCC	– BATTERY CHARGER CONNECTOR	LD	– LEAK DETECTOR
BCH	– BATTERY CHARGER	MLCB	– MAIN LINE CIRCUIT BREAKER
CAND	– CAN BUS DIAGNOSTIC CONNECTOR	MOD	– MODEM CONNECTOR
CB	– CIRCUIT BREAKER DPE	NB	– NEUTRAL BLOCK
CO	– CROSS OVER CONNECTOR	R_	– RESISTOR
COM	– COMMUNICATION CONNECTOR	RB_	– RELAY BOARD
CT_	– CURRENT TRANSFORMER	RB_A	– RELAY BOARD CONNECTOR
DB	– DIODE BRIDGE	RR	– RUN RELAY
EDC	– ENGINE DIGITAL CONTROL	SC	– STARTER CONTACTOR
ES1	– EMERGENCY STOP SWITCH	SM	– STARTER MOTOR
EXC	– EXCITER	SW1	– OFF/AUTO/MANUAL SWITCH
F_	– FUSE	SWC	– SWITCH CONNECTOR
FLS_	– FUEL LEVEL SENDER	TB_	– TERMINAL BLOCK
GFCI	– GROUND FAULT CIRCUIT INTERRUPT	WLS_	– COOLANT LEVEL SENDER

NOTE: ALL WIRES 18 AWG 300V UL LISTED UNLESS SHOWN OTHERWISE

[12] — AWG SIZE

COMPONENTS LOCATED IN ALTERNATOR CONNECTION BOX

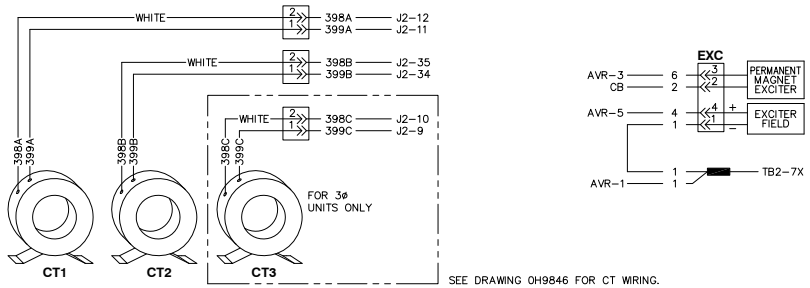

SEE DRAWING 0H9846 FOR CT WIRING.

COMPONENTS LOCATED IN HIGH VOLTAGE CUSTOMER CONNECTION MODULE

CONNECTIONS FOR 1Ø UNIT

NOTE: ALL WIRES IN THIS SECTION ARE 600V RATED

CONNECTIONS FOR 3Ø UNIT

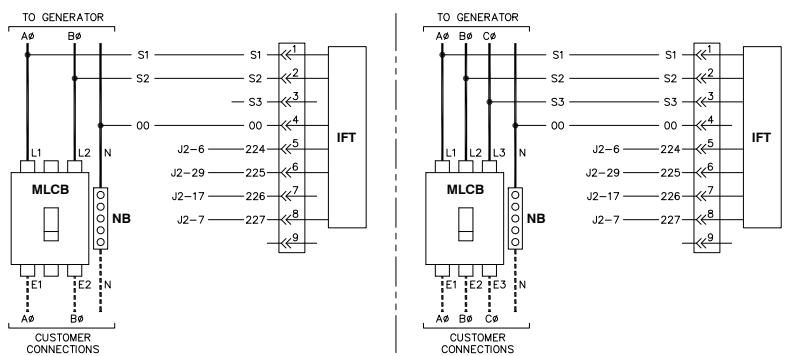

WIRING - DIAGRAM
D6.7L G17 12V W/CAN BUS
DRAWING #: 0H9882

REVISION: H-9136-D
DATE: 6/9/11

COMPONENTS LOCATED IN HIGH VOLTAGE CUSTOMER CONNECTION MODULE

NOTE: ALL WIRES ON THIS PAGE ARE 600V RATED

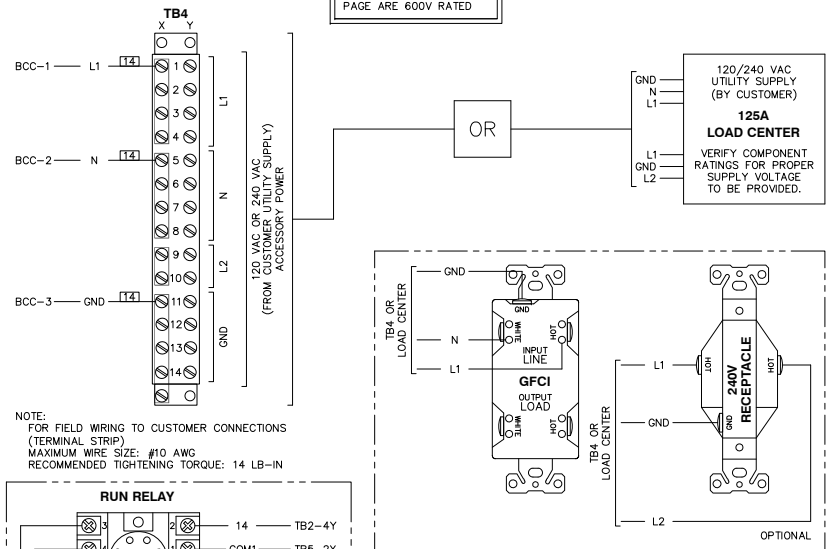

NOTE:
FOR FIELD WIRING TO CUSTOMER CONNECTIONS (TERMINAL STRIP)
MAXIMUM WIRE SIZE: #10 AWG
RECOMMENDED TIGHTENING TORQUE: 14 LB-IN

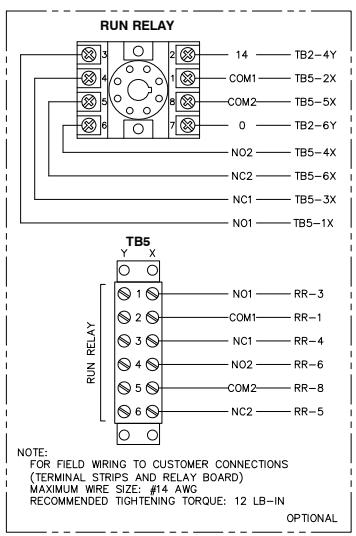

NOTE:
FOR FIELD WIRING TO CUSTOMER CONNECTIONS (TERMINAL STRIPS AND RELAY BOARD)
MAXIMUM WIRE SIZE: #14 AWG
RECOMMENDED TIGHTENING TORQUE: 12 LB-IN

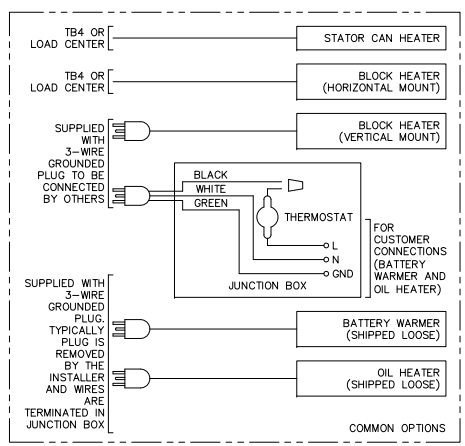

WIRING - DIAGRAM
D6.7L G17 12V W/CAN BUS
DRAWING #: 0H9882

REVISION: H-9136-D
DATE: 6/9/11

COMPONENTS LOCATED ON LOW VOLTAGE CUSTOMER CONNECTION PANEL

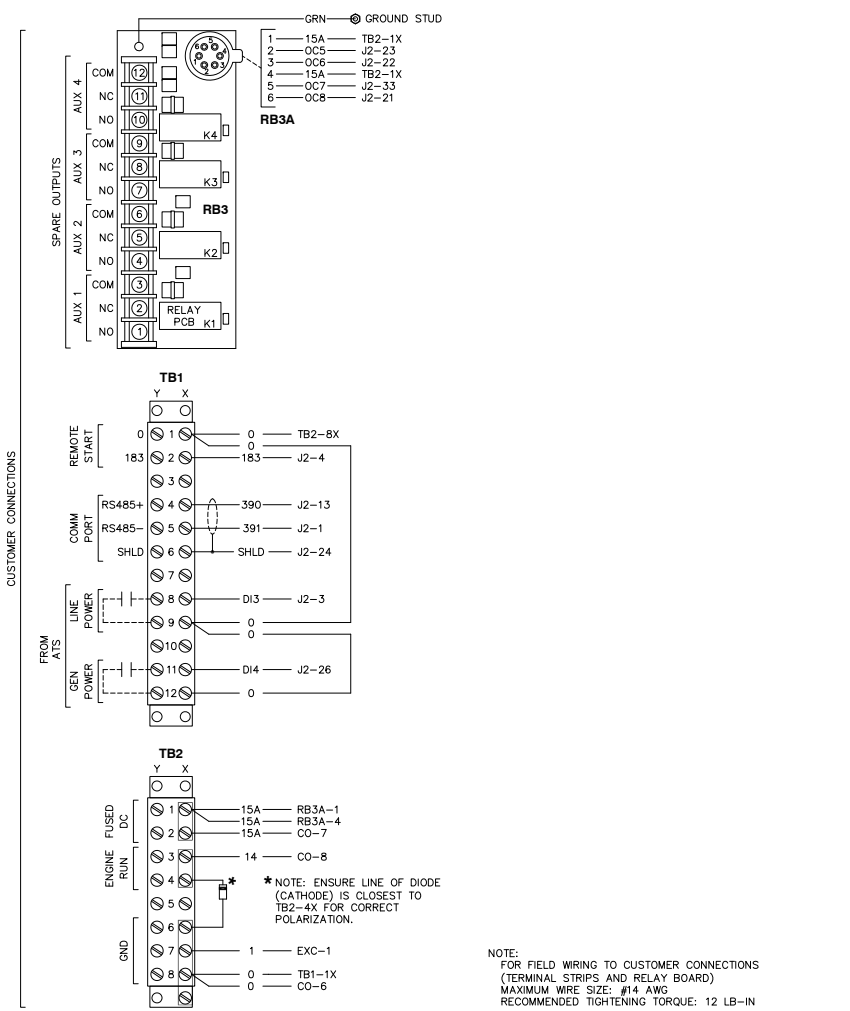

NOTE:
FOR FIELD WIRING TO CUSTOMER CONNECTIONS (TERMINAL STRIPS AND RELAY BOARD)
MAXIMUM WIRE SIZE: #14 AWG
RECOMMENDED TIGHTENING TORQUE: 12 LB-IN

PAGE 3 OF 6

WIRING - DIAGRAM
D6.7L G17 12V W/CAN BUS
DRAWING #: 0H9882

REVISION: H-9136-D
DATE: 6/9/11

COMPONENTS LOCATED IN CONTROL PANEL

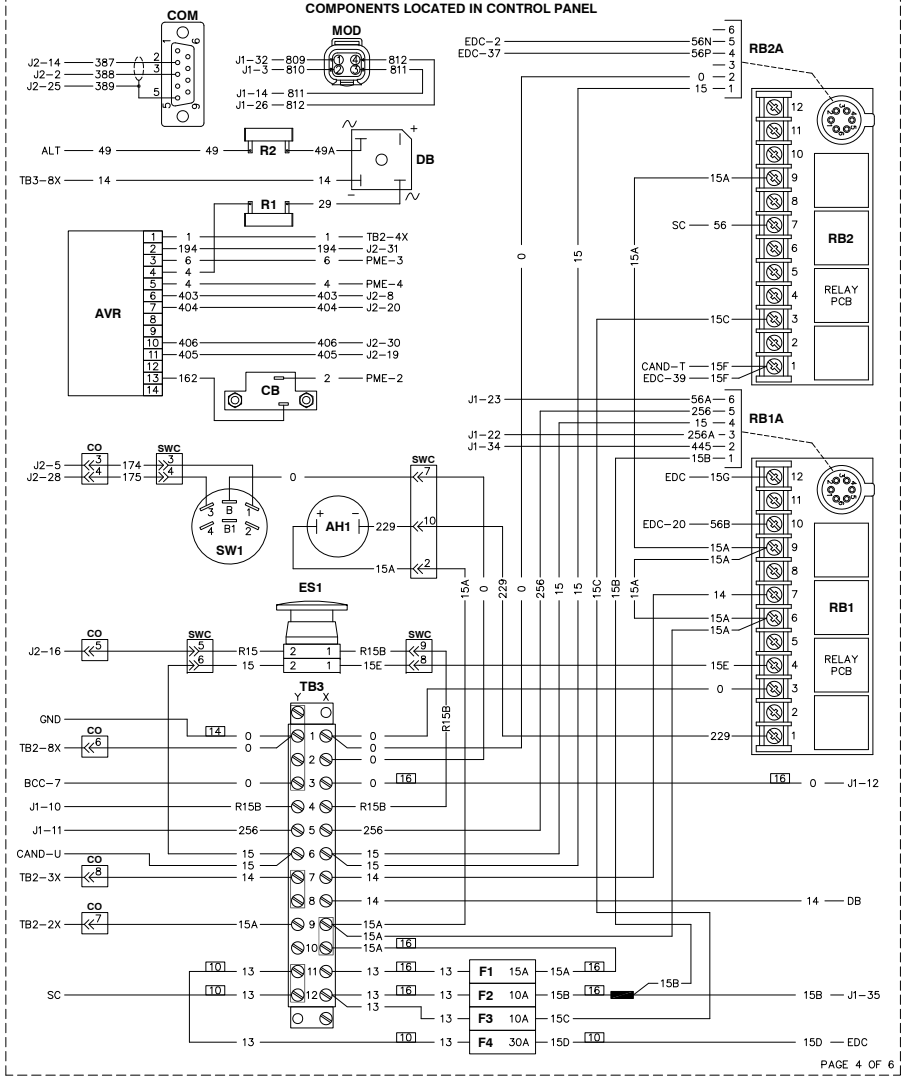

PAGE 4 OF 6

WIRING - DIAGRAM
D6.7L G17 12V W/CAN BUS
DRAWING #: 0H9882

REVISION: H-9136-D
DATE: 6/9/11

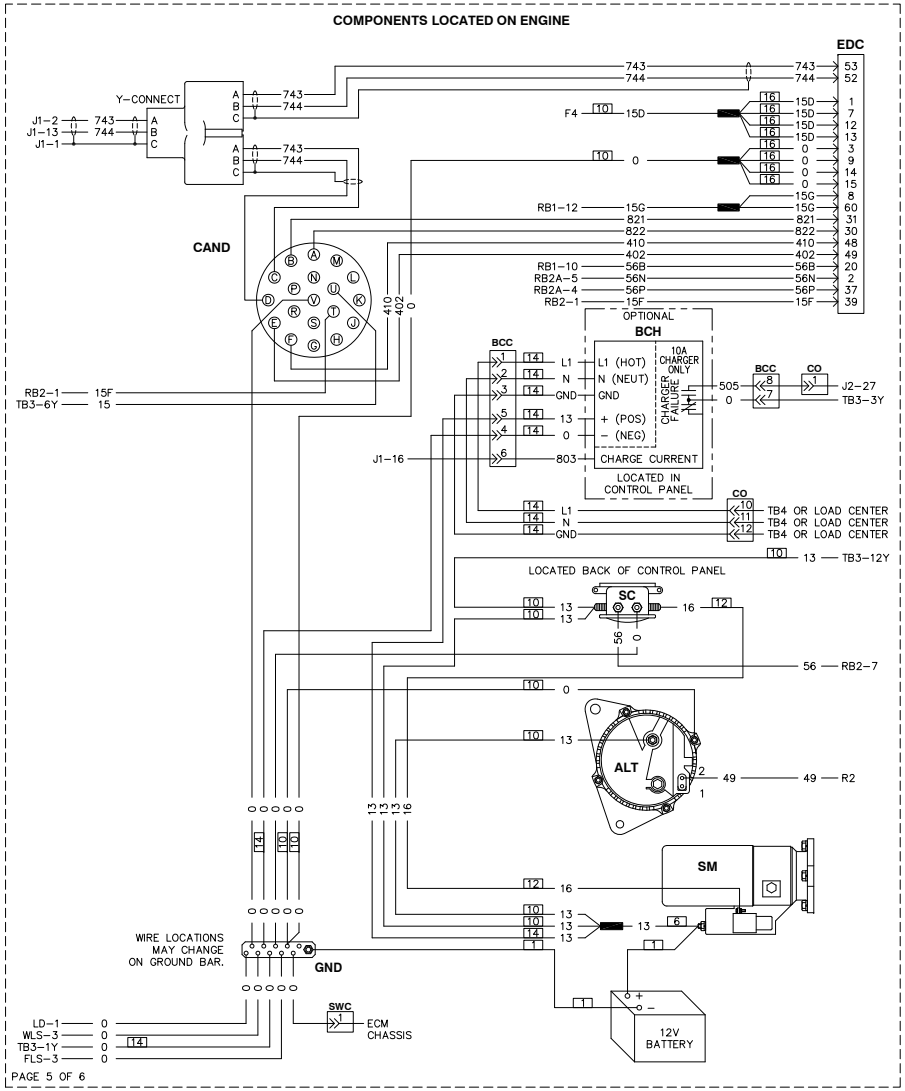
COMPONENTS LOCATED ON ENGINE
EDC
Y-CONNECT
CAND
OPTIONAL
BCH
10A CHARGER ONLY
CHARGER FAILURE
L1 (HOT)
N (NEUT)
GND
+ (POS)
- (NEG)
CHARGE CURRENT
LOCATED IN CONTROL PANEL
LOCATED BACK OF CONTROL PANEL
SC
ALT
SM
GND
WIRE LOCATIONS MAY CHANGE ON GROUND BAR.
SWC
ECM CHASSIS
12V BATTERY
TB4 OR LOAD CENTER
TB3-12Y
TB3-3Y
J2-27
RB2-7
R2
PAGE 5 OF 6

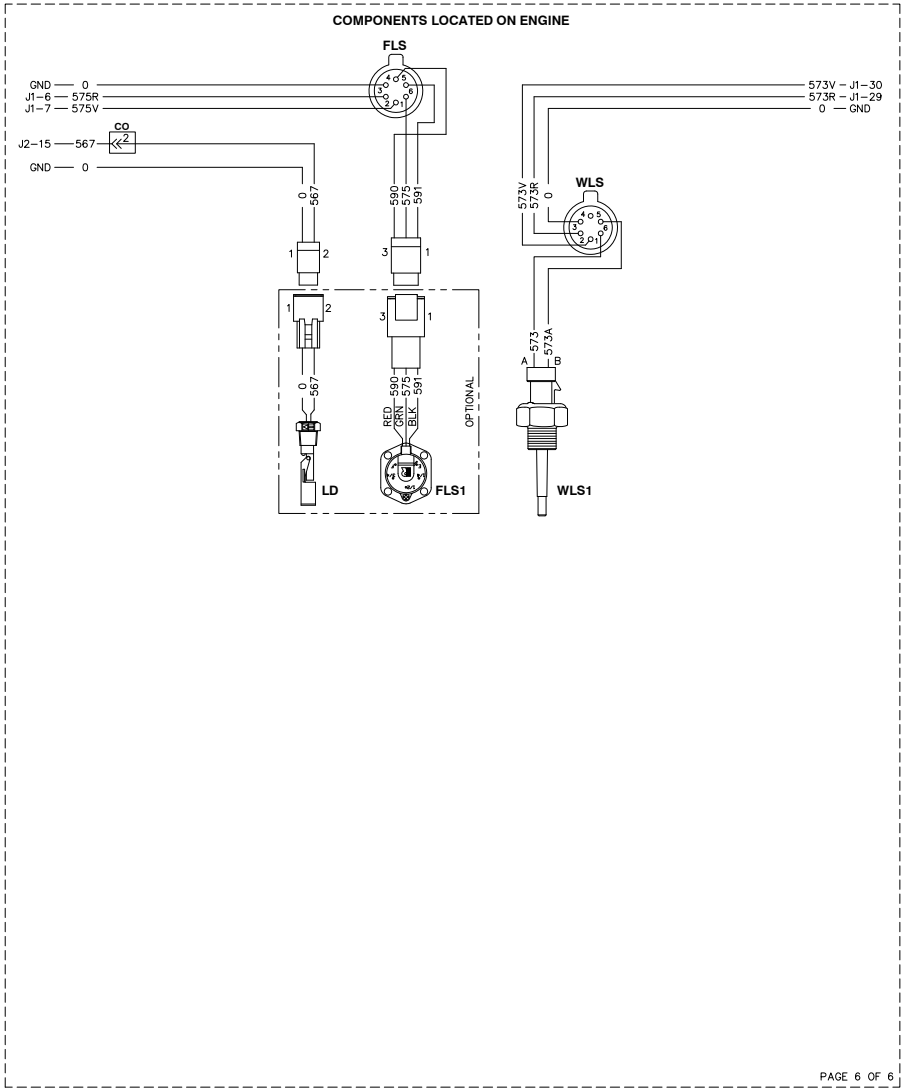
COMPONENTS LOCATED ON ENGINE
FLS
WLS
LD
FLS1
WLS1
OPTIONAL
573V – J1-30
573R – J1-29
0 — GND
PAGE 6 OF 6

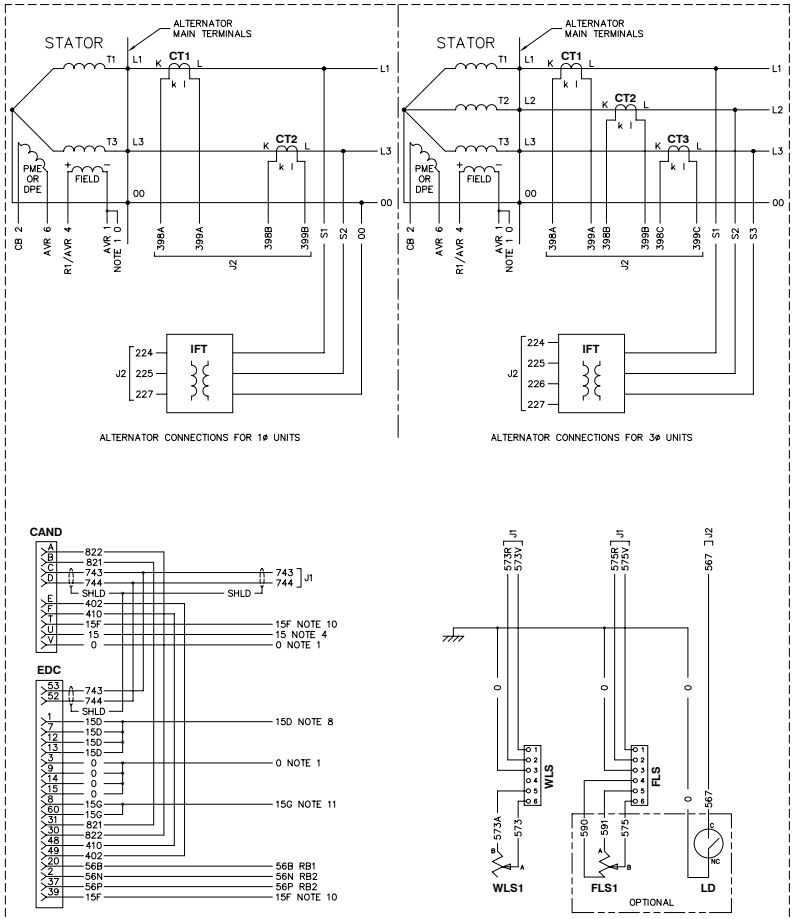

PAGE 1 OF 4

SCHEMATIC - DIAGRAM
D6.7L G17 12V W/CAN BUS
DRAWING #: 0H9883

REVISION: -A-
DATE: 7/9/10

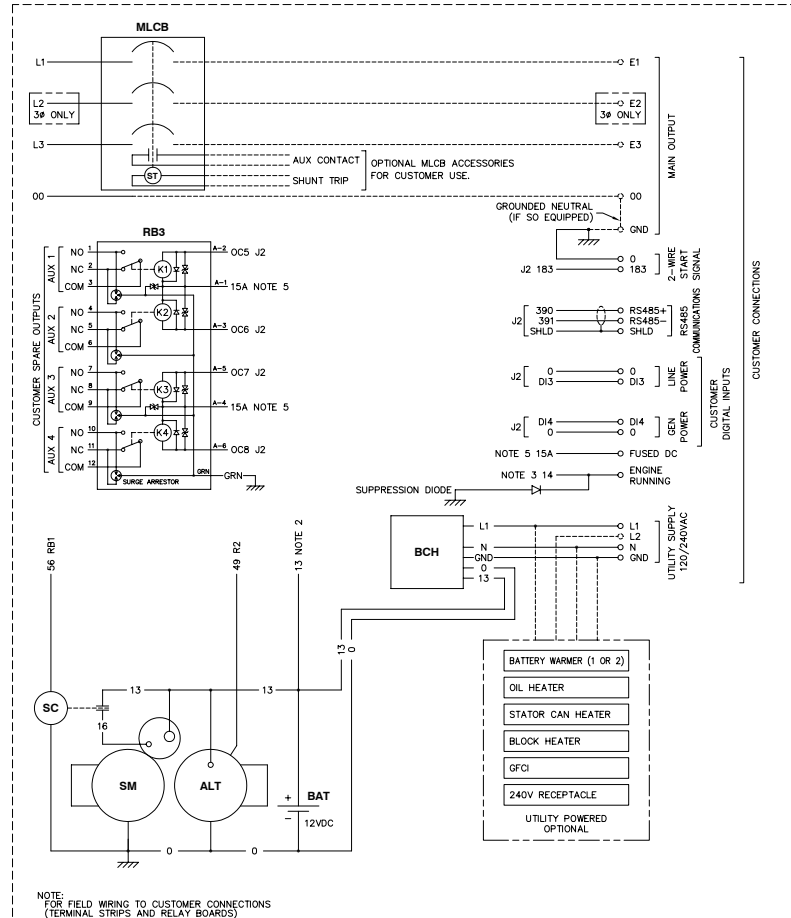

PAGE 2 OF 4

SCHEMATIC - DIAGRAM
D6.7L G17 12V W/CAN BUS
DRAWING #: 0H9883

REVISION: -A-
DATE: 7/9/10

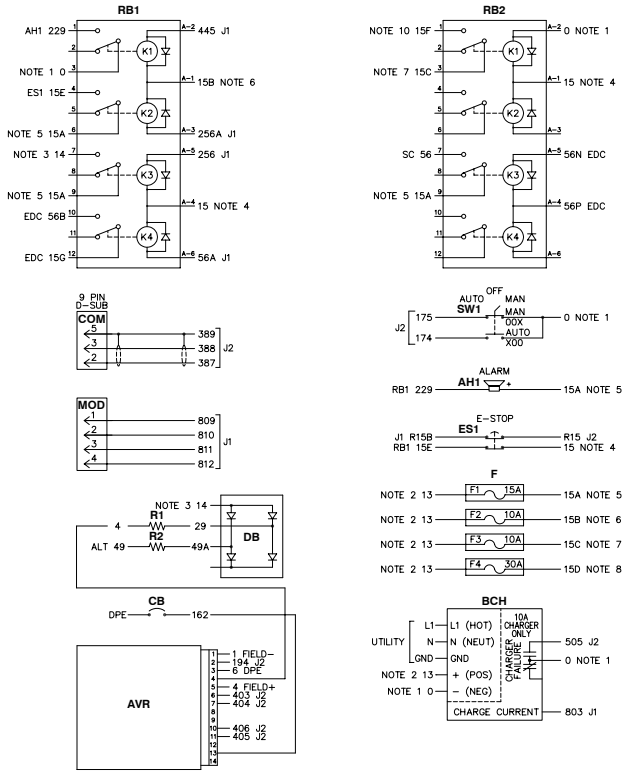

LEGEND

00 – NEUTRAL	COM – COMMUNICATION CONNECTOR	GFCI – GROUND FAULT CIRCUIT INTERRUPT	RB_ – RELAY BOARD
AH1 – ALARM HORN	CT_ – CURRENT TRANSFORMER	IFT – INTERFACE TRANSFORMER	SC – STARTER CONTACTOR
ALT – DC CHARGE ALTERNATOR	DB – DIODE BRIDGE	J_ – ENGINE CONTROL MODULE CONN.	SM – STARTER MOTOR
AVR – AUTO VOLTAGE REGULATOR	DPE – EXCITER	LD – LEAK DETECTOR	SW1 – OFF/AUTO/MANUAL SWITCH
BAT – BATTERY	EDC – ENGINE DIGITAL CONTROL	MLCB – MAIN LINE CIRCUIT BREAKER	WLS_ – COOLANT LEVEL SENDER
BCH – BATTERY CHARGER	ES1 – EMERGENCY STOP SWITCH	MOD – MODEM CONNECTOR	
CAND – CAN BUS DIAGNOSTIC CONN.	F_ – FUSE	PME – PERMANENT MAGNET EXCITER	
CB – CIRCUIT BREAKER	FLS_ – FUEL LEVEL SENDER	R_ – RESISTOR	

SCHEMATIC - DIAGRAM
D6.7L G17 12V W/CAN BUS
DRAWING #: 0H9883

REVISION: -A-
DATE: 7/9/10

EDC CONNECTOR

PIN	WIRE	TO	FUNCTION
1	15D	F4	NOTE 8
2	56N	RB2A–5	EDC START RELAY OUTPUT –
3	0	GND	NOTE 1
7	15D	F4	NOTE 8
8	15G	RB1–12	NOTE 11
9	0	GND	NOTE 1
12	15D	F4	NOTE 8
13	15D	F4	NOTE 8
14	0	GND	NOTE 1
15	0	GND	NOTE 1
20	56B	RB1–10	ENGINE START COMMAND INPUT
30	822	CAND–A	ISO DIAGNOSTIC L–LINE
31	821	CAND–B	ISO DIAGNOSTIC K–LINE
32	–	R3	ENGINE SPEED SETTING
37	56P	RB2A–4	EDC START RELAY OUTPUT +
39	15F	RB2–1	NOTE 10
48	410	CAND–F	EDC SYNC OUTPUT
49	402	CAND–E	EDC TACHOMETER OUTPUT
52	744	CAND–D/J1–13	CAN BUS LOW
53	743	CAND–C/J1–2	CAN BUS HIGH
60	15G	RB1–12	NOTE 11
87	–	R3	ENGINE SPEED SETTING

AVR CONNECTOR

PIN	WIRE	TO	FUNCTION
1	1	FIELD	– FIELD
2	194	J2–31	+12VDC
3	6	DPE	DPE OUTPUT
4	4	R1/FIELD	+ FIELD
5	4	R1/FIELD	+ FIELD
6	403	J2–8	GATE TRIGGER B
7	404	J2–20	GATE TRIGGER A
10	406	J2–30	ZERO CROSSING I/P
11	405	J2–19	GROUND (ISO)
13	162	CB	DPE OUTPUT (AFTER CB)

CAND CONNECTOR

PIN	WIRE	TO	FUNCTION
A	822	EDC–30	ISO DIAGNOSTIC L–LINE
B	821	EDC–31	ISO DIAGNOSTIC K–LINE
C	743	EDC–53/J1–2	CAN BUS HIGH
D	744	EDC–52/J1–13	CAN BUS LOW
E	402	EDC–49	EDC TACHOMETER OUTPUT
F	410	EDC–48	EDC SYNC OUTPUT
T	15F	RB2–1	NOTE 10
U	15	–	NOTE 4
V	0	GND	NOTE 1

ENGINE CONTROL MODULE CONNECTIONS

J1

PIN	WIRE	TO	FUNCTION
1	SHLD	–	CAN BUS DRAIN
2	743	EDC–53/CAND–C	CAN BUS HIGH
3	810	MOD–2	MODEM SIGNAL RETURN
6	575R	FLS–2	FUEL LEVEL RTN
7	575V	FLS–1	FUEL LEVEL +
10	R15B	ES1	OVERSPEED/WATCHDOG
11	256	RB1A–5	FUEL RELAY
12	0	GND	NOTE 1
13	744	EDC–52/CAND–D	CAN BUS LOW
14	811	MOD–3	MODEM DATA CARRIER DETECT
16	803	BCH	BAT CHARGER CURRENT
22	256A	RB1A–3	ENGINE ECU POWER RELAY
23	56A	RB1A–6	STARTER RELAY
26	812	MOD–4	MODEM ENABLE
29	573R	WLS–2	COOLANT LVL RTN
30	573V	WLS–1	COOLANT LVL +
32	809	MOD–1	MODEM 12V POWER
34	445	RB1A–2	ALARM RELAY
35	15B	F2	NOTE 6

J2

	PIN	WIRE	TO	FUNCTION
	1	391	CUST CON	RS485– (XFER SW)
	2	388	COM–3	RS232 TX (GENLINK)
	3	013	CUST CON	SPARE IN 3/LINE PWR
	4	183	CUST CON	REMOTE START
	5	174	SW1	"AUTO" START
	6	224	IFT	V SENSE GEN A PH
	7	227	IFT	V SENSE RTN
	8	403	AVR–6	AVR GATE TRIGGER B
*	9	399C	CT3	GEN C PH CURRENT –
*	10	398C	CT3	GEN C PH CURRENT +
	11	399A	CT1	GEN A PH CURRENT –
	12	398A	CT1	GEN A PH CURRENT +
	13	390	CUST CON	RS485+ (XFER SW)
	14	387	COM–2	RS232 RX (GENLINK)
	15	567	LD	LEAK DETECTOR
	16	R15	ES1	EMERGENCY STOP
*	17	226	IFT	V SENSE GEN C PH
	19	405	AVR–11	AVR GROUND
	20	404	AVR–7	AVR GATE TRIGGER A
	21	OC8	RB3A–6	SPARE OUTPUT 4
	22	OC6	RB3A–3	SPARE OUTPUT 2
	23	OC5	RB3A–2	SPARE OUTPUT 1
	24	SHLD	CUST CON	RS485 DRAIN (XFER SW)
	25	389	COM–5	RS232 COM (GENLINK)
	26	014	CUST CON	SPARE IN 4/GEN PWR
	27	505	BCH	BAT CHARGER FAIL
	28	175	SW1	"MANUAL" START
	29	225	IFT	V SENSE GEN B PH
	30	406	AVR–10	AVR ZERO CROSSING I/P
	31	194	AVR–2	AVR +12VDC
	33	OC7	RB3A–5	SPARE OUTPUT 3
	34	399B	CT2	GEN B PH CURRENT–
	35	398B	CT2	GEN B PH CURRENT+

* – CONNECTIONS NOT USED IN 1ø UNITS.

NOTES:

1) WIRE# 0 IS CHASSIS GROUND (BATTERY–) UNLESS NOTED OTHERWISE.
2) WIRE# 13 IS UNFUSED +12VDC (BATTERY+).
3) WIRE# 14 IS FUSED +12VDC WHEN GENERATOR IS CRANKING OR RUNNING.
4) WIRE# 15 IS FUSED +12VDC WHEN E–STOP IS NOT ACTIVATED.
5) WIRE# 15A IS FUSED +12VDC FOR GENERAL USE.
6) WIRE# 15B IS FUSED +12VDC FOR THE GENERATOR CONTROL MODULE.
7) WIRE# 15C IS FUSED +12VDC TO SOURCE SWITCHED POWER FOR ENGINE CONTROL UNIT
8) WIRE# 15D IS FUSED +12VDC FOR ENGINE CONTROL UNIT.
9) WIRE# 15E IS FUSED +12VDC CONTROLLED BY GENERATOR CONTROL MODULE PRIOR TO E–STOP.
10) WIRE# 15F IS FUSED +12VDC CONTROLLED BY GENERATOR CONTROL MODULE TO SWITCH ENGINE CONTROL UNIT.
11) WIRE# 15G IS SWITCHED +12VDC TO SOURCE START COMMAND INPUT ON ENGINE CONTROL UNIT.

SCHEMATIC - DIAGRAM
D6.7L G17 12V W/CAN BUS
DRAWING #: 0H9883

REVISION: -A-
DATE: 7/9/10

H-PANEL CONTROL INTERCONNECTIONS

Notes:

1. Spare Outputs are Standard on Industrial Product Only. GenLink® Required for Programming. Contacts Rated at 5A at 30VAC/30VDC
2. TB4 Max Wire Size: #10 AWG, Recommended Tightening Torque: 14 LB-IN
3. TB1, TB2, TB9 & RB3 Max Wire Size: #14 AWG, Recommended Tightening Torque: 12 LB-IN
4. Refer to H-Panel Manual for Instructions on Enabling HTS Transfer Switch. Refer to HTS Transfer Switch Manual for Dip Switch Settings for Multiple HTS Application
5. Connect the RS-485 Overall Shield at Genset Connection Terminal Only

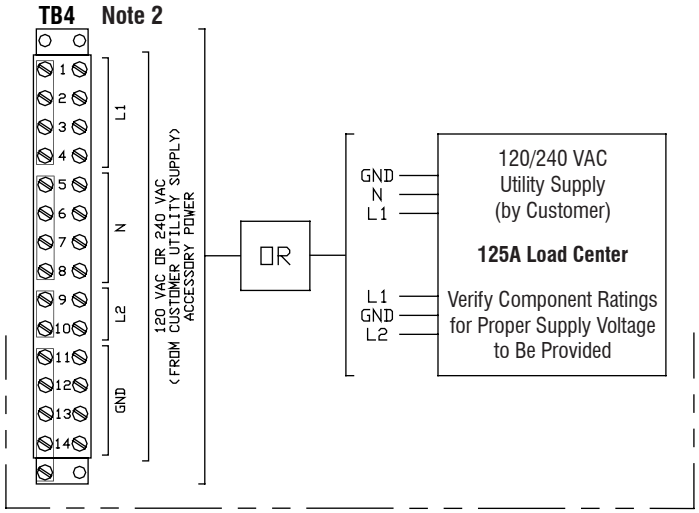

High Voltage Connection Panel

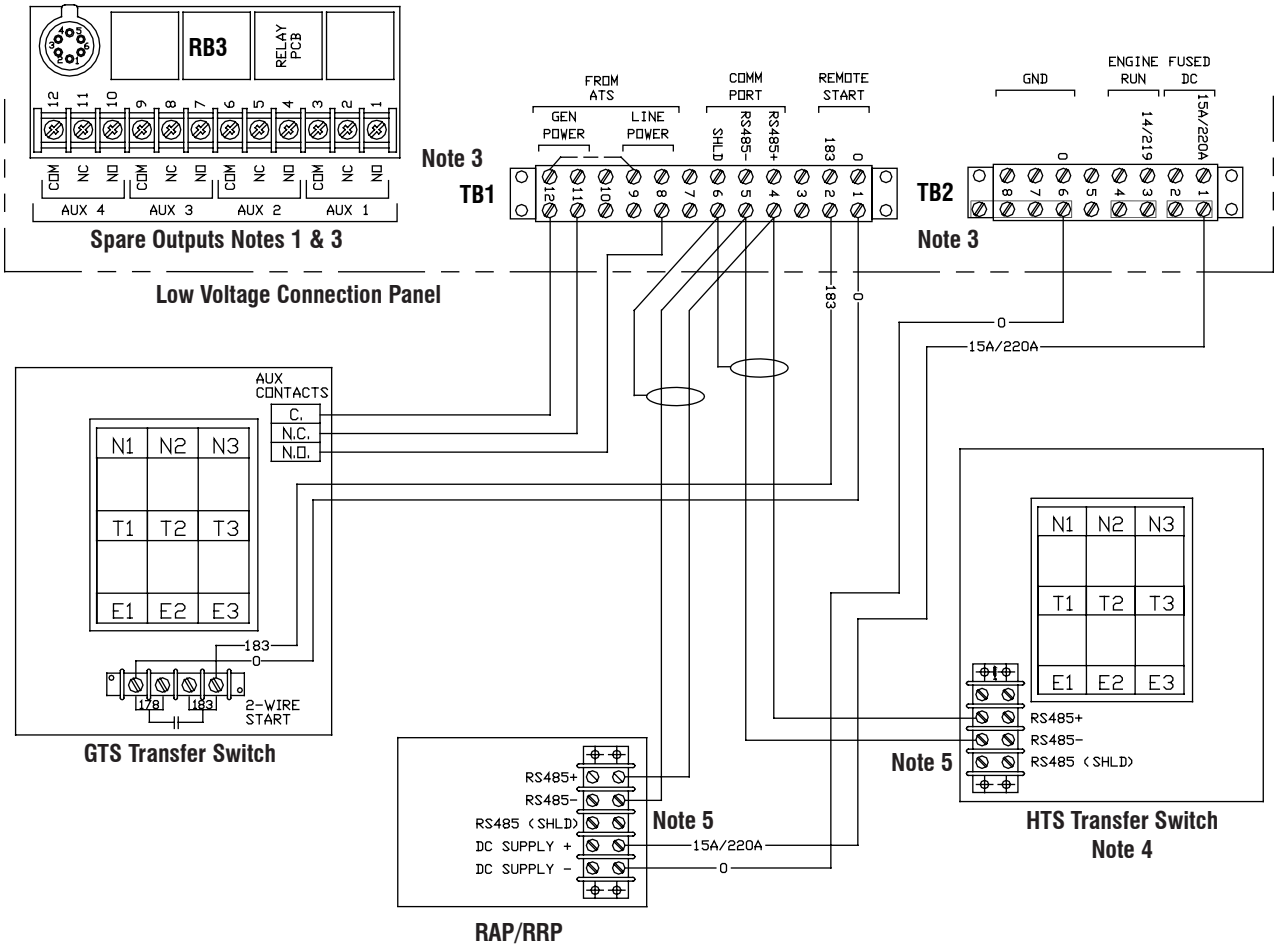

Generac Power Systems, Inc. | P.O. Box 8 | Waukesha, WI 53187
P: (262) 544-4811 © 2019 Generac Power Systems, Inc. All rights reserved. All specifications are subject to change without notice.

Part No. 0191120SSD
Rev. E 11/19/19

OPEN SET
D6.7L FPT, SD175

MICROPHONE LOCATION	60Hz NO-LOAD, dB(A) — DISTANCE: 7 METERS									
	OCTAVE BAND CENTER FREQUENCY (Hz)									
	31.5	63	125	250	500	1,000	2,000	4,000	8,000	dB(A)
FRONT	40	62	72	76	80	82	80	78	74	**87**
RIGHT	33	54	74	74	83	84	80	79	75	**88**
REAR	38	58	73	73	82	78	74	71	66	**85**
LEFT	35	57	74	73	83	81	80	79	75	**88**
AVERAGE	**37**	**58**	**73**	**74**	**82**	**81**	**78**	**76**	**72**	**87**

MICROPHONE LOCATION	60Hz FULL-LOAD, dB(A) — DISTANCE: 7 METERS									
	OCTAVE BAND CENTER FREQUENCY (Hz)									
	31.5	63	125	250	500	1,000	2,000	4,000	8,000	dB(A)
FRONT	39	67	73	75	81	81	79	77	74	**86**
RIGHT	30	57	74	75	83	82	82	80	78	**89**
REAR	36	62	73	73	82	78	75	72	69	**85**
LEFT	31	62	75	74	84	81	83	79	76	**89**
AVERAGE	**34**	**62**	**74**	**74**	**82**	**80**	**80**	**77**	**74**	**87**

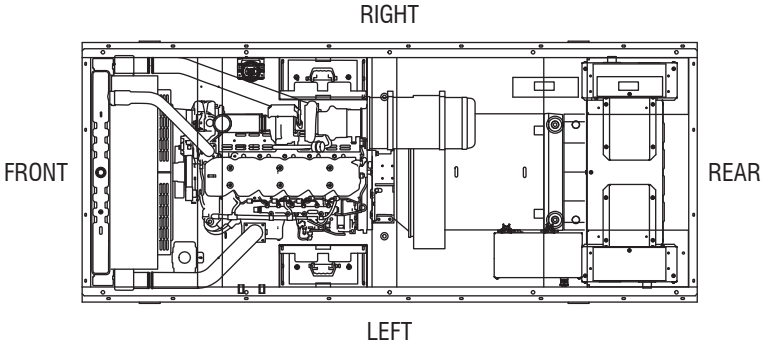

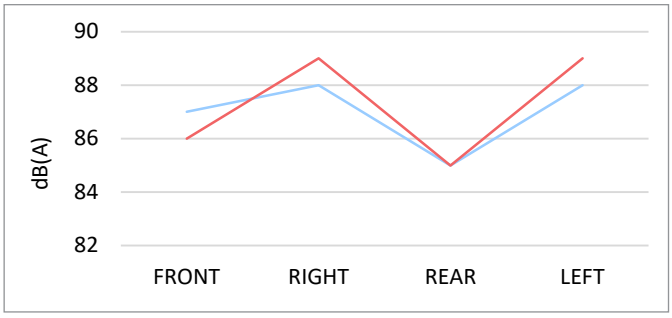

- All positions at 23 feet (7 meters) from side faces of generator set.
- Test conducted on a 100 foot diameter asphalt surface.
- Sound pressure levels are subject to instrumentation, installation and testing conditions.
- Open set sound data excludes exhaust contribution.
- Sound levels are ±2 dB(A).

Generac Power Systems, Inc. | P.O. Box 8 | Waukesha, WI 53187
P: (262) 544-4811 © 2020 Generac Power Systems, Inc. All rights reserved. All specifications are subject to change without notice.

Part No. 0185140SSD
Rev. C 7/13/20

STANDARD ENCLOSURE
SD175 6.7L IVECO

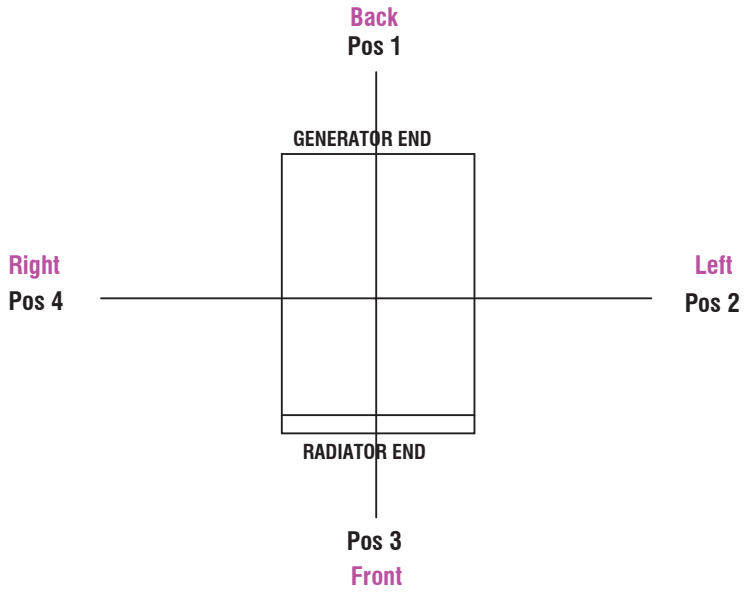

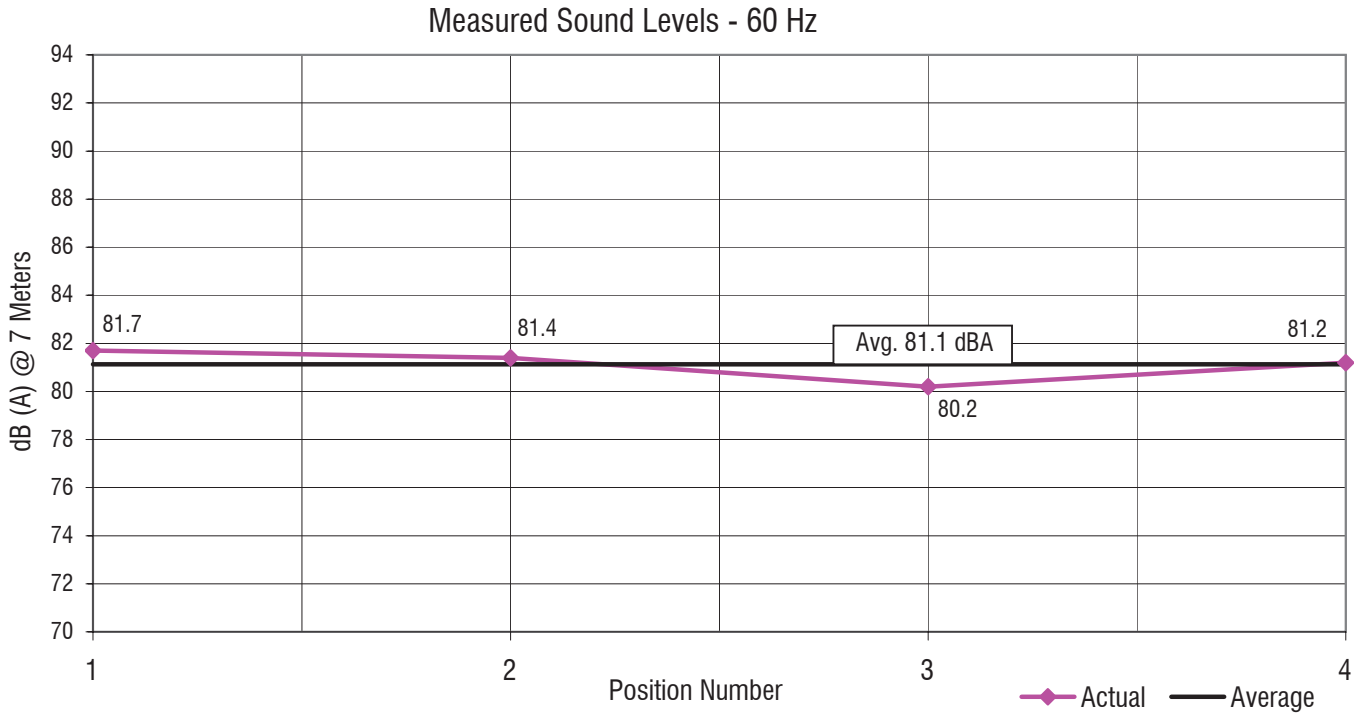

Notes:

1. All positions 23 ft (7M) from side faces of generator set.
2. Generator operating at full load.
3. Test conducted on a 100 foot diameter asphault surface.
4. Non-enclosed sets do not include exhaust sound during testing.

Generac Power Systems, Inc. | P.O. Box 8 | Waukesha, WI 53187
P: (262) 544-4811 © 2015 Generac Power Systems, Inc. All rights reserved. All specifications are subject to change without notice.

Part No. 0185150SSD
Rev. B 05/18/15

STATEMENT OF EXHAUST EMISSIONS
2021 FPT Diesel Fueled Generator

The measured emissions values provided here are proprietary to Generac and it's authorized dealers. This information may only be disseminated upon request to regulatory governmental bodies for emissions permitting purposes or to specifying organizations as submittal data when expressly required by project specifications, and shall remain confidential and not open to public viewing. This information is not intended for compilation or sales purposes and may not be used as such, nor may it be reproduced without the expressed written permission of Generac Power Systems, Inc.. The data provided shall not be meant to include information made public by Generac.

Generator Model:	**SD175**	EPA Certificate Number:	**MFPXL06.7DGS-002**
kW_e Rating:	**175**	CARB Certificate Number:	**Not Applicable**
Engine Family:	**MFPXL06.7DGS**	SCAQMD CEP Number:	**511717**
Engine Model:	**F4HE9685A*J**	Emission Standard Category:	**Tier 3**
Rated Engine Power (BHP)*:	**279**	Certification Type:	**Stationary Emergency CI (40 CFR Part 60 Subpart IIII)**
Fuel Consumption (gal/hr)*:	**13.5**		
Aspiration:	**Turbocharged/Aftercooled**		
Rated RPM:	**1,800**		

*Engine power and fuel consumption are declared by the engine manufacturer of record and the U.S EPA.

EMISSIONS BASED ON ENGINE POWER OF SPECIFIC ENGINE MODEL

These Values Are Actual Composite Weighted Exhaust Emissions Results Over the EPA 5-Mode Test Cycle

CO	NOx + NMHC	PM	
1.1	**3.71**	**0.08**	Grams/kW-hr
0.82	**2.77**	**0.06**	Grams/bhp-hr

- The stated values are actual exhaust emission test measurements obtained from an engine representative of the type described above.
- Values based on 5-Mode testing are official data of record as submitted to regulatory agencies for certification purposes. Testing was conducted in accordance with prevailing EPA protocol, which is typically accepted by SCAQMD and other regional authorities.
- No emissions values provided above are to be construed as guarantees of emission levels for any given Generac generator unit.
- Generac Power Systems, Inc. reserves the right to revise this information without prior notice.
- Consult state and local regulatory agencies for specific permitting requirements.
- The emission performance data supplied by the equipment manufacturer is only one element required toward completion of the permitting and installation process. State and local regulations may vary on a case-by-case basis and local agencies must be consulted by the permit application/equipment owner prior to equipment purchase or installation. The data supplied herein by Generac Power Systems Inc. cannot be construed as a guarantee of installability of the generating set.

Generac Power Systems, Inc. | P.O. Box 8 | Waukesha, WI 53187
P: (262) 544-4811 © 2021 Generac Power Systems, Inc. All rights reserved. All specifications are subject to change without notice.

Part No. A0001316718
Rev. A 1/13/21

	UNITED STATES ENVIRONMENTAL PROTECTION AGENCY **2021 MODEL YEAR** **CERTIFICATE OF CONFORMITY** **WITH THE CLEAN AIR ACT**	**OFFICE OF TRANSPORTATION** **AND AIR QUALITY** **ANN ARBOR, MICHIGAN 48105**

Certificate Issued To: FPT Industrial S.p.A. (U.S. Manufacturer or Importer) **Certificate Number: MFPXL06.7DGS-002**	**Effective Date:** **05/26/2020** **Expiration Date:** **12/31/2021**	**Byron J. Bunker, Division Director** **Compliance Division**	**Issue Date:** **05/26/2020** **Revision Date:** **N/A**

Model Year: 2021 **Manufacturer Type:** Original Engine Manufacturer **Engine Family:** MFPXL06.7DGS	**Mobile/Stationary Indicator:** Stationary **Emissions Power Category:** 130<=kW<225 **Fuel Type:** Diesel **After Treatment Devices:** No After Treatment Devices Installed **Non-after Treatment Devices:** No Non-After Treatment Devices Installed

Pursuant to Section 111 and Section 213 of the Clean Air Act (42 U.S.C. sections 7411 and 7547) and 40 CFR Part 60, and subject to the terms and conditions prescribed in those provisions, this certificate of conformity is hereby issued with respect to the test engines which have been found to conform to applicable requirements and which represent the following engines, by engine family, more fully described in the documentation required by 40 CFR Part 60 and produced in the stated model year.

This certificate of conformity covers only those new compression-ignition engines which conform in all material respects to the design specifications that applied to those engines described in the documentation required by 40 CFR Part 60 and which are produced during the model year stated on this certificate of the said manufacturer, as defined in 40 CFR Part 60.

It is a term of this certificate that the manufacturer shall consent to all inspections described in 40 CFR 1068 and authorized in a warrant or court order. Failure to comply with the requirements of such a warrant or court order may lead to revocation or suspension of this certificate for reasons specified in 40 CFR Part 60. It is also a term of this certificate that this certificate may be revoked or suspended or rendered void *ab initio* for other reasons specified in 40 CFR Part 60.

This certificate does not cover engines sold, offered for sale, or introduced, or delivered for introduction, into commerce in the U.S. prior to the effective date of the certificate.

The actual engine power may lie outside the limits of the Emissions Power Category shown above. See the certificate application for details.

Certification of Quality

Generac Power Systems certifies that the products we manufacture have been built and tested in accordance with strict internal and external standards for quality. Our quality management system has been registered with the internationally recognized ISO 9001:2008 standard and our products comply with external standards that include, but are not limited to, CSA, NEMA, EGSA, ISO, and UL.

The Generac Quality Management System (GQMS) ensures the highest standards of quality at every level of production, from raw materials to the finished product. This includes receiving inspection, in-process checks, product and process audits, testing, final inspections, and shipping standards.

Tests of our products are performed in accordance with our internal procedures and controlled through the GQMS to ensure accuracy and effectiveness. The testing process and product designs comply with external standards which may include, but are not limited to: ISO 8528-5, ISO 3046, NFPA 99, NFPA 110, BS 5514, SAE J1349, and DIN 6271.

Generac Power Systems has over one million square feet of manufacturing space and over 2000 employees dedicated to designing and manufacturing power generation equipment in our multiple State of Wisconsin, USA factories. All of our installed and mobile generators are built with pride by our skilled American workforce to ensure our customers receive the quality that they expect from Generac.

We are committed to producing quality products for both our internal and external customers. We will continuously improve our processes and diligently measure all aspects of our business.

Daniel Waschow

Vice President of Quality
Generac Power Systems, Inc.
Waukesha, Wisconsin USA

 © 2015 Generac Power Systems, Inc. All rights reserved. All specifications are subject to change without notice.

Generac Power Systems 2 Year (2B) Limited Warranty for Industrial Standby Generators

For the period of warranty noted below, which begins upon the successful start-up and/or on-line activation of the unit, Generac Power Systems, Inc. “Generac” warrants that its Generator will be free from defects in material and workmanship for the items and period set forth below. Generac will, at its discretion, repair or replace any part(s) which, upon evaluation, inspection and testing by Generac or an Independent Authorized Service Dealer, is found to be defective. Any equipment that the purchaser/owner claims to be defective must be evaluated by the nearest Independent Authorized Service Dealer. Emissions components are excluded from coverage under this extended warranty. Emissions warranty coverage is detailed in a separate emissions warranty.

Warranty Coverage: Warranty coverage period is for Two (2) years or two-thousand (2,000) hours, whichever occurs first.

Warranty Coverage in Year(s): 1	Warranty Coverage in Year(s): 2
Parts, Labor and Limited Travel	Limited Parts Only

Limited Gearbox Coverage:

Year(s): 1-5 Coverage	Year(s): 6-10 Coverage
Limited Parts and Labor	Limited Parts Only

Guidelines:

1. Unit must be registered and proof of purchase available.
2. Any and all warranty repairs and/or concerns must be performed and/or addressed by an Independent Authorized Service Dealer, or branch thereof. Repairs or diagnostics performed by individuals other than Independent Authorized Service Dealers not authorized in writing by Generac will not be covered.
3. This Warranty is transferable between ownership of original install site.
4. Generac supplied engine coolant heaters (block-heaters), heater controls and circulating pumps are only covered during the first year of the warranty provision.
5. Generac may choose to repair, replace or refund a piece of equipment in its sole discretion.
6. Enclosures are warranted against rust for the first year of ownership only. Damage caused after receipt of generator is the responsibility of the owner and is not covered by this warranty. Nicks, scrapes, dents or scratches to the painted enclosure should be repaired promptly by the owner.
7. Warranty only applies to permanently wired and mounted units.
8. Damage to any covered components or consequential damages caused by the use of a non-OEM part will not be covered by the warranty.
9. Proof of performance of all required maintenance must be available.
10. Travel allowance is limited to 300 miles maximum and seven and one half (7.5) hours maximum (per occurrence, whichever is less) round trip from the nearest Independent Authorized Service Dealer. Any additional travel required will not be covered.
11. Engines, driven components and fuel tanks used in Generac’s standby power products system can carry a separate manufacturer’s (OEM) warranty (the “OEM Warranties”), unless otherwise expressly stated. OEM Warranties are in addition to this Warranty. All warranty claims for defects in material and/or workmanship on Generac product OEM components, may be directed through the OEM distributor/dealer network. OEM Warranties may vary and are subject to change. Generac shall have no liability under OEM warranties.

The following will NOT be covered by this warranty:

1. Costs of normal maintenance (i.e. tune-ups, associated part(s), adjustments, loose/leaking clamps, installation and start-up).
2. Damage/failures to the generator and/or transfer switch system caused by accidents, shipping, handling, or improper storage.
3. Damage/failures caused by operation with improper fuels, speeds, loads or installations other than what’s recommended or specified by Generac Power Systems.
4. Damage to the generator and/or transfer switch due to the use of non-Generac parts and/or equipment, contaminated fuels, oils, coolants/antifreeze or lack of proper fuels, oil or coolants/antifreeze.
5. Failures due to normal wear and tear, accident, misuse, abuse, neglect, improper installation, improper sizing, or rodent, reptile, and/or insect infestation.
6. Rental equipment used while warranty repairs are being performed and/or any extraordinary equipment used for removal and/or reinstallation of generator (i.e. cranes, hoists, lifts, et. al.).
7. Planes, ferries, railroad, buses, helicopters, snowmobiles, snow-cats, off-road vehicles or any other mode of transport deemed not standard by Generac.
8. Products that are modified or altered in a manner not authorized by Generac in writing.
9. Starting batteries, fuses, light bulbs, engine fluids and any related labor.
10. Steel enclosures that rust as a result of improper installation, location in a harsh or salt water environment, or are scratched where the integrity of applied paint is compromised.
11. Units sold, rated or used for "Prime Power", "Trailer Mounted" or "Rental Unit" applications as defined by Generac. Contact an Independent Authorized Service Dealer for definitions.
12. Shipping costs associated with expedited shipping.
13. Additional costs for overtime, holiday or emergency labor costs for repairs outside of normal business hours.
14. Any incidental, consequential or indirect damages caused by defects in materials or workmanship, or any delay in repair or replacement of the defective part(s).
15. Failures caused by any act of God or external cause including without limitation, fire, theft, freezing, war, lightning, earthquake, windstorm, hail, water, tornado, hurricane, or any other matters which are reasonably beyond the manufacturer’s control.

THIS WARRANTY SUPERSEDES ALL OTHER WARRANTIES, EXPRESSED OR IMPLIED. SPECIFICALLY, GENERAC MAKES NO OTHER WARRANTIES AS TO THE MERCHANTABILITY OR FITNESS FOR A PARTICULAR PURPOSE. ANY IMPLIED WARRANTIES WHICH ARE ALLOWED BY LAW, SHALL BE LIMITED IN DURATION TO THE TERMS OF THE EXPRESS WARRANTY PROVIDED HEREIN. SOME JURISDICTIONS DO NOT ALLOW LIMITATIONS ON HOW LONG AN IMPLIED WARRANTY LASTS, SO THE ABOVE LIMITATION MAY NOT APPLY TO YOU. GENERAC'S ONLY LIABILITY SHALL BE THE REPAIR OR REPLACEMENT OF PART(S) AS STATED ABOVE. IN NO EVENT SHALL GENERAC BE LIABLE FOR ANY INCIDENTAL OR CONSEQUENTIAL DAMAGES, EVEN IF SUCH DAMAGES ARE A DIRECT RESULT OF GENERAC’S NEGLIGENCE. SOME JURISDICTIONS DO NOT ALLOW THE EXCLUSION OR LIMITATION OF INCIDENTAL OR CONSEQUENTIAL DAMAGES, SO THE ABOVE LIMITATION MAY NOT APPLY TO YOU. THIS WARRANTY GIVES YOU SPECIFIC LEGAL RIGHTS. YOU ALSO HAVE OTHER RIGHTS UNDER APPLICABLE LAW.

FOR AUSTRALIA ONLY: Our goods come with guarantees that cannot be excluded under the Australian Consumer Law. You are entitled to a replacement or refund for a major failure and for compensation for any other reasonably foreseeable loss or damage. You are also entitled to have the goods repaired or replaced if the goods fail to be of acceptable quality and the failure does not amount to a major failure.
FOR NEW ZEALAND ONLY: Nothing in this warranty statement excludes, restricts or modifies any condition, warranty right or remedy which pursuant to the New Zealand Legislation (Commonwealth or State) including the Fair Trading Practices Act of 1986 or the Consumer Guarantees Act 1993 (“CGA”) applies to this limited warranty and may not be so excluded, restricted or modified. Nothing in this statement is intended to have the effect of contracting out of the provisions of the CGA, except to the extent permitted by that Act, and these terms are to be modified to the extent necessary to give effect to that intention. If you acquire goods from Generac Power Systems or any of its authorized resellers and distributors for the purposes of a business, then pursuant to section 43(2) of the CGA, it is agreed that the provisions of the CGA do not apply.

GENERAC POWER SYSTEMS, INC. • P.O. BOX 8 • Waukesha, WI, USA 53187
Ph: (888) GENERAC (436-3722) • Fax: (262) 544-4851

To locate the nearest Independent Authorized Service Dealer and to download schematics, exploded views and parts lists
visit our website: www.generac.com

Part No. 0K3486 Revision E (2/16)

Garantía limitada de 2 años (2B) de Generac Power Systems para los generadores de respaldo industriales

Durante el período de garantía indicado abajo, que comienza desde la puesta en marcha y/o activación exitosa en línea de la unidad, Generac Power Systems, Inc. "Generac" garantiza que generador estará libre de defectos de material y/o mano de obra para los ítems y el período indicados a continuación. Generac, a su discreción, reparará o sustituirá cualquier pieza o piezas que, por medio de la evaluación, inspección y prueba efectuada por Generac o un Concesionario de servicio autorizado independiente de Generac, se determine que es o son defectuosa(s). Todo equipo que el comprador o propietario reclame como defectuoso debe ser evaluado por el Concesionario de servicio autorizado independiente de Generac más cercano. Los componentes relacionados con emisiones están excluidos de la cobertura bajo esta garantía extendida. La cobertura de la garantía de emisiones se detalla por separado en una garantía de emisiones.

Cobertura de la garantía: El período de cobertura de la garantía es de dos (2) años o dos mil (2000) horas, lo que ocurra primero.

Cobertura de la garantía en el o los año(s): 1	Cobertura de la garantía en el o los año(s): 2
Sobre piezas, mano de obra y gastos de viaje limitados	Limitada solo sobre piezas

Cobertura limitada sobre la caja de engranajes:

Año(s) de cobertura: 1-5 Cobertura	Año(s) de cobertura: 6-10 Cobertura
Limitada sobre piezas y mano de obra	Limitada solo sobre piezas

Directrices:

1. La unidad debe estar registrada y tener prueba de compra disponible.
2. Cualquiera y todas las reparaciones y/o preocupaciones por garantía deben ser efectuadas y/o dirigidas por un Concesionario de servicio autorizado independiente de Generac, o una sucursal de este. No serán cubiertas las reparaciones o los diagnósticos efectuados por personas diferentes de los Concesionarios de servicio autorizados independientes de Generac no autorizados por escrito por Generac.
3. Esta garantía es transferible entre propietarios del sitio de instalación original.
4. Los calentadores de refrigerante de motor (calentadores de bloque), los controles del calentador y las bombas de circulación suministrados por Generac solo están cubiertos durante el primer año de prestación de la garantía.
5. Generac puede elegir reparar, sustituir o reembolsar una pieza del equipo a su exclusiva discreción.
6. Los gabinetes están garantizados contra corrosión solamente durante el primer año de propiedad. El daño causado después de la recepción del generador es responsabilidad del comprador y no está cubierto por esta garantía. Las muescas, raspaduras, abolladuras o rayaduras de gabinete pintado deben ser reparadas sin demora por el propietario.
7. La garantía corresponde solamente a las unidades conectadas y montadas en forma permanente.
8. Los daños a cualquier componente o los daños emergentes causados por el uso de una pieza que no sea OEM no estarán cubiertos por la garantía.
9. Debe haber disponible prueba de la ejecución de todo el mantenimiento requerido.
10. Las asignaciones para viaje están limitadas a 300 millas como máximo y siete horas y media (7.5) horas como máximo (por ocurrencia, lo que sea menor), viaje de ida y vuelta, desde el Concesionario de servicio autorizado independiente de Generac más cercano. Todo gasto de viaje adicional requerido no será cubierto.
11. Los motores, los componentes accionados y los tanques de combustible usados en los productos de respaldo de Generac pueden llevar una garantía de fabricante (OEM) separada (las "Garantías de OEM"), a menos que se estipule expresamente lo contrario. Las garantías de OEM son un agregado a esta garantía. Todos los reclamos de garantía por defectos de material y/o mano de obra en los componentes OEM del producto Generac, pueden ser dirigidos a través de la red de distribuidores/concesionarios OEM. Las garantías de OEM pueden variar y están sujetas a cambios. Generac no tendrá responsabilidad bajo las garantías de OEM.

Lo siguiente NO será cubierto por esta garantía:

1. Costes del mantenimiento normal (es decir: afinaciones, pieza[s] relacionada[s], ajustes, abrazaderas sueltas o con fugas, instalación y puesta en marcha).
2. Daños/fallos del sistema de generador y/o interruptor de transferencia causados por accidentes, envío, manipulación, o almacenamiento incorrecto.
3. Los daños/fallos causados por la operación con combustibles, velocidades, cargas, o instalaciones incorrectas diferentes de las recomendadas o especificadas por Generac Power Systems.
4. Los daños al generador y/o el interruptor de transferencia debidos al uso de piezas y/o equipos que no sean de Generac; combustibles, aceites, refrigerantes/anticongelantes contaminados; o falta de combustibles, aceites, refrigerantes/anticongelantes apropiados.
5. Fallos debidos a: desgaste y daño normal, accidente, uso indebido, abuso, negligencia, instalación incorrecta, dimensionamiento incorrecto, o plagas de roedores y/o insectos.
6. Equipos arrendados usados mientras se llevan a cabo reparaciones de garantía y/o todos los equipos extraordinarios usados para retirar y/o reinstalar el generador, (esto es: grúas, malacates, elevadores, etc.).
7. Aeronaves, transbordadores, ferrocarril, autobuses, helicópteros, motocicletas para nieve, camiones para nieve, vehículos fuera de ruta o cualquier otro modo de transporte no considerado estándar por Generac.
8. Productos que se modifiquen o alteren en forma no autorizada por Generac por escrito.
9. Baterías de arranque, fusibles, bombillas de luz, fluidos para el motor y mano de obra relacionada.
10. Los gabinetes de acero que se corroen debido a instalación incorrecta, ubicación en un entorno agresivo o con agua salada, o se rayen donde esté comprometida la integridad de la pintura aplicada.
11. Las unidades vendidas, calificadas para, o usadas en aplicaciones de "Alimentación eléctrica principal", "Montada en remolque" o "Unidad en alquiler" como las define Generac. Comuníquese con un Concesionario de servicio autorizado independiente para las definiciones.
12. Costes de envío asociados con envío urgente.
13. Costes adicionales por horas extra y feriados o los costes de mano de obra de emergencia por reparaciones fuera del horario de trabajo normal.
14. Todos los daños accesorios, emergentes o indirectos causados por defectos en los materiales o mano de obra o toda demora en la reparación o sustitución de la(s) pieza(s) defectuosa(s).
15. Los fallos causados por cualquier acto de fuerza mayor o causa externa, que incluyen, sin limitaciones, incendio, robo, congelamiento, guerra, rayos, terremoto, tormenta de viento, granizo, agua, tornado, huracán, o cualesquiera otros asuntos que estén fuera del control razonable del fabricante.

ESTA GARANTÍA SUSTITUYE CUALQUIER OTRA GARANTÍA, EXPRESA O IMPLÍCITA. ESPECÍFICAMENTE, GENERAC NO EXTIENDE NINGUNA OTRA GARANTÍA ACERCA DE LA COMERCIALIZACIÓN O APTITUD PARA UN PROPÓSITO EN PARTICULAR. LA DURACIÓN DE TODAS LAS GARANTÍAS IMPLÍCITAS PERMITIDAS POR LA LEY ESTARÁ LIMITADA A LAS CONDICIONES DE LA GARANTÍA EXPRESA ESTIPULADA EN LA PRESENTE. ALGUNAS JURISDICCIONES NO PERMITEN LIMITACIONES DE LA DURACIÓN DE UNA GARANTÍA IMPLÍCITA; POR LO TANTO, LA LIMITACIÓN PRECEDENTE PUEDE NO APLICARSE A USTED. LA ÚNICA RESPONSABILIDAD DE GENERAC SERÁ REPARAR O SUSTITUIR LA(S) PIEZA(S) COMO SE ESTIPULÓ PRECEDENTEMENTE. GENERAC NO SERÁ RESPONSABLE EN NINGÚN CASO POR NINGÚN DAÑO ACCESORIO O EMERGENTE, AUN CUANDO TAL DAÑO SEA RESULTADO DIRECTO DE LA NEGLIGENCIA DE GENERAC. ALGUNAS JURISDICCIONES NO PERMITEN LA EXCLUSIÓN O LIMITACIÓN DE DAÑOS ACCESORIOS O EMERGENTES, DE MANERA QUE LA LIMITACIÓN PRECEDENTE PUEDE NO APLICARSE A USTED. ESTA GARANTÍA LE OTORGA DERECHOS LEGALES ESPECÍFICOS. TAMBIÉN TIENE OTROS DERECHOS BAJO LA LEY CORRESPONDIENTE.

SOLO PARA AUSTRALIA: Nuestros productos se entregan con garantías que no pueden ser excluidas según la Australian Consumer Law (Ley australiana de consumidores). Usted tiene derecho a sustitución o reembolso por un fallo mayor y a compensación por cualquier otra pérdida o daño razonable previsible. Usted también tiene derecho a que los bienes sean reparados o sustituidos si los bienes no son de calidad aceptable y la falla no llega a ser un fallo mayor.
SOLO PARA NUEVA ZELANDA: Nada de esta declaración de garantía excluye, restringe o modifica ninguna condición, derecho de garantía o solución que, conforme a la legislación de Nueva Zelanda (Comunidad o Estado), incluso la Fair Trading Practices Act (Ley de transacciones comerciales justas) de 1986 o la Consumer Guarantees Act (Ley de garantías de los consumidores, "CGA") de 1993, se aplique a esta garantía limitada y por lo tanto no puede ser sometida a exclusiones, restricciones o modificaciones. Nada de esta declaración tiene el propósito de tener efecto de contratar fuera de las previsiones de la CGA, excepto con el alcance permitido por la ley y estos términos se deben modificar con el alcance necesario para hacer efectiva esta intención. Si adquiere bienes de Generac Power Systems o alguno de sus revendedores y distribuidores autorizados con propósitos comerciales, entonces, conforme a la sección 43(2) de la CGA, se acuerda que no se aplican las previsiones de la CGA.

GENERAC POWER SYSTEMS, INC. • P.O. BOX 8 • Waukesha, WI 53187, EE. UU.
Tel.: (888) GENERAC (436-3722) • Fax: (262) 544-4851

Para ubicar el Concesionario de servicio autorizado independiente más cercano y descargar diagramas esquemáticos, despieces y listas de piezas
visite nuestro sitio Web: www.generac.com

Núm. de pieza 0K3486 Revisión E (02/16)

Garantie limitée de 2 ans (2B) de Generac Power Systems sur les générateurs de secours industriels

Pendant la période de garantie mentionnée ci-bas, qui débute dès le démarrage réussi de l'appareil ou l'activation en ligne de l'appareil, Generac Power Systems, Inc. (Generac) garantit que son générateur sera exempt de vices de matériaux et fabrication en ce qui concerne les éléments et la période indiqués ci-dessous. À sa seule discrétion, Generac réparera ou remplacera toute pièce qui est jugée défectueuse après l'évaluation, l'inspection et la mise à l'essai par Generac ou un fournisseur de services d'entretien agréé indépendant. Tout équipement que l'acheteur/propriétaire prétend être défectueux doit être évalué par le fournisseur de services d'entretien agréé indépendant le plus près. Les composantes relatives aux émissions ne sont pas couvertes en vertu de la présente garantie. La couverture des composantes relatives aux émissions est détaillée dans une garantie distincte.

Couverture de la garantie : La période de garantie est de deux (2) ans ou de deux mille (2000) heures, selon la première éventualité.

Période de garantie : 1	Période de garantie : 2
Pièces, main-d'œuvre et couverture limitée des déplacements	Couverture limitée – pièces seulement

Couverture limitée de la boîte à engrenages :

Période : couverture de 1 à 5 ans	Période : couverture de 6 à 10 ans
Couverture limitée – pièces et main-d'œuvre	Couverture limitée – pièces seulement

Lignes directrices :

1. L'appareil doit être enregistré et la preuve d'achat doit être présentée sur demande.
2. Toute réparation sous garantie doit être effectuée par un fournisseur de services d'entretien agréé indépendant ou l'une de ses succursales, et toute préoccupation doit être également traitée par un fournisseur de services d'entretien agréé indépendant de Generac ou l'une de ses succursales. Toute réparation ou évaluation effectuée par des personnes autres que des fournisseurs de services d'entretien agréés indépendants qui n'a pas été autorisée par écrit par Generac ne sera pas couverte.
3. La présente garantie est transférable conjointement à la propriété du site d'installation d'origine.
4. Les chaufferettes à liquide de refroidissement du moteur (chauffe-moteur), les commandes de chauffage et les pompes de circulation fournies par Generac ne sont couvertes que pendant la première année de la période de garantie.
5. Generac peut choisir, à sa seule discrétion, de réparer, de remplacer ou de rembourser une pièce d'équipement.
6. Les boîtiers sont garantis contre la rouille pendant la première année de possession seulement. Les dommages causés après la réception du générateur sont la responsabilité du propriétaire et ne sont pas couverts par la présente garantie. Les entailles, éraflures, bosses ou égratignures au boîtier peint doivent être réparées sans délai par le propriétaire.
7. La garantie s'applique uniquement aux appareils montés et câblés en permanence.
8. Aucun dommage ou dommage indirect à toute pièce couverte découlant de l'utilisation de pièces non fabriquées par un fabricant d'équipement d'origine ne sera couvert par la garantie.
9. Une preuve d'exécution de tous les travaux d'entretien requis doit être présentée sur demande.
10. La présente garantie couvre les déplacements aller-retour d'un maximum de 480 km (300 miles) et de sept heures et demie (7,5) (par déplacement, selon le moindre des deux) à partir du fournisseur de services d'entretien agréé indépendant le plus près. Tout déplacement supplémentaire requis ne sera pas couvert.
11. Les moteurs, les pièces d'entraînement et les réservoirs de carburant utilisés dans les systèmes d'alimentation de secours de Generac peuvent être protégés au titre de la garantie d'un fabricant d'équipement distinct (les « garanties des fabricants d'équipement d'origine »), sauf indication expresse à l'effet contraire. Les garanties des fabricants d'équipement d'origine s'ajoutent à la présente garantie. Toute réclamation au titre de la garantie pour vices de matériaux ou de fabrication de pièces d'un fabricant d'équipement d'origine sur un produit Generac peut être faite auprès du distributeur ou du réseau de fournisseurs de ce fabricant d'équipement d'origine. Les garanties des fabricants d'équipement d'origine peuvent varier et faire l'objet de modifications. Generac n'a aucune responsabilité découlant des garanties offertes par les fabricants d'équipement d'origine.

Les éléments suivants ne seront PAS couverts par la présente garantie :

1. Les coûts d'entretien normal (c'est-à-dire mises au point, réglages de pièces associées, ajustements, resserrage de fixations, installation et démarrage).
2. Les dommages ou défaillances du générateur et/ou du commutateur de transfert causés par un accident, le transport, la manutention ou un entreposage inadéquat.
3. Les dommages/défaillances causés par l'utilisation de carburants inappropriés ou l'utilisation à des vitesses, avec des charges ou selon une installation autres que ce qui est recommandé ou spécifié par Generac Power Systems.
4. Les dommages au générateur et/ou au commutateur de transfert causés par l'utilisation de pièces ou d'équipement non fabriqués par Generac, de carburant, d'huile, de liquide de refroidissement et d'antigel contaminé ou encore du manque de carburant, d'huile, de liquide de refroidissement et d'antigel.
5. Les défaillances causées par l'usure normale, un accident, une utilisation inappropriée, une utilisation abusive, une négligence, une installation inadéquate, un dimensionnement inadéquat ou une infestation de rongeurs, de reptiles ou d'insectes.
6. L'équipement de location utilisé pendant que des réparations sous garantie sont effectuées et/ou tout équipement extraordinaire utilisé pour retirer ou réinstaller le générateur (c'est-à-dire grues, appareils de levage, élévateurs, etc.).
7. Les avions, les traversiers, les trains, les autobus, les hélicoptères, les motoneiges, les dameuses, les véhicules hors route ou tout autre moyen de transport jugé non standard par Generac.
8. Les produits modifiés ou altérés d'une manière qui n'a pas été autorisée par écrit par Generac.
9. Les batteries de démarrage, les fusibles, les ampoules électriques, les fluides de moteur et toute main-d'œuvre connexe.
10. Les boîtiers en acier qui rouillent en raison d'une installation inadéquate, d'une installation dans un environnement difficile ou salin ou d'égratignures qui compromettent l'intégrité de la peinture appliquée sur le boîtier.
11. Les appareils vendus, cotés ou utilisés selon les applications suivantes, telles qu'elles sont définies par Generac : « puissance électrique de base », « monté sur remorque » ou « unité de location ». Veuillez communiquer avec un fournisseur de services d'entretien agréé indépendant pour obtenir les définitions.
12. Les coûts d'expédition liés à l'expédition accélérée.
13. Les coûts supplémentaires liés aux heures supplémentaires, aux jours fériés ou aux services d'urgence pour toute réparation effectuée en dehors des heures normales de bureau.
14. Tout dommage accessoire, subséquent ou indirect causé par un défaut de matériau et de fabrication ou par tout retard dans la réparation ou le remplacement de pièces défectueuses.
15. Les défaillances causées par un cas de force majeure ou une cause externe y compris, sans toutefois s'y limiter, le feu, le vol, le gel, la guerre, la foudre, un tremblement de terre, une tempête, la grêle, la pluie, une tornade, un ouragan ou toute autre situation raisonnablement hors du contrôle du fabricant.

LA PRÉSENTE GARANTIE REMPLACE TOUTES LES AUTRES GARANTIES, EXPLICITES OU IMPLICITES. EN PARTICULIER, GENERAC N'OFFRE AUCUNE AUTRE GARANTIE QUANT À LA QUALITÉ MARCHANDE OU À LA CONVENANCE À UN USAGE PARTICULIER. TOUTE GARANTIE IMPLICITE AUTORISÉE PAR LA LOI SERA LIMITÉE À LA DURÉE DE LA PÉRIODE DE LA PRÉSENTE GARANTIE EXPLICITE. CERTAINS ÉTATS OU PROVINCES NE PERMETTENT PAS LES LIMITATIONS SUR LA DURÉE D'UNE GARANTIE IMPLICITE ET, PAR CONSÉQUENT, LA PRÉSENTE LIMITATION PEUT NE PAS S'APPLIQUER. LA RESPONSABILITÉ DE GENERAC SE LIMITERA À LA RÉPARATION OU AU REMPLACEMENT DES PIÈCES, COMME INDIQUÉ PRÉCÉDEMMENT. EN AUCUN CAS GENERAC NE POURRA ÊTRE TENUE RESPONSABLE DE DOMMAGES ACCESSOIRES OU SUBSÉQUENTS, MÊME SI LES DOMMAGES RÉSULTENT DIRECTEMENT DE LA NÉGLIGENCE DE GENERAC. CERTAINS ÉTATS OU PROVINCES N'AUTORISENT PAS L'EXCLUSION NI LA LIMITATION DES DOMMAGES ACCESSOIRES OU INDIRECTS ET, PAR CONSÉQUENT, LA LIMITATION ÉNONCÉE CI-DESSUS PEUT NE PAS S'APPLIQUER. CETTE GARANTIE VOUS CONFÈRE DES DROITS LÉGAUX PRÉCIS. VOUS POUVEZ ÉGALEMENT JOUIR D'AUTRES DROITS EN VERTU DES LOIS APPLICABLES.

POUR L'AUSTRALIE UNIQUEMENT : Nos produits sont fournis avec des garanties qui ne peuvent être exclues en vertu de la loi australienne sur la consommation (Australian Consumer Law). Vous avez droit à un remplacement ou à un remboursement pour une défaillance majeure et à une indemnisation pour toute autre perte ou tout dommage raisonnablement prévisible. Vous disposez également d'un droit à la réparation ou au remplacement si les produits ne sont pas d'une qualité acceptable et si cette défaillance n'est pas considérée comme majeure.
POUR LA NOUVELLE-ZÉLANDE UNIQUEMENT : Cette garantie n'exclut, ne restreint ni ne modifie aucune condition, aucun droit de garantie ou recours qui, conformément à la législation de Nouvelle-Zélande (Commonwealth ou État), y compris la loi sur la pratique commerciale loyale de 1986 (Fair Trading Practices Act) ou la loi sur la protection du consommateur de 1993 (CGA ou Consumer Guarantees Act), s'applique à cette garantie limitée et ne peut pas être exclue, restreinte ou modifiée. Cette garantie ne vise en aucun cas à contourner les dispositions de la CGA, sauf dans la mesure permise par cette loi, et ces termes doivent être modifiés dans la mesure nécessaire pour donner effet à cette intention. Si vous faites l'acquisition d'un produit de Generac Power Systems ou d'un de ses distributeurs et revendeurs autorisés à des fins commerciales, alors, conformément à l'article 43(2) de la CGA, il est convenu que les dispositions de la CGA ne s'appliquent pas.

GENERAC POWER SYSTEMS, INC. • C.P. 8 • Waukesha, WI (É.-U.) 53187
Téléphone : (888) GENERAC (436-3722) • Télécopieur : (262) 544-4851

Pour trouver le fournisseur de services d'entretien agréé indépendant le plus près et pour télécharger les schémas, les vues éclatées et les listes de pièces
visitez notre site Web : www.generac.com

CERTIFICATE

This is to certify that

Generac Power Systems, Inc.

S45 W29290 Hwy. 59
Waukesha, WI 53189
United States of America

with the organizational units/sites as listed in the annex

has implemented and maintains a **Quality Management System**.

Scope:
Design, Manufacturing, and Distribution of Generators and Power Products.

Through an audit, documented in a report, it was verified that the management system fulfills the requirements of the following standard:

ISO 9001 : 2015

Certificate registration no.	10012920 QM15
Date of original certification	2013-12-09
Date of certification	2018-07-16
Valid until	2021-07-15

DQS Inc.

Brad McGuire
Managing Director

Annex to certificate
Registration No. 10012920 QM15

Generac Power Systems, Inc.

S45 W29290 Hwy. 59
Waukesha, WI 53189
United States of America

Location	Scope
10012920 **Generac Power Systems, Inc.** **S45 W29290 Hwy. 59** **Waukesha, WI 53189** **United States of America**	Design, Manufacturing of Generator Components and Distribution of Service Parts.
10012922 **Generac Power Systems, Inc.** **211 Murphy Dr.** **Eagle, WI 53119** **United States of America**	Manufacturing and Distribution of Generators.
10012923 **Generac Power Systems, Inc.** **757 N. Newcomb St.** **Whitewater, WI 53190** **United States of America**	Manufacturing and Distribution of Generators and Manufacture of Generator components.
10012924 **Generac Power Systems, Inc.** **900 N. Parkway** **Jefferson, WI 53549** **United States of America**	Manufacturing of Generators and Power Products.
10013528 **Generac Power Systems** **3815 Oregon St.** **Oshkosh, WI 54902** **United States of America**	Manufacturing of Generators.

Remote Location	Scope
10014175 **Generac Power Systems, Inc.** **351 Collins Road** **Jefferson, WI 53549** **United States of America**	The remote location at Jefferson, WI performs the following primary functions: Parts and Components Receiving, Inventory, and Distribution to Generac Locations.

This annex (edition: 2018-07-16) is only valid in connection with the above-mentioned certificate.

Member of IQNet
THE INTERNATIONAL CERTIFICATION NETWORK

UNITED STATES ENVIRONMENTAL PROTECTION AGENCY
2019 MODEL YEAR
CERTIFICATE OF CONFORMITY
WITH THE CLEAN AIR ACT

OFFICE OF TRANSPORTATION AND AIR QUALITY
ANN ARBOR, MICHIGAN 48105

Certificate Issued To: **FPT Industrial S.p.A.** (U.S. Manufacturer or Importer) **Certificate Number: KFPXL06.7DGS-007**	**Effective Date:** 07/16/2018 **Expiration Date:** 12/31/2019	**Byron J. Bunker, Division Director** **Compliance Division**	**Issue Date:** 07/16/2018 **Revision Date:** N/A

Model Year: 2019 **Manufacturer Type:** Original Engine Manufacturer **Engine Family:** KFPXL06.7DGS	**Mobile/Stationary Indicator:** Stationary **Emissions Power Category:** 130<=kW<225 **Fuel Type:** Diesel **After Treatment Devices:** No After Treatment Devices Installed **Non-after Treatment Devices:** No Non-After Treatment Devices Installed

Pursuant to Section 111 and Section 213 of the Clean Air Act (42 U.S.C. sections 7411 and 7547) and 40 CFR Part 60, and subject to the terms and conditions prescribed in those provisions, this certificate of conformity is hereby issued with respect to the test engines which have been found to conform to applicable requirements and which represent the following engines, by engine family, more fully described in the documentation required by 40 CFR Part 60 and produced in the stated model year.

This certificate of conformity covers only those new compression-ignition engines which conform in all material respects to the design specifications that applied to those engines described in the documentation required by 40 CFR Part 60 and which are produced during the model year stated on this certificate of the said manufacturer, as defined in 40 CFR Part 60.

It is a term of this certificate that the manufacturer shall consent to all inspections described in 40 CFR 1068 and authorized in a warrant or court order. Failure to comply with the requirements of such a warrant or court order may lead to revocation or suspension of this certificate for reasons specified in 40 CFR Part 60. It is also a term of this certificate that this certificate may be revoked or suspended or rendered void *ab initio* for other reasons specified in 40 CFR Part 60.

This certificate does not cover engines sold, offered for sale, or introduced, or delivered for introduction, into commerce in the U.S. prior to the effective date of the certificate.

The actual engine power may lie outside the limits of the Emissions Power Category shown above. See the certificate application for details.

	UNITED STATES ENVIRONMENTAL PROTECTION AGENCY **2020 MODEL YEAR** **CERTIFICATE OF CONFORMITY** **WITH THE CLEAN AIR ACT**	**OFFICE OF TRANSPORTATION** **AND AIR QUALITY** **ANN ARBOR, MICHIGAN 48105**

Certificate Issued To: FPT Industrial S.p.A. (U.S. Manufacturer or Importer) **Certificate Number: LFPXL06.7DGS-005**	**Effective Date:** **07/11/2019** **Expiration Date:** **12/31/2020**	**Byron J. Bunker, Division Director** **Compliance Division**	**Issue Date:** **07/11/2019** **Revision Date:** **N/A**

Model Year: 2020 **Manufacturer Type:** Original Engine Manufacturer **Engine Family:** LFPXL06.7DGS	**Mobile/Stationary Indicator:** Stationary **Emissions Power Category:** 130<=kW<225 **Fuel Type:** Diesel **After Treatment Devices:** No After Treatment Devices Installed **Non-after Treatment Devices:** No Non-After Treatment Devices Installed

Pursuant to Section 111 and Section 213 of the Clean Air Act (42 U.S.C. sections 7411 and 7547) and 40 CFR Part 60, and subject to the terms and conditions prescribed in those provisions, this certificate of conformity is hereby issued with respect to the test engines which have been found to conform to applicable requirements and which represent the following engines, by engine family, more fully described in the documentation required by 40 CFR Part 60 and produced in the stated model year.

This certificate of conformity covers only those new compression-ignition engines which conform in all material respects to the design specifications that applied to those engines described in the documentation required by 40 CFR Part 60 and which are produced during the model year stated on this certificate of the said manufacturer, as defined in 40 CFR Part 60.

It is a term of this certificate that the manufacturer shall consent to all inspections described in 40 CFR 1068 and authorized in a warrant or court order. Failure to comply with the requirements of such a warrant or court order may lead to revocation or suspension of this certificate for reasons specified in 40 CFR Part 60. It is also a term of this certificate that this certificate may be revoked or suspended or rendered void *ab initio* for other reasons specified in 40 CFR Part 60.

This certificate does not cover engines sold, offered for sale, or introduced, or delivered for introduction, into commerce in the U.S. prior to the effective date of the certificate.

The actual engine power may lie outside the limits of the Emissions Power Category shown above. See the certificate application for details.

United States Environmental Protection Agency Warranty Statement
(Stationary Emergency Compression-Ignition Generators)

Warranty Rights, Obligations and Coverage

Your emission-related warranty covers only components whose failure would increase an engine's emissions of any regulated pollutant where they are designed, built, and equipped to be free from defects in materials and workmanship under applicable regulations of section 213 of the clean air act. To receive information about how to make an emission-related warranty claim, and how to make arrangements for authorized repairs call **1-800-333-1322** or **www.generac.com**. Emission- related warranty claims may be denied without proof of proper maintenance or use, accidents beyond the control of the manufacturer, or act of God. Proper maintenance is specified in the Owner's Manual. Usage is limited to stationary emergency operations and 100 hours per year for maintenance and readiness testing. The warranty period begins when the engine is placed into service. Warranty periods for compression ignition engines greater than 25 horsepower is five years. This warranty is applicable to compression-ignition generator models; equal to and larger than an SD80 starting 1/1/2011, equal to and larger than an SD35 starting 1/1/2012, and all compression-ignition generator models starting 1/1/2013.

Important Note

This warranty statement explains your rights and obligations under the Emission Control System Warranty, which is provided to you by Generac pursuant to federal law. Note that this warranty shall not apply to any incidental, consequential or indirect damages caused by defects in materials or workmanship or any delay in repair or replacement of the defective part(s). This warranty is in place of all other warranties, expressed or implied. Specifically, Generac makes no other warranties as to the merchantability or fitness for a particular purpose. Any implied warranties which are allowed by law, shall be limited in duration to the terms of the express warranty provided herein. Some states do not allow limitations on how long an implied warranty lasts, so the above limitation may not apply to you.

City of Brea

COUNCIL COMMUNICATION

TO: Honorable Mayor and City Council Members

FROM: Bill Gallardo, City Manager

DATE: 08/17/2021

SUBJECT: Acceptance of the Imperial Highway/Berry Street Intersection Improvements, CIP Project No. 7278.

RECOMMENDATION

1. Accept project as complete and authorize City Clerk to record Notice of Completion; and
2. Authorize City Clerk to release the Payment and Performance Bonds.

BACKGROUND/DISCUSSION

On December 15, 2020, the City Council awarded a Contract to Hardy & Harper, Inc. (“Hardy & Harper) in the amount of $565,000 for the Imperial Highway/Berry Street Intersection Improvements, CIP Project No. 7278 ("Project") and approved a $56,500 construction contingency for a total approved construction budget of $621,500. The Project widened the north side of Imperial Highway east of Berry Street to provide a dedicated westbound right turn lane. The improvements included modifying the traffic signal and reconstruction of sidewalks, curb and gutter, and curb access ramps. In addition, the project also included modifications to existing storm drain facilities at the intersection.

The Notice-to-Proceed with construction was issued on February 16, 2021 with a completion date of May 11, 2021 per the allotted number of working days in the contract. However, due to unforeseen conditions related to the utilities and Caltrans requests, the project was substantially completed on May 21, 2021. The amount of change orders approved for the project is $19,648.80, which equates to approximately 3% of the original contract amount. The change orders were primarily the result of the following changes:

- Storm Drain installation changed to night work
- Added a water gate valve for the fire hydrant for maintenance purposes
- Emergency work to abandon a 2” water service line upon discovery

The final total Contract cost is $584,648.80. The improvements have been completed and staff is recommending the City Council approve the Acceptance of Work performed by Hardy & Harper.

The following is a summary of contract costs:

Imperial Highway and Berry Street Intersection Improvement Construction Budget Summary

Original Construction Contract Amount	$565,000.00
Approved Change Orders	$19,648.80
Hardy & Harper Final Construction Contract Budget	**$584,648.80**
Approved Construction Contract Budget	**$621,500.00**
Remaining Construction Contract Balance	**$36,851.20**

COMMISSION/COMMITTEE RECOMMENDATION

The Finance Comittee reviewed staff's recommendation at their August 10, 2021 meeting and reccomended to proceed.

FISCAL IMPACT/SUMMARY

The final Contract amount is $584,648.80, which is under the approved construction budget. The source of funds is from the Traffic Impact Fund (Fund 540). There is no General Fund (Fund 110) impact.

This Project widened the north side of Imperial Highway east of Berry Street to accommodate a dedicated westbound right turn lane which enhances the westbound through traffic on Imperial Highway. Hardy & Harper has completed the Project and fulfilled its obligations to the City per the subject Contract. Therefore, staff is recommending the City Council accept the Project as complete and authorize the City Clerk to record a Notice of Completion. Additionally, staff is recommending authorizing the City Clerk to release the Payment and Performance Bonds.

RESPECTFULLY SUBMITTED:

William Gallardo, City Manager
Prepared by: Raymond Contreras, Associate Engineer
Concurrence: Michael Ho, P. E., Deputy Director of Public Works / City Engineer
Tony Olmos, P. E., Public Works Director

Attachments

Location Map
NOC

PROJECT 7278

IMPERIAL HIGHWAY AND BERRY INTERSECTION IMPROVEMENT

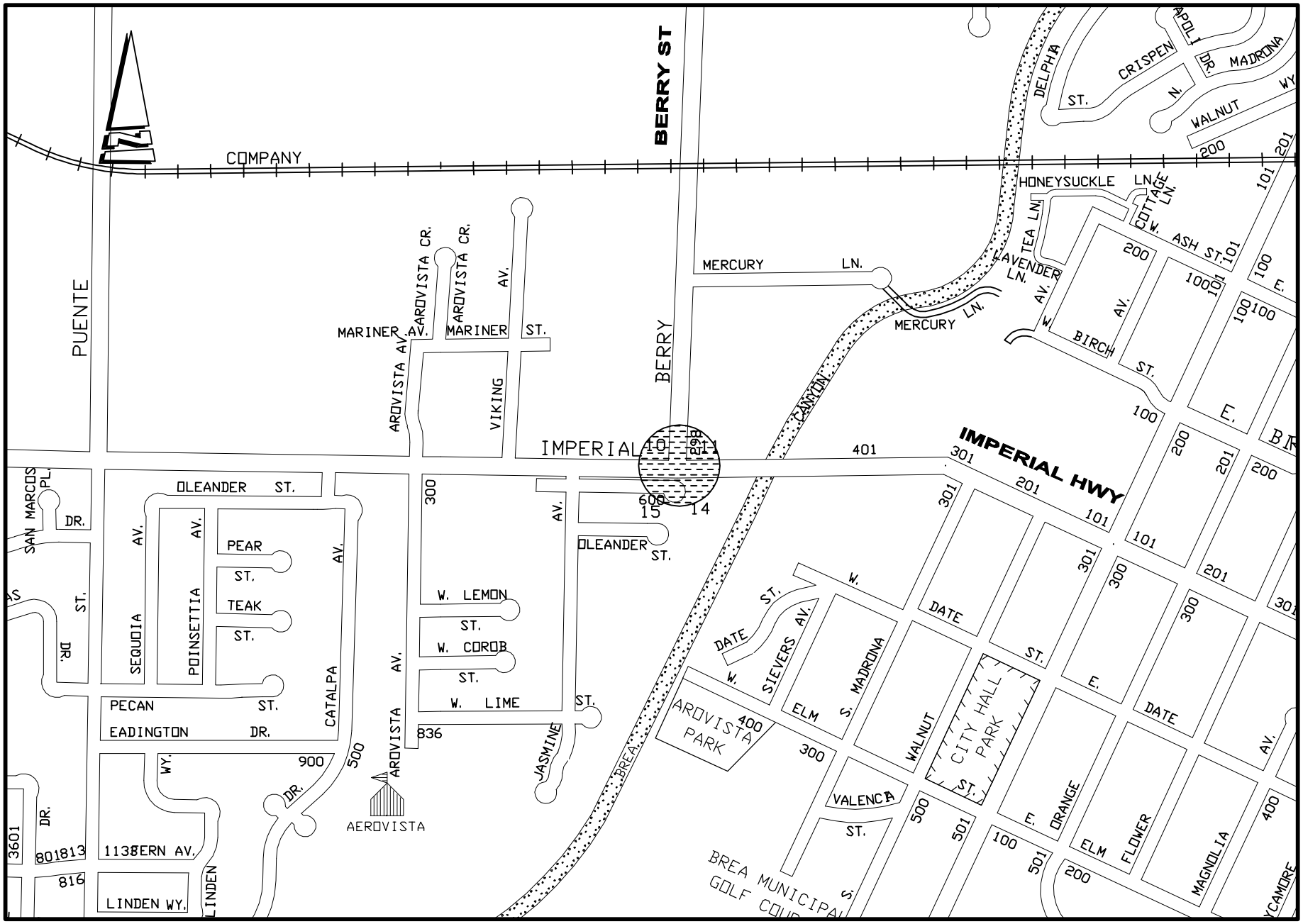

VICINITY MAP

NOT TO SCALE

RECORDING REQUESTED BY	
AND WHEN RECORDED MAIL TO	
Name **City of Brea**	
Street Address **1 Civic Center Circle**	
City & State Zip **Brea, CA 92821**	

Free recording requested per Government Code Section 27383. **SPACE ABOVE THIS LINE FOR RECORDER'S USE**

Lillian Harris-Neal, City Clerk, City of Brea

Notice of Completion

NOTICE IS HEREBY GIVEN THAT:

1. The undersigned is the owner of the interest or estate stated below in the property hereinafter described.
2. The full name of the undersigned is **City of Brea** (NAME)
3. The full address of the undersigned is **1 Civic Center Circle**
   Brea, CA 92821
   (NUMBER AND STREET, CITY, STATE, ZIP)
4. The nature of the title or the undersigned is **Owner-In-Fee**
5. The full names and full addresses of all persons, if any, who hold title with the undersigned as joint tenants or as tenants in common are:

Names	Addresses

6. The names of the predecessors in interest of the undersigned, if the property was transferred subsequent to the commence of the work of improvement herein referred to are (OR IF NO TRANSFER WAS MADE, INSERT THE WORD "none"):

Names	Addresses

7. A work of improvement on the property hereinafter described was completed on **05/17/2021**.
8. The name of the original contractor, if any, for the work of improvement was **Hardy & Harper, Inc.** (NAME OF CONTRACTOR, OR IF NO CONTRACTOR FOR THE WORK OF IMPROVEMENT AS A WHOLE, INSERT THE WORD "none"). [IF NOTICE COVERS COMPLETION OF CONTRACT FOR ONLY PART OF THE WORK OF IMPROVEMENT, ADD: The kind of work done or material furnished was_____.
9. The property on which the work of improvement was completed is in the City of **Brea**, County of **Orange**, State of California, and is described as follows: **Imperial Highway/Berry Street Intersection Improvements CIP Project No. 7278**
10. The street address of the said property is **none**

Dated: _____,2021.

(SIGNATURE)
Michael S. Ho P.E., Deputy Director/City Engineer (TYPED NAME)

VERIFICATION

I, the undersigned, say:
I am the person who signed the foregoing notice. I have read the above notice and know its contents, and the facts stated therein are true of my own knowledge.

I declare under penalty of perjury that the foregoing is true and correct.

Executed at **Brea**, California, this _____day of_____, 2021.

(SIGNATURE)
Michael S. Ho P.E., Deputy Director/City Engineer

City of Brea

COUNCIL COMMUNICATION

TO: Honorable Mayor and City Council Members

FROM: Bill Gallardo, City Manager

DATE: 08/17/2021

SUBJECT: Acceptance of the Country Lane Street Rehabilitation, CIP Project No. 7323

RECOMMENDATION

1. Accept project as complete and authorize City Clerk to record Notice of Completion; and
2. Authorize City Clerk to release the Payment and Performance Bonds.

BACKGROUND/DISCUSSION

On December 15, 2020, the City Council awarded a Contract to Gentry Brothers, Inc. (“Gentry Brothers”) in the amount of $279,738.24 for the Country Lane Street Rehabilitation, CIP Project No. 7323 ("Project") and approved a $27,973.82 construction contingency for a total approved construction budget of $307,712.06.

The Project was located within a residential neighborhood north of Lambert Road, southwest of State College Boulevard, east of Brea Boulevard and west of Cliffwood Avenue. The work consisted of pavement rehabilitation including cold milling, placement of new asphalt concrete, sidewalk improvements, curb and gutter improvements, curb ramp improvements, and adjustment of manholes and valves in the Country Lane neighborhood.

The Notice-to-Proceed with construction was dated January 19, 2021, and the completion date per the allotted number of working days in the contract, was April 14, 2021. Fortunately, despite a few change orders, the project was substantially completed ahead of schedule on March 19, 2021.

The total cumulative amount for the change orders approved on the project was $13,739,45, which equates to approximately 5% of the original contract amount. The change orders primarily consisted of the following items:

- Constructed additional driveway to the park parking lot; and
- Emergency water repairs

The final total Contract cost with change orders is $293,477.69. The improvements have been completed and staff is recommending the City Council approve the Acceptance of Work performed by Gentry Brothers.

The following is a summary of contract costs:

Country Lane Street Rehabilitation Construction Budget Summary

Original Construction Contract Amount	$279,738.24
Approved Change Orders	$13,739.45
Gentry Brothers Final Construction Contract Amount	**$293,477.69**
Approved Construction Contract Budget	**$307,712.06**
Remaining Construction Contract Balance	**$14,234.37**

COMMISSION/COMMITTEE RECOMMENDATION

The Finance Comittee reviewed staff's recommendation at their August 10, 2021 meeting and reccomended to proceed.

FISCAL IMPACT/SUMMARY

The final Contract amount of $293,477.69 is under the approved construction budget. The source of funds is from Measure M Fund (Fund 260) and Gas Tax Fund (220). There is no General Fund (Fund 110) impact.

This Project rehabilitated the streets in the Country Lane residential neighborhood including placement of new asphalt concrete, sidewalk improvements, curb and gutter improvements, curb ramp improvements, and the adjustment of manholes and valves. Gentry Brothers has completed the Project and fulfilled its obligations to the City per the subject Contract. Therefore, staff is recommending the City Council accept the Project as complete and authorize the City Clerk to record a Notice of Completion. Additionally, staff is recommending authorizing the City Clerk to release the Payment and Performance Bonds.

RESPECTFULLY SUBMITTED:

William Gallardo, City Manager
Prepared by: Raymond Contreras, Associate Engineer
Concurrence: Michael Ho., P. E., Deputy Director of Public Works / City Engineer
Tony Olmos, P. E., Public Works Director

Attachments

Location Map
NOC

PROJECT 7323

COUNTRY LANE STREET REHABILITATION

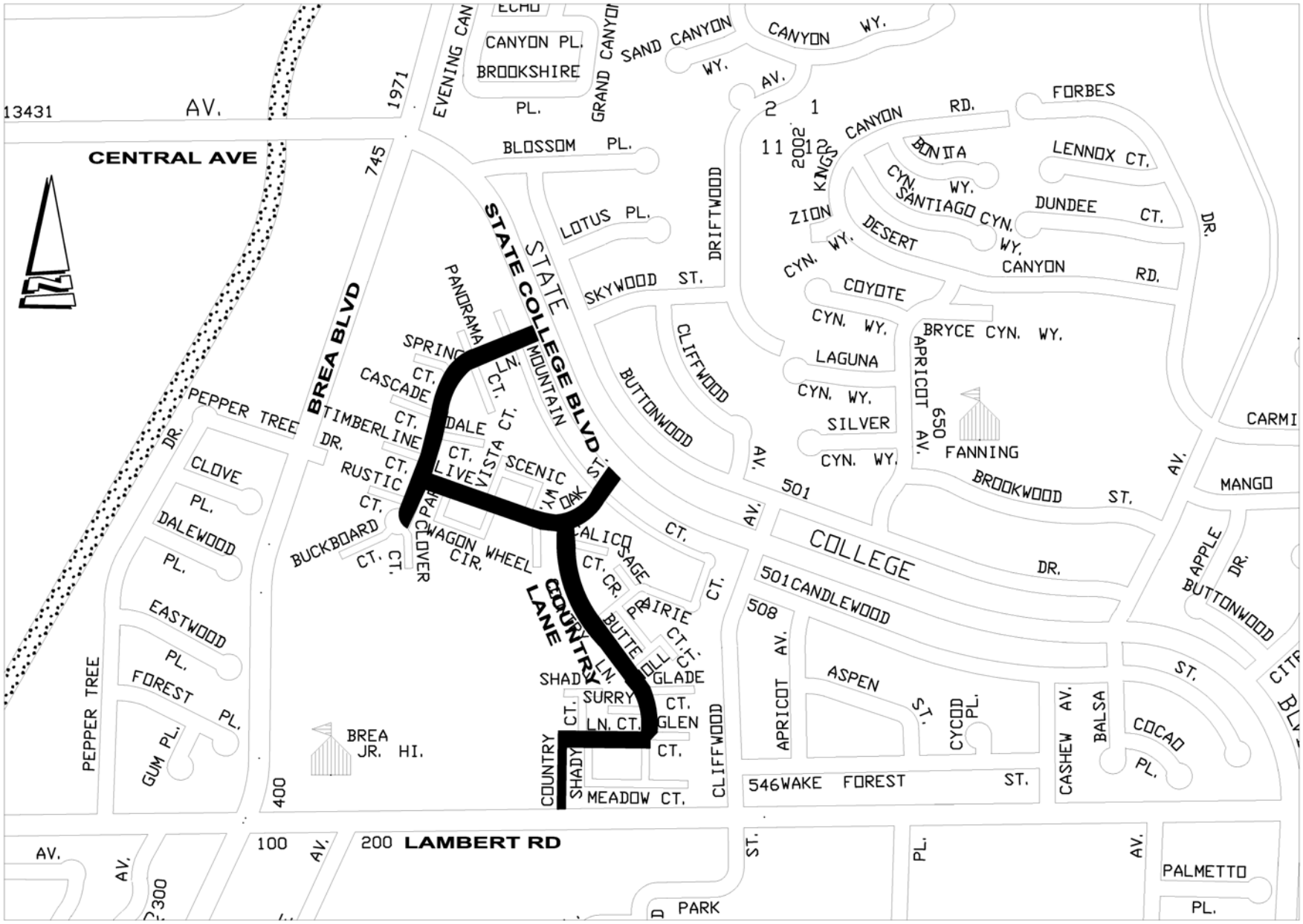

VICINITY MAP

NOT TO SCALE

RECORDING REQUESTED BY	
AND WHEN RECORDED MAIL TO	
Name **City of Brea**	
Street Address **1 Civic Center Circle**	
City & State Zip **Brea, CA 92821**	

Free recording requested per Government Code Section 27383. **SPACE ABOVE THIS LINE FOR RECORDER'S USE**

Lillian Harris-Neal, City Clerk, City of Brea

Notice of Completion

NOTICE IS HEREBY GIVEN THAT:

1. The undersigned is the owner of the interest or estate stated below in the property hereinafter described.
2. The full name of the undersigned is **City of Brea** (NAME)
3. The full address of the undersigned is **1 Civic Center Circle**
   Brea, CA 92821
   (NUMBER AND STREET, CITY, STATE, ZIP)
4. The nature of the title or the undersigned is **Owner-In-Fee**
5. The full names and full addresses of all persons, if any, who hold title with the undersigned as joint tenants or as tenants in common are:

Names	Addresses

6. The names of the predecessors in interest of the undersigned, if the property was transferred subsequent to the commence of the work of improvement herein referred to are (OR IF NO TRANSFER WAS MADE, INSERT THE WORD "none"):

Names	Addresses

7. A work of improvement on the property hereinafter described was completed on **03/19/2021**.
8. The name of the original contractor, if any, for the work of improvement was **Gentry Brothers, Inc.** (NAME OF CONTRACTOR, OR IF NO CONTRACTOR FOR THE WORK OF IMPROVEMENT AS A WHOLE, INSERT THE WORD "none"). [IF NOTICE COVERS COMPLETION OF CONTRACT FOR ONLY PART OF THE WORK OF IMPROVEMENT, ADD: The kind of work done or material furnished was_____.
9. The property on which the work of improvement was completed is in the City of **Brea**, County of **Orange**, State of California, and is described as follows: **Country Lane Street Rehabilitation CIP Project No. 7323**
10. The street address of the said property is **none**

Dated: _____,2021.

(SIGNATURE)
Michael S. Ho P.E., Deputy Director/City Engineer (TYPED NAME)

VERIFICATION

I, the undersigned, say:
I am the person who signed the foregoing notice. I have read the above notice and know its contents, and the facts stated therein are true of my own knowledge.

I declare under penalty of perjury that the foregoing is true and correct.

Executed at **Brea**, California, this _____day of_____, 2021.

(SIGNATURE)
Michael S. Ho P.E., Deputy Director/City Engineer

City of Brea

COUNCIL COMMUNICATION

TO: Honorable Mayor and City Council Members

FROM: Bill Gallardo, City Manager

DATE: 08/17/2021

SUBJECT: Resolution in Support of a Veterans Cemetery in Anaheim

RECOMMENDATION

Adopt Resolution No. 2021-052 in support of the establishment of a veterans cemetery in the City of Anaheim

BACKGROUND/DISCUSSION

Orange County is home to over 130,000 veterans, many of which are Brea residents who deserve a final resting place here in Orange County. However, the closest veterans cemeteries are in Riverside, Los Angeles, and San Diego.

After more than a decade of debate over a location, there is now a large, bipartisan consensus building around the Anaheim location in Gypsum Canyon. Recently, the Anaheim City Council voted unanimously to support the Anaheim site, and the Orange County Board of Supervisors unanimously allocated $20 million to develop a veterans cemetery in Anaheim.

It is recommended that the Brea City Council adopt this resolution in support of a veterans cemetery at the Anaheim site. This action will support bringing to fruition a final resting place for the brave men and women who have served our country.

RESPECTFULLY SUBMITTED:

William Gallardo, City Manager
Prepared by: Melissa Davis, Management Analyst

Attachments

Resolution

RESOLUTION NO. XXX

A RESOLUTION OF THE BREA CITY COUNCIL IN SUPPORT OF THE ESTABLISHMENT OF A VETERANS CEMETERY IN THE CITY OF ANAHEIM

A. <u>RECITALS</u>:

(i) The Brea City Council endorses building a veterans cemetery in Orange County.

(ii) California is home to more veterans than any other state; the majority of California's veterans reside in Southern California.

(iii) The nearest veterans cemeteries to Orange County are in Riverside, Los Angeles, and San Diego.

(iv) Property at Gypsum Canyon, located near the intersection of the 91 freeway and 241 toll road in Anaheim Hills, has been deeded to the Orange County Cemetery District by the County of Orange for the purpose of building a veterans cemetery.

(v) The Orange County Board of Supervisors is moving forward with planning and developing a site that would ultimately fulfill the promise made to Orange County veterans.

(vi) On July 1, 2021, numerous leaders representing veteran organizations gathered at the proposed Orange County Veterans Cemetery site in Anaheim Hills, and expressed their enthusiastic support for this location.

(vii) To honor and respect the men and women who served our country and who deserve the right to be buried in Orange County, we ask federal, state, and local governments to closely consider this proposed project as a benefit, not only to Orange County, but to the region as well.

B. <u>RESOLUTION</u>:

NOW, THEREFORE, it is found, determined, and resolved by the Brea City Council as follows:

1. Support the establishment of a veterans cemetery in Anaheim at the Gypsum Canyon site.

2. Encourage federal, state, and local governments to support this project.

APPROVED AND ADOPTED this __ day of ___, 2021.

_____
Steven Vargas, Mayor

ATTEST: _____
Lillian Harris-Neal, City Clerk

I, Lillian Harris-Neal, City Clerk of the City of Brea, do hereby certify that the foregoing Resolution was adopted at a meeting of the City Council of the City of Brea held on the ____ day of ____, 2021, by the following vote:

AYES: COUNCIL MEMBERS:

NOES: COUNCIL MEMBERS:

ABSENT: COUNCIL MEMBERS:

ABSTAIN: COUNCIL MEMBERS:

DATED: _____

_____
City Clerk

City of Brea

COUNCIL COMMUNICATION

TO: Honorable Mayor and City Council Members

FROM: Bill Gallardo, City Manager

DATE: 08/17/2021

SUBJECT: Ratify Termination and Award Multiple Contracts for Landscape Maintenance Services at Various Locations in the City of Brea

RECOMMENDATION

1. Ratify Termination of S. C. Yamamoto and,
2. Award Landscape Maintenance Agreements to:
   A.) Nieves Landscape Inc. for Mowing at City Parks in the amount of $103,950;
   B.) Nieves Landscape Inc. for Landscape Maintenance at City Medians, Parkways and Greenbelts in the amount of $138,392.64;
   C.) Nieves Landscape Inc. for Landscape Maintenance in Maintenance District 1 in the amount of $16,350;
   D.) Nieves Landscape Inc. for Landscape Maintenance in MD 3 in the amount of $27,000;
   E.) Nieves Landscape Inc. for Landscape Maintenance in MD 6 in the amount of $64,999.92;
   F.) Nieves Landscape Inc. for Landscape Maintenance in MD 7 in the amount of $13,410; and
3. Authorize City Manager to approve contract extensions.

BACKGROUND/DISCUSSION

In July of 2020, staff posted a joint City RFP on CIPLIST.com for landscape maintenance services that included mowing, irrigation work, ball field maintenance, playground maintenance and other landscape maintenance activities. Of the 33 companies that downloaded the RFP, eight proposals were received, seven of which were qualified proposers. Staff from Brea and La Habra interviewed all seven companies to determine their ability to perform the work required at competitive rates. After evaluating criteria such as appearance of equipment, company's uniform policy, references, quality of work in the field, proposal quality and interview results, staff ranked the companies as follows:

1. S. C. Yamamoto, Inc.
2. Nieves Landscape, Inc.
3. Mariposa Landscapes, Inc.
4. Complete Landscape Care, Inc.
5. Tropical Plaza Nursery, Inc.
6. Priority Landscape Services, LLC.
7. Merchants Landscape Services, Inc.

Contracts were awarded in December of 2020 to Mariposa Landscapes, Inc., S. C. Yamamoto,

Inc. and Tropical Plaza Nursery, Inc. (Contractors). Some of the other contractors withdrew their offers for pricing or not meeting insurance requirements. The effective date of the contracts was January of 2021, for an initial period of four and one half years until June 30, 2025, with three possible one-year extensions at the sole discretion of the City. Awards were made to Contractors in an effort to balance cost efficiencies while maintaining quality.

S.C. Yamamoto was awarded six contracts and has struggled to maintain quality levels in all areas. Staff met with them in December 2020 to review the specific Contract areas and related boundaries to avoid a long learning curve. Staff has also met with them on several other occasions in addition to the daily interactions with our Landscape Contract Administrator. Staff suggested schedules for City and Maintenance District areas to help improve their productivity and quality. On June 22, 2021, staff issued a Notice-to-Cure letter giving the Contractor 30 days to resolve their quality and productivity issues until July 21, 2021. After an unsatisfactory response to the Notice-to-Cure, a 30-day Notice to Terminate was issued on July 21, 2021, which will be effective August 20, 2021.

Staff is recommending the six contracts be awarded to Nieves Landscape, Inc. who rated second highest in all areas evaluated. The following chart shows current prices and recently negotiated prices with Nieves.

Agreement/Contractor	New Contract Price	Current Contract price	Difference
Parks Mowing - Nieves Landscape	$103,950	$68,040	$36,708
Landscape Maintenance at Medians/Entry Markers and Greenbelts - Nieves Landscape	$138,392.86	$139,560	($1,167.14)
Landscape Maintenance in Maintenance District 1 - Nieves Landscape	$16,350	$12,480	$3,870
Landscape Maintenance in Maintenance District 3 - Nieves Landscape	$27,000	$21,120	$5,880
Landscape Maintenance in Maintenance District 6 - Nieves Landscape	$65,000	$60,000	$5,000
Landscape Maintenance in Maintenance District 7 - Nieves Landscape	$13,410	$10,080	$3,330

As shown above, the cost increase to the mowing contract is $35,910 from the current cost and $28,111 more than the pre-RFP contract price of $75,833. Increases to the Districts compared to the pre-RFP contract prices are shown below:

District	New Contract Price	Pre-RFP Contract Price	Difference
M.D. #1	$16,350	$14,712	$1,638
M.D. #3	$27,000	$24,961	$2,039
M.D. #6	$65,000	$66,009	($1,009)
M.D. #7	$13,410	$13,206	$204

If approved, the new contracts with Nieves would go into effect immediately with the initial term to expire on June 30, 2025. Just as with the original landscape contracts, staff recommends the contracts include three possible one-year extensions at the sole discretion of the City. Any potential future CPI increases would be reviewed and approved by the Finance Committee.

COMMISSION/COMMITTEE RECOMMENDATION

This item was reviewed by the Finance Committee at their meeting on August 10, 2021 and recommended for City Council approval.

FISCAL IMPACT/SUMMARY

Staff issued a joint RFP with the City of La Habra in July of 2020. The two cities interviewed the seven proposers and based on the interviews, proposals and references, staff made award recommendations. S.C. Yamamoto has been unable to meet it's contract conditions and was issued a Notice of Termination effective August 20, 2021. Staff is recommending the six contracts be awarded to Nieves Landscape, Inc. The additional funding needed (shown below) will be addressed through the first quarter 2021-2022 budget adjustments:

110-51-5151-4269	$36,708
110-51-5142-4269	$0
341-51-5112-4266	$1,638
343-51-5112-4266	$2,039
346-51-5112-4266	$0
347-51-5112-4266	$204

RESPECTFULLY SUBMITTED:

William Gallardo, City Manager
Prepared by: Bill Bowlus, Public Works Superintendent
Concurrence: Tony Olmos, P.E., Director of Public Works

Attachments

Agreement for Parks Mowing
Agreement - City Medians
Agreement - MD1
Agreement - MD3
Agreement - MD6
Agreement MD7
Notice to Cure
Notice of Termination
Fee Schedule Parks Mowing
Fee Schedule City Medians Greenbelts Entry Markers
Fee Schedule MD1

Fee Schedule MD3
Fee Schedule MD6
Fee Schedule MD 7
Approved COI Nieves

LANDSCAPE MAINTENANCE AGREEMENT

THIS LANDSCAPE MAINTENANCE AGREEMENT ("Agreement") is dated [August 17, 2021 for reference purposes and is executed by the City of Brea ("City"), a California municipal corporation, and [Nieves Landscape Inc.] ("Contractor"), a [California] [C Corporation]. Contractor's CSLB license number is [674709]. Contractor's DIR registration number is [1000012716].

RECITALS

A. The City desires to retain Contractor as an independent contractor to provide landscape maintenance services at the following City facility or Landscape and Lighting Maintenance District: [Parks Mowing].

B. Contractor represents that it is fully qualified to perform such work by virtue of the training and experience of its personnel.

NOW, THEREFORE, the parties agree as follows:

1. Definitions. In addition to the terms defined above, the following definitions shall apply for purposes of this Agreement:

A. "Contract Administrator": Public Works Superintendent Bill Bowlus or a duly authorized designee.

B. "Contract Amount": [$ One Hundred Three Thousand, Nine Hundred and Fifty Dollars ($ 103,950.00)] per year.

C. "Fee Schedule": the fee schedule set forth in the attached Exhibit B.

D. "Indemnitees": the City and its officers, employees, agents, and volunteers.

E. "Insurance Requirements": the insurance requirements set forth in the attached Exhibit C.

F. "Labor Code Requirements": the Labor Code requirements set forth in the attached Exhibit D.

G. "Liabilities": actual, alleged, or threatened causes of action, claims, costs, damages, demands, expenses (including fees of accountants, attorneys, and other professionals), judgments, liens, losses, penalties, and proceedings of any nature whatsoever.

H. "Services": the tasks set forth in the attached Exhibit A.

2. Services.

A. General Requirements. Contractor shall perform the Services in a timely, regular basis in accordance with applicable laws. Time is of the essence in the performance of this Agreement.

B. Labor Code Requirements. Contractor acknowledges that the Services are a "public work" within the scope of the Prevailing Wage Law (Labor Code Section 1720 et seq.). Contractor shall comply with the Labor Code Requirements.

C. Performance Standard. Contractor shall perform all work to the highest professional standards and in a manner reasonably satisfactory to the City. Contractor shall consult the Contract Administrator for any decisions that must be made by the City.

D. Customer Care. While fulfilling the terms of this Agreement, Contractor is performing as a representative of City and shall provide exceptional customer care. Any negative contact with City staff, residents, businesses, visitors, or other contractors shall be reported by Contractor immediately to the Contract Administrator.

E. Cooperation. In the event any claim is brought against the City relating to Contractor's performance of the Services, Contractor shall provide any reasonable assistance and cooperation that the City might require.

3. Term.

A. Base Term. The base term of this Agreement shall be just under four years, commencing on August 20, 2021 and expiring on June 30, 2025, unless extended or earlier terminated as provided herein.

B. Extension Options. The City shall have three options by which it may extend the term of this Agreement by one year at a time in its sole discretion. The one-year extension options may be exercised sequentially or concurrently. To exercise an extension option, the City shall give written notice to Contractor at least 30 days prior to the then-scheduled expiration date.

C. City Manager Authority. The City Manager may exercise extension options without prior City Council approval if both of the following conditions are satisfied: (i) the compensation to be paid Contractor for the applicable extension period has been approved and is included in a City Council-approved budget; and (ii) Contractor is not in breach of this Agreement.

D. Termination. If either party breaches this Agreement and fails to cure such breach within seven days of written notice, then the non-breaching party may immediately terminate this Agreement for cause. Additionally, the City may terminate this Agreement for convenience upon 60 days prior written notice to Contractor.

4. Compensation.

A. Full Satisfaction. The City shall compensate Contractor for performance of the Services, and Contractor agrees to accept as full satisfaction for such work, payment according to the Fee Schedule. In no event shall the compensation payable to Contractor under this Agreement exceed the Contract Amount.

B. Invoices. Contractor shall submit monthly invoices to the City for the Services. Each invoice shall itemize the work performed during the billing period and the amount due. Within 30 days of receipt of each invoice, the City shall pay all undisputed amounts on the invoice. City shall not withhold applicable taxes or other authorized deductions from the payments, and Contractor shall pay all required taxes on the payments.

C. CPI Adjustment: Subject to paragraph D below, starting July 1, 2022, and on an annual basis thereafter, the Fee Schedule shall be adjusted using the Consumer Price index for all Urban Consumers for the Los Angeles, Riverside, Anaheim Metropolitan Area (CPI-U) for the most recent twelve (12) months ending on December 31st prior to the July 1 rate adjustment based on data available from the United States Bureau of Labor Statistics.

D. Council Approval Requirement. The Fee Schedule shall not be revised during the term of this Agreement (including any extension periods) without prior approval by the City Council.

5. Independent Contractor Status. Contractor is, and shall at all times remain as to the City, an independent contractor. Contractor shall have no power to incur any debt, obligation, or liability on behalf of the City or to act otherwise on behalf of the City as an agent. Neither the City nor any of its officers, employees, agents, or volunteers shall have control over the conduct of Contractor except as set forth in this Agreement.

6. PERS Compliance. Contractor acknowledges that the City is a local agency member of California's Public Employees' Retirement System ("PERS"), and as such has certain pension reporting and contribution obligations to PERS on behalf of qualifying employees. Contractor agrees that, in providing its employees and any other personnel to the City to perform the Services, Contractor shall assure compliance with the Public Employees' Retirement Law (Government Code § 20000 et seq.) and the Public Employees' Pension Reform Act of 2013 (Government Code 7522 et seq.). Without limitation to the foregoing, Contractor shall assure compliance with regard to personnel who have active or inactive membership in PERS and to those who are retired annuitants and in performing this Agreement shall not assign or utilize any of its personnel in a manner that will cause the City to be in violation of the applicable retirement laws and regulations.

7. Indemnification.

A. Requirement. Contractor shall defend, hold harmless, and indemnify the Indemnitees from and against any Liabilities that arise out of the acts or omissions of Contractor or its subcontractors in connection with this Agreement.

B. Scope. Contractor's obligations under this section shall apply, without limitation, to Liabilities that partially involve active or passive negligence by the City. However, Contractor's obligations under this section shall not apply to Liabilities that arise from the sole negligence or willful misconduct of the City, as determined by final arbitration or court decision or by consensus of the parties.

C. Survival. Contractor's obligations under this section shall survive expiration or termination of this Agreement, and shall apply regardless of whether or not any insurance policies are determined to be applicable to the Liabilities.

8. Insurance. Without limiting Contractor's defense, hold harmless, and indemnification obligations under this Agreement, Contractor shall maintain policies of insurance as specified in the Insurance Requirements.

9. Accounting Records. During the term of this Agreement and for a period of three years after termination or expiration, Contractor shall maintain all accounting and financial records related to this Agreement in accordance with generally accepted accounting practices, and shall keep and make records available for inspection and audit by City representatives upon reasonable written notice.

10. Suspension. The Contract Administrator may suspend all or any part of the Services for the City's convenience or for work stoppages beyond the control of the parties. Written notice of a suspension shall be given to Contractor.

11. Notices. Any notices, invoices, or other documents related to this Agreement shall be deemed received on: (a) the day of delivery, if delivered by hand during the receiving party's regular business hours or by e-mail before or during the receiving party's regular business hours; (b) the business day after delivery, if delivered by e-mail after the receiving party's regular business hours; or (c) on the second business day following deposit in the United States mail, postage prepaid, to the addresses listed below, or to such other addresses as the parties may, from time to time, designate in writing.

City	Contractor
City of Brea	Nieves Landscape Inc.
545 N. Berry St.	1629 E. Edinger Ave.
Brea, CA 92821	Santa Ana, California 92705
Attn: Bill Bowlus	Attn: Greg Nieves, President
E-mail: BillB@ci.brea.ca.us	E-mail: gnieves@nieveslandscape.com

12. Assignability. Contractor shall not assign, transfer or subcontract any interest in this Agreement or the performance of any of its obligations without the City Manager's

prior written consent. This prohibition is not intended to preclude, and shall not be interpreted as precluding, Contractor from utilizing subcontractors identified in Contractor's proposal for the Services. Any attempt by Contractor to assign, transfer or subcontract any rights, duties or obligations in violation of this prohibition shall be void.

13. Litigation. In the event that either party shall commence legal action to enforce or interpret this Agreement, the prevailing party shall be entitled to recover its costs of suit including reasonable attorneys' fees. The venue for litigation shall be Orange County, California. The interpretation of this Agreement shall not be resolved by any rules of construction providing for interpretation against the party who causes the uncertainty to exist or against the party who drafted the disputed language.

14. Exhibits. The attached Exhibits A through D are incorporated into this Agreement by reference. In the event of any material discrepancy between the express provisions of this Agreement and the provisions of an Exhibit, the provisions of this Agreement shall prevail.

15. Incorporation of Mandatory Language. Each and every provision required by law to be inserted in this Agreement shall be deemed to be inserted and this Agreement shall be read and enforced as though such provision were included. If through mistake or otherwise any such provision is not inserted, or is not correctly inserted, then upon request of either party this Agreement shall promptly be amended to make such insertion or correction.

16. Entire Agreement. This Agreement (and the attached Exhibits) represents the entire and integrated contract between the parties regarding the Services. This Agreement supersedes all prior oral or written negotiations, representations and contracts related to the Services. This Agreement may not be amended, nor any provision or breach waived, except in a writing that is signed by the parties and that expressly refers to this Agreement.

[SIGNATURES ON FOLLOWING PAGE]

TO EXECUTE THIS AGREEMENT, the parties have caused their duly authorized representatives to sign below. Digital Signatures are acceptable if they conform to all requirements of Government Code Section 16.5.

[contractor name]

[use this signature block if contractor is a corporation]

☐ Chairperson ☒ President	☒ Secretary ☐ Asst. Secretary
☐ Vice President	☐ Chief Finance Officer ☐ Asst. Treasurer

[Pursuant to California Corporations Code Section 313, both signature lines must be executed unless the signatory holds at least one of the offices designated on each line.]

[use this signature block if contractor is a limited liability company]

Manager	Manager

[Pursuant to California Corporations Code Section 17703.01(d), both signature lines must be executed unless the articles of incorporation state that the firm is managed by only one manager.]

City of Brea

Steven Vargas, Mayor

Attest:

Lillian Harris-Neal, City Clerk

EXHIBIT A
Scope of Services

(attached)

EXHIBIT B
Fee Schedule

(attached)

EXHIBIT C
Insurance Requirements

1. Summary. Insurance coverages shall comply with requirements set forth herein.

   A. Rating Requirements. A /VII minimum.

   B. Commercial General Liability (CGL) + (PCO)
      a. $2,000,000 Minimum. Per occurrence.
      b. Additional Insured Endorsement. Required.
      c. Waiver of Subrogation. Required.

   C. Automobile Liability Insurance (ALI) (any auto)
      a. $2,000,000 Minimum. Per occurrence.
      b. Additional Insured Endorsement. Required.
      c. Waiver of Subrogation. Required.
      d. Exception. Not required if no vehicles used except for deliveries.

   D. Workers' Compensation (WC) and Employer's Liability (ELI)
      a. Statutory limits for Worker's Compensation.
      b. $1,000,000 Minimum. Per accident for bodily injury or disease.
      c. Additional Insured Endorsement. Not Required.
      d. Waiver of Subrogation. Required.
      e. Exception. Not required if no employees used for these Services.

2. General Requirements

   A. The City reserves the right to modify these requirements, including limits, based on the nature of the risk, prior experience, insurer, coverage, or other special circumstances. If the existing policies do not meet these requirements, Contractor agrees to amend, supplement or endorse the policies to do so.

   B. Without limiting Contractor's indemnity obligations hereunder, Contractor shall procure and maintain in full force and effect for the term of this Agreement, the following policies of insurance.

   C. For all insurance required by this Agreement, if a general aggregate limit applies, either the general aggregate limit shall apply separately to the Services or the general aggregate limit shall be twice the required occurrence limit.

D. If Contractor maintains broader coverage and/or higher limits than the minimums required herein, City requires and shall be entitled to the broader coverage and/or higher limits maintained by Contractor.

3. Coverages

A. Commercial General Liability (CGL)

a. CGL affords coverage at least as broad as Insurance Services Office "occurrence" form CG 00 01, including products and completed operations, property damage, bodily injury, and personal & advertising injury.

b. Limits shall be no less than $2,000,000 per occurrence.

c. Products-Completed Operations (PCO)
Contractor shall procure and submit to the City evidence of insurance for a period of at least ten (10) years from the time that all work under this Agreement is completed.

B. Automobile Liability Insurance (ALI)

a. ALI with coverage at least as broad as Insurance Services Office Form CA 0001 covering "Any Auto" (Symbol 1) for each accident for bodily injury and property damage with limit no less than $1,000,000 per occurrence.

b. If Contractor does not own any vehicles, Contractor may satisfy this requirement by providing the following:

i. A personal automobile liability policy for the contractor's own vehicle, if Contractor is a one-person operation; and

ii. A non-owned & hired auto liability endorsement to the commercial general liability policy if the contractor may lease, hire, rent, borrow, or use vehicles of others (e.g., employee-owned vehicles).

C. Workers' Compensation (WC)

a. Workers' Compensation as required by the State of California with statutory limits, and Employer's Liability Insurance with a limit of not less than $1,000,000 per accident for bodily injury or disease.

b. Self-Employment Affidavit or Declaration, signed under the penalty of perjury, if Contractor has no employees who will be performing work on behalf of the City, Contractor must provide:

i. A signed Self-Employment Affidavit Letter or a signed Declaration that Contractor is aware of the provisions of Section 3700 of the California Labor Code, which requires every employer to be insured against liability for workers' compensation or to undertake self-insurance in accordance with the provisions of that code, and that Contractor will

comply with such provisions before commencing the performance of the work of this contract; and

ii. A certification that Contractor does not employ any individual(s) in the course and scope of business operations.

4. Endorsements. Insurance policies shall not be in compliance if they include any limiting provision or endorsement that has not been submitted to the City for approval. The insurance policies shall contain or be endorsed to contain, the following provisions:

A. Commercial General Liability & Contractors Pollution Liability

a. Additional Insured. The City, its elected officials, officers, employees, volunteers, boards, and representatives shall be additional insureds with regard to liability and defense of suits or claims arising out of the work or operations performed by or on behalf of Contractor including materials, parts or equipment furnished in connection with such work or operations.

b. Additional Insured Endorsements shall not:

- Be limited to "Ongoing Operations".
- Exclude "Contractual Liability".
- Restrict coverage to the "Sole" liability of Contractor.
- Exclude "Third-Party-Over Actions".
- Contain any other exclusion contrary to this Agreement.

c. Additional Insured Endorsements shall be at least as broad as ISO Form(s) CG 20 10 11 85; or CG 2010 and CG 20 37.

d. Primary Insurance. This insurance shall be primary and any other insurance whether primary, excess, umbrella or contingent insurance, including deductible, or self-insurance available to the insureds added by endorsement shall be in excess of and shall not contribute with this insurance. Coverage shall be at least as broad as ISO CG 20 01 04 13.

B. Auto Liability

a. Additional Insured. The City, its elected officials, officers, employees, volunteers, boards, agents and representatives) shall be additional insureds with regard to liability and defense of suits or claims arising out of the work or operations performed by or on behalf of Contractor.

b. Primary Insurance. This insurance shall be primary and any other insurance whether primary, excess, umbrella or contingent insurance, including deductible, or self-insurance available to the insureds added by endorsement shall be in excess of and shall not contribute with this insurance.

C. Workers' Compensation. A waiver of subrogation stating that the insurer waives all rights of subrogation against the indemnified parties.

5. Miscellaneous.

A. Insurance Obligations of Contractor. The insurance obligations under this Agreement shall be: (1) all the Insurance coverage and/or limits carried by or available to Contractor; or (2) the minimum Insurance coverage requirements and/or limits shown in this Agreement; whichever is greater. Any insurance proceeds in excess of or broader than the minimum required coverage and/or minimum required limits, which are applicable to a given loss, shall be available to the City. No representation is made that the minimum insurance requirements of this agreement are sufficient to cover the obligations of the Contractor under this agreement.

B. Notice of Cancellation. Required insurance policies shall not be cancelled or the coverage reduced until a 30 day written notice of cancellation has been served upon City except 10 days shall be allowed for non-payment of premium.

C. Waiver of Subrogation. Required insurance coverages (except professional liability) shall not prohibit Contractor from waiving the right of subrogation prior to a loss. Contractor shall waive all rights of subrogation against the indemnified parties and policies shall contain or be endorsed to contain such a provision. This provision applies regardless of whether the City has received a waiver of subrogation endorsement from the insurer.

D. Evidence of Insurance. All policies, endorsements, certificates, and/or binders shall be subject to approval by the City as to form and content. These requirements are subject to amendment or waiver only if so approved in writing by the City. The City reserves the right to require complete, certified copies of all required insurance policies, including endorsements required by these specifications, at any time.

E. The certificates and endorsements for each insurance policy shall be signed by a person authorized by that insurer to bind coverage on its behalf. At least 15 days prior to the expiration of any such policy, evidence of insurance showing that such insurance coverage has been renewed or extended shall be filed with City. If such coverage is cancelled or reduced, Contractor shall, within 10 days after receipt of written notice of such cancellation or reduction of coverage, file with the City evidence of insurance showing that the required insurance has been reinstated or has been provided through another insurance company or companies.

F. Deductible or Self-Insured Retention. Any deductible or self-insured retention must be approved in writing by the City and shall protect the

indemnified parties in the same manner and to the same extent as they would have been protected had the policy or policies not contained a deductible or self-insured retention. The City may require Contractor to purchase coverage with a lower retention or provide proof of ability to pay losses and related investigations, claim administration and defense expenses within the retention.

G. Contractual Liability. The coverage provided shall apply to the obligations assumed by Contractor under the indemnity provisions of this Agreement.

H. Failure to Maintain Coverage. Contractor agrees to suspend and cease all operations hereunder during such period of time as the required insurance coverage is not in effect and evidence of insurance has not been furnished to the City. The City shall have the right to withhold any payment due until Contractor has fully complied with the insurance provisions of this Agreement.

I. In the event that Contractor's operations are suspended for failure to maintain required insurance coverage, Contractor shall not be entitled to an extension of time for completion of the Work because of production lost during suspension.

J. Acceptability of Insurers. Each such policy shall be from a company or companies with a current A.M. Best's rating of no less than A:VII and authorized to do business in the State of California, or otherwise allowed to place insurance through surplus line brokers under applicable provisions of the California Insurance Code or any federal law. Any other rating must be approved in writing by the City.

K. Claims Made Policies. If coverage, including coverage for Construction Defect claims, is written on a claims-made basis, the retroactive date on such insurance and all subsequent insurance shall coincide or precede the effective date of this Agreement and an extended reporting period shall be provided for a period of at least five years from termination or expiration of this Agreement.

L. Insurance for Subcontractors. Contractor shall be responsible for causing Subcontractors to purchase the same types and limits of insurance in compliance with the terms of this Agreement, including adding the City as an Additional Insured, providing Primary and Non-Contributory coverage and Waiver of Subrogation to the Subcontractor's policies. The Commercial General Liability Additional Insured Endorsement shall be on a form at least as broad as CG 20 38 04 13.

EXHIBIT D
Labor Code Requirements

1. Pursuant to Labor Code Section 1773.2, copies of the prevailing rate of per diem wages for each craft, classification, or type of worker needed to perform the Services are on file at City Hall and will be made available to any interested party on request. By initiating any Work, Contractor acknowledges receipt of a copy of the DIR determination of such prevailing rate of per diem wages, and Contractor shall post such rates at each job site covered by these Contract Documents.

2. Contractor shall comply with and be bound by the provisions of Labor Code Sections 1774 and 1775 concerning the payment of prevailing rates of wages to workers and the penalties for failure to pay prevailing wages. Contractor shall, as a penalty paid to the City, forfeit $200 for each calendar day, or portion thereof, for each worker paid less than the prevailing rates as determined by the DIR for the work or craft in which the worker is employed for any public work done pursuant to these Contract Documents by Contractor or by any subcontractor.

3. Contractor shall comply with and be bound by the provisions of Labor Code Section 1776, which requires Contractor and each subcontractor to (1) keep accurate payroll records and verify such records in writing under penalty of perjury, as specified in Section 1776, (2) certify and make such payroll records available for inspection as provided by Section 1776, and (3) inform the City of the location of the records. Contractor has 10 days in which to comply subsequent to receipt of a written notice requesting these records, or as a penalty to the City, Contractor shall forfeit $100 for each day, or portion thereof, for each worker, until strict compliance is effectuated. Upon the request of the Division of Labor Standards Enforcement, these penalties shall be withheld from progress payments then due.

4. Contractor and each subcontractor shall comply with and be bound by the provisions of Labor Code Section 1771.4(a)(3), which requires that each contractor and each subcontractor shall furnish the records specified in Section 1776 directly to the Labor Commissioner at least monthly, in a format prescribed by the Labor Commissioner.

5. Contractor acknowledges that eight hours labor constitutes a legal day's work. Contractor shall comply with and be bound by Labor Code Section 1810. Contractor shall comply with and be bound by the provisions of Labor Code Section 1813 concerning penalties for workers who work excess hours. Contractor shall, as a penalty paid to the City, forfeit $25 for each worker employed in the performance of the Services by Contractor or by any subcontractor for each calendar day during which such worker is required or permitted to work more than eight hours in any one calendar day and 40 hours in

any one calendar week in violation of the provisions of Division 2, Part 7, Chapter 1, Article 3 of the Labor Code. Pursuant to Labor Code Section 1815, work performed by employees of the Contractor in excess of eight hours per day, and 40 hours during any one week shall be permitted upon public work upon compensation for all hours worked in excess of eight hours per day at not less than 1.5 times the basic rate of pay.

6. Contractor shall comply with and be bound by the provisions of Labor Code Sections 1777.5, 1777.6 and 1777.7 and California Code of Regulations Title 8, Section 200 et seq. concerning the employment of apprentices on public works projects. Contractor shall be responsible for compliance with these Sections for all apprenticeable occupations. Before commencing the Services, Contractor shall provide the City with a copy of the information submitted to any applicable apprenticeship program. Within 60 days after concluding work, Contractor and each of its subcontractors shall submit to the City a verified statement of the journeyman and apprentice hours performed under this Agreement.

7. Contractor shall not perform work with any subcontractor that has been debarred or suspended pursuant to California Labor Code Section 1777.1 or any other federal or state law providing for the debarment of contractors from public works. Contractor and subcontractors shall not be debarred or suspended throughout the duration of this Agreement pursuant to Labor Code Section 1777.1 or any other federal or state law providing for the debarment of contractors from public works. If Contractor or any subcontractor becomes debarred or suspended during the duration of this Agreement, Contractor shall immediately notify the City.

8. In accordance with Labor Code Sections 1725.5 and 1771.1, no contractor or subcontractor shall be qualified to bid on, be listed in a bid, subject to the requirements of Section 4104 of the Public Contract Code, or engage in the performance of any contract for public work, unless currently registered and qualified to perform public work pursuant to Section 1725.5.

9. The Services are subject to compliance monitoring and enforcement by the DIR. Contractor shall post job site notices, as prescribed by regulation.

10. Labor Code Sections 1860 and 3700 provide that every contractor will be required to secure the payment of compensation to its employees. In accordance with the provisions of Labor Code Section 1861, by signing this Agreement, Contractor certifies as follows:

> "I am aware of the provisions of Section 3700 of the Labor Code which require every employer to be insured against liability for workers' compensation or to undertake self-insurance in accordance with the provisions of that code, and I will comply with such provisions before commencing the performance of the Work of this contract."

LANDSCAPE MAINTENANCE AGREEMENT

THIS LANDSCAPE MAINTENANCE AGREEMENT ("Agreement") is dated [August 17, 2021 for reference purposes and is executed by the City of Brea ("City"), a California municipal corporation, and [Nieves Landscape Inc.] ("Contractor"), a [California] [C Corporation]. Contractor's CSLB license number is [674709]. Contractor's DIR registration number is [1000012716].

RECITALS

A. The City desires to retain Contractor as an independent contractor to provide landscape maintenance services at the following City facility or Landscape and Lighting Maintenance District: [City Medians, Greenbelts and Entry Markers].

B. Contractor represents that it is fully qualified to perform such work by virtue of the training and experience of its personnel.

NOW, THEREFORE, the parties agree as follows:

1. Definitions. In addition to the terms defined above, the following definitions shall apply for purposes of this Agreement:

A. "Contract Administrator": Public Works Superintendent Bill Bowlus or a duly authorized designee.

B. "Contract Amount": [$ One Hundred Thirty-Eight Thousand, Three Hundred Ninety-Two Dollars and 64 cents ($ 138,392.64)] per year.

C. "Fee Schedule": the fee schedule set forth in the attached Exhibit B.

D. "Indemnitees": the City and its officers, employees, agents, and volunteers.

E. "Insurance Requirements": the insurance requirements set forth in the attached Exhibit C.

F. "Labor Code Requirements": the Labor Code requirements set forth in the attached Exhibit D.

G. "Liabilities": actual, alleged, or threatened causes of action, claims, costs, damages, demands, expenses (including fees of accountants, attorneys, and other professionals), judgments, liens, losses, penalties, and proceedings of any nature whatsoever.

H. "Services": the tasks set forth in the attached Exhibit A.

2. Services.

A. General Requirements. Contractor shall perform the Services in a timely, regular basis in accordance with applicable laws. Time is of the essence in the performance of this Agreement.

B. Labor Code Requirements. Contractor acknowledges that the Services are a "public work" within the scope of the Prevailing Wage Law (Labor Code Section 1720 et seq.). Contractor shall comply with the Labor Code Requirements.

C. Performance Standard. Contractor shall perform all work to the highest professional standards and in a manner reasonably satisfactory to the City. Contractor shall consult the Contract Administrator for any decisions that must be made by the City.

D. Customer Care. While fulfilling the terms of this Agreement, Contractor is performing as a representative of City and shall provide exceptional customer care. Any negative contact with City staff, residents, businesses, visitors, or other contractors shall be reported by Contractor immediately to the Contract Administrator.

E. Cooperation. In the event any claim is brought against the City relating to Contractor's performance of the Services, Contractor shall provide any reasonable assistance and cooperation that the City might require.

3. Term.

A. Base Term. The base term of this Agreement shall be just under four years, commencing on August 20, 2021 and expiring on June 30, 2025, unless extended or earlier terminated as provided herein.

B. Extension Options. The City shall have three options by which it may extend the term of this Agreement by one year at a time in its sole discretion. The one-year extension options may be exercised sequentially or concurrently. To exercise an extension option, the City shall give written notice to Contractor at least 30 days prior to the then-scheduled expiration date.

C. City Manager Authority. The City Manager may exercise extension options without prior City Council approval if both of the following conditions are satisfied: (i) the compensation to be paid Contractor for the applicable extension period has been approved and is included in a City Council-approved budget; and (ii) Contractor is not in breach of this Agreement.

D. Termination. If either party breaches this Agreement and fails to cure such breach within seven days of written notice, then the non-breaching party may immediately terminate this Agreement for cause. Additionally, the City may terminate this Agreement for convenience upon 60 days prior written notice to Contractor.

4. Compensation.

A. Full Satisfaction. The City shall compensate Contractor for performance of the Services, and Contractor agrees to accept as full satisfaction for such work, payment according to the Fee Schedule. In no event shall the compensation payable to Contractor under this Agreement exceed the Contract Amount.

B. Invoices. Contractor shall submit monthly invoices to the City for the Services. Each invoice shall itemize the work performed during the billing period and the amount due. Within 30 days of receipt of each invoice, the City shall pay all undisputed amounts on the invoice. City shall not withhold applicable taxes or other authorized deductions from the payments, and Contractor shall pay all required taxes on the payments.

C. CPI Adjustment: Subject to paragraph D below, starting July 1, 2022, and on an annual basis thereafter, the Fee Schedule shall be adjusted using the Consumer Price index for all Urban Consumers for the Los Angeles, Riverside, Anaheim Metropolitan Area (CPI-U) for the most recent twelve (12) months ending on December 31st prior to the July 1 rate adjustment based on data available from the United States Bureau of Labor Statistics.

D. Council Approval Requirement. The Fee Schedule shall not be revised during the term of this Agreement (including any extension periods) without prior approval by the City Council.

5. Independent Contractor Status. Contractor is, and shall at all times remain as to the City, an independent contractor. Contractor shall have no power to incur any debt, obligation, or liability on behalf of the City or to act otherwise on behalf of the City as an agent. Neither the City nor any of its officers, employees, agents, or volunteers shall have control over the conduct of Contractor except as set forth in this Agreement.

6. PERS Compliance. Contractor acknowledges that the City is a local agency member of California's Public Employees' Retirement System ("PERS"), and as such has certain pension reporting and contribution obligations to PERS on behalf of qualifying employees. Contractor agrees that, in providing its employees and any other personnel to the City to perform the Services, Contractor shall assure compliance with the Public Employees' Retirement Law (Government Code § 20000 et seq.) and the Public Employees' Pension Reform Act of 2013 (Government Code 7522 et seq.). Without limitation to the foregoing, Contractor shall assure compliance with regard to personnel who have active or inactive membership in PERS and to those who are retired annuitants and in performing this Agreement shall not assign or utilize any of its personnel in a manner that will cause the City to be in violation of the applicable retirement laws and regulations.

7. Indemnification.

A. Requirement. Contractor shall defend, hold harmless, and indemnify the Indemnitees from and against any Liabilities that arise out of the acts or omissions of Contractor or its subcontractors in connection with this Agreement.

B. Scope. Contractor's obligations under this section shall apply, without limitation, to Liabilities that partially involve active or passive negligence by the City. However, Contractor's obligations under this section shall not apply to Liabilities that arise from the sole negligence or willful misconduct of the City, as determined by final arbitration or court decision or by consensus of the parties.

C. Survival. Contractor's obligations under this section shall survive expiration or termination of this Agreement, and shall apply regardless of whether or not any insurance policies are determined to be applicable to the Liabilities.

8. Insurance. Without limiting Contractor's defense, hold harmless, and indemnification obligations under this Agreement, Contractor shall maintain policies of insurance as specified in the Insurance Requirements.

9. Accounting Records. During the term of this Agreement and for a period of three years after termination or expiration, Contractor shall maintain all accounting and financial records related to this Agreement in accordance with generally accepted accounting practices, and shall keep and make records available for inspection and audit by City representatives upon reasonable written notice.

10. Suspension. The Contract Administrator may suspend all or any part of the Services for the City's convenience or for work stoppages beyond the control of the parties. Written notice of a suspension shall be given to Contractor.

11. Notices. Any notices, invoices, or other documents related to this Agreement shall be deemed received on: (a) the day of delivery, if delivered by hand during the receiving party's regular business hours or by e-mail before or during the receiving party's regular business hours; (b) the business day after delivery, if delivered by e-mail after the receiving party's regular business hours; or (c) on the second business day following deposit in the United States mail, postage prepaid, to the addresses listed below, or to such other addresses as the parties may, from time to time, designate in writing.

City
City of Brea
545 N. Berry St.
Brea, CA 92821
Attn: Bill Bowlus
E-mail: BillB@ci.brea.ca.us

Contractor
Nieves Landscape Inc.
1629 E. Edinger Ave.
Santa Ana, California 92705
Attn: Greg Nieves, President
E-mail: gnieves@nieveslandscape.com

12. Assignability. Contractor shall not assign, transfer or subcontract any interest in this Agreement or the performance of any of its obligations without the City Manager's

prior written consent. This prohibition is not intended to preclude, and shall not be interpreted as precluding, Contractor from utilizing subcontractors identified in Contractor's proposal for the Services. Any attempt by Contractor to assign, transfer or subcontract any rights, duties or obligations in violation of this prohibition shall be void.

13. Litigation. In the event that either party shall commence legal action to enforce or interpret this Agreement, the prevailing party shall be entitled to recover its costs of suit including reasonable attorneys' fees. The venue for litigation shall be Orange County, California. The interpretation of this Agreement shall not be resolved by any rules of construction providing for interpretation against the party who causes the uncertainty to exist or against the party who drafted the disputed language.

14. Exhibits. The attached Exhibits A through D are incorporated into this Agreement by reference. In the event of any material discrepancy between the express provisions of this Agreement and the provisions of an Exhibit, the provisions of this Agreement shall prevail.

15. Incorporation of Mandatory Language. Each and every provision required by law to be inserted in this Agreement shall be deemed to be inserted and this Agreement shall be read and enforced as though such provision were included. If through mistake or otherwise any such provision is not inserted, or is not correctly inserted, then upon request of either party this Agreement shall promptly be amended to make such insertion or correction.

16. Entire Agreement. This Agreement (and the attached Exhibits) represents the entire and integrated contract between the parties regarding the Services. This Agreement supersedes all prior oral or written negotiations, representations and contracts related to the Services. This Agreement may not be amended, nor any provision or breach waived, except in a writing that is signed by the parties and that expressly refers to this Agreement.

[SIGNATURES ON FOLLOWING PAGE]

TO EXECUTE THIS AGREEMENT, the parties have caused their duly authorized representatives to sign below. Digital Signatures are acceptable if they conform to all requirements of Government Code Section 16.5.

[contractor name]

[use this signature block if contractor is a corporation]

☐ Chairperson ☒ President	☒ Secretary ☐ Asst. Secretary
☐ Vice President	☐ Chief Finance Officer ☐ Asst. Treasurer

[Pursuant to California Corporations Code Section 313, both signature lines must be executed unless the signatory holds at least one of the offices designated on each line.]

[use this signature block if contractor is a limited liability company]

Manager	Manager

[Pursuant to California Corporations Code Section 17703.01(d), both signature lines must be executed unless the articles of incorporation state that the firm is managed by only one manager.]

City of Brea

Steven Vargas, Mayor

Attest:

Lillian Harris-Neal, City Clerk

EXHIBIT A
Scope of Services

(attached)

EXHIBIT B
Fee Schedule

(attached)

EXHIBIT C
Insurance Requirements

1. Summary. Insurance coverages shall comply with requirements set forth herein.

   A. Rating Requirements. A /VII minimum.

   B. Commercial General Liability (CGL) + (PCO)
      a. $2,000,000 Minimum. Per occurrence.
      b. Additional Insured Endorsement. Required.
      c. Waiver of Subrogation. Required.

   C. Automobile Liability Insurance (ALI) (any auto)
      a. $2,000,000 Minimum. Per occurrence.
      b. Additional Insured Endorsement. Required.
      c. Waiver of Subrogation. Required.
      d. Exception. Not required if no vehicles used except for deliveries.

   D. Workers' Compensation (WC) and Employer's Liability (ELI)
      a. Statutory limits for Worker's Compensation.
      b. $1,000,000 Minimum. Per accident for bodily injury or disease.
      c. Additional Insured Endorsement. Not Required.
      d. Waiver of Subrogation. Required.
      e. Exception. Not required if no employees used for these Services.

2. General Requirements

   A. The City reserves the right to modify these requirements, including limits, based on the nature of the risk, prior experience, insurer, coverage, or other special circumstances. If the existing policies do not meet these requirements, Contractor agrees to amend, supplement or endorse the policies to do so.

   B. Without limiting Contractor's indemnity obligations hereunder, Contractor shall procure and maintain in full force and effect for the term of this Agreement, the following policies of insurance.

   C. For all insurance required by this Agreement, if a general aggregate limit applies, either the general aggregate limit shall apply separately to the Services or the general aggregate limit shall be twice the required occurrence limit.

D. If Contractor maintains broader coverage and/or higher limits than the minimums required herein, City requires and shall be entitled to the broader coverage and/or higher limits maintained by Contractor.

3. Coverages

A. Commercial General Liability (CGL)

a. CGL affords coverage at least as broad as Insurance Services Office "occurrence" form CG 00 01, including products and completed operations, property damage, bodily injury, and personal & advertising injury.

b. Limits shall be no less than $2,000,000 per occurrence.

c. Products-Completed Operations (PCO)
Contractor shall procure and submit to the City evidence of insurance for a period of at least ten (10) years from the time that all work under this Agreement is completed.

B. Automobile Liability Insurance (ALI)

a. ALI with coverage at least as broad as Insurance Services Office Form CA 0001 covering "Any Auto" (Symbol 1) for each accident for bodily injury and property damage with limit no less than $1,000,000 per occurrence.

b. If Contractor does not own any vehicles, Contractor may satisfy this requirement by providing the following:

i. A personal automobile liability policy for the contractor's own vehicle, if Contractor is a one-person operation; and

ii. A non-owned & hired auto liability endorsement to the commercial general liability policy if the contractor may lease, hire, rent, borrow, or use vehicles of others (e.g., employee-owned vehicles).

C. Workers' Compensation (WC)

a. Workers' Compensation as required by the State of California with statutory limits, and Employer's Liability Insurance with a limit of not less than $1,000,000 per accident for bodily injury or disease.

b. Self-Employment Affidavit or Declaration, signed under the penalty of perjury, if Contractor has no employees who will be performing work on behalf of the City, Contractor must provide:

i. A signed Self-Employment Affidavit Letter or a signed Declaration that Contractor is aware of the provisions of Section 3700 of the California Labor Code, which requires every employer to be insured against liability for workers' compensation or to undertake self-insurance in accordance with the provisions of that code, and that Contractor will

comply with such provisions before commencing the performance of the work of this contract; and

ii. A certification that Contractor does not employ any individual(s) in the course and scope of business operations.

4. Endorsements. Insurance policies shall not be in compliance if they include any limiting provision or endorsement that has not been submitted to the City for approval. The insurance policies shall contain or be endorsed to contain, the following provisions:

A. Commercial General Liability & Contractors Pollution Liability

a. Additional Insured. The City, its elected officials, officers, employees, volunteers, boards, and representatives shall be additional insureds with regard to liability and defense of suits or claims arising out of the work or operations performed by or on behalf of Contractor including materials, parts or equipment furnished in connection with such work or operations.

b. Additional Insured Endorsements shall not:

- Be limited to "Ongoing Operations".
- Exclude "Contractual Liability".
- Restrict coverage to the "Sole" liability of Contractor.
- Exclude "Third-Party-Over Actions".
- Contain any other exclusion contrary to this Agreement.

c. Additional Insured Endorsements shall be at least as broad as ISO Form(s) CG 20 10 11 85; or CG 2010 and CG 20 37.

d. Primary Insurance. This insurance shall be primary and any other insurance whether primary, excess, umbrella or contingent insurance, including deductible, or self-insurance available to the insureds added by endorsement shall be in excess of and shall not contribute with this insurance. Coverage shall be at least as broad as ISO CG 20 01 04 13.

B. Auto Liability

a. Additional Insured. The City, its elected officials, officers, employees, volunteers, boards, agents and representatives) shall be additional insureds with regard to liability and defense of suits or claims arising out of the work or operations performed by or on behalf of Contractor.

b. Primary Insurance. This insurance shall be primary and any other insurance whether primary, excess, umbrella or contingent insurance, including deductible, or self-insurance available to the insureds added by endorsement shall be in excess of and shall not contribute with this insurance.

C. Workers' Compensation. A waiver of subrogation stating that the insurer waives all rights of subrogation against the indemnified parties.

5. Miscellaneous.

A. Insurance Obligations of Contractor. The insurance obligations under this Agreement shall be: (1) all the Insurance coverage and/or limits carried by or available to Contractor; or (2) the minimum Insurance coverage requirements and/or limits shown in this Agreement; whichever is greater. Any insurance proceeds in excess of or broader than the minimum required coverage and/or minimum required limits, which are applicable to a given loss, shall be available to the City. No representation is made that the minimum insurance requirements of this agreement are sufficient to cover the obligations of the Contractor under this agreement.

B. Notice of Cancellation. Required insurance policies shall not be cancelled or the coverage reduced until a 30 day written notice of cancellation has been served upon City except 10 days shall be allowed for non-payment of premium.

C. Waiver of Subrogation. Required insurance coverages (except professional liability) shall not prohibit Contractor from waiving the right of subrogation prior to a loss. Contractor shall waive all rights of subrogation against the indemnified parties and policies shall contain or be endorsed to contain such a provision. This provision applies regardless of whether the City has received a waiver of subrogation endorsement from the insurer.

D. Evidence of Insurance. All policies, endorsements, certificates, and/or binders shall be subject to approval by the City as to form and content. These requirements are subject to amendment or waiver only if so approved in writing by the City. The City reserves the right to require complete, certified copies of all required insurance policies, including endorsements required by these specifications, at any time.

E. The certificates and endorsements for each insurance policy shall be signed by a person authorized by that insurer to bind coverage on its behalf. At least 15 days prior to the expiration of any such policy, evidence of insurance showing that such insurance coverage has been renewed or extended shall be filed with City. If such coverage is cancelled or reduced, Contractor shall, within 10 days after receipt of written notice of such cancellation or reduction of coverage, file with the City evidence of insurance showing that the required insurance has been reinstated or has been provided through another insurance company or companies.

F. Deductible or Self-Insured Retention. Any deductible or self-insured retention must be approved in writing by the City and shall protect the

indemnified parties in the same manner and to the same extent as they would have been protected had the policy or policies not contained a deductible or self-insured retention. The City may require Contractor to purchase coverage with a lower retention or provide proof of ability to pay losses and related investigations, claim administration and defense expenses within the retention.

G. Contractual Liability. The coverage provided shall apply to the obligations assumed by Contractor under the indemnity provisions of this Agreement.

H. Failure to Maintain Coverage. Contractor agrees to suspend and cease all operations hereunder during such period of time as the required insurance coverage is not in effect and evidence of insurance has not been furnished to the City. The City shall have the right to withhold any payment due until Contractor has fully complied with the insurance provisions of this Agreement.

I. In the event that Contractor's operations are suspended for failure to maintain required insurance coverage, Contractor shall not be entitled to an extension of time for completion of the Work because of production lost during suspension.

J. Acceptability of Insurers. Each such policy shall be from a company or companies with a current A.M. Best's rating of no less than A:VII and authorized to do business in the State of California, or otherwise allowed to place insurance through surplus line brokers under applicable provisions of the California Insurance Code or any federal law. Any other rating must be approved in writing by the City.

K. Claims Made Policies. If coverage, including coverage for Construction Defect claims, is written on a claims-made basis, the retroactive date on such insurance and all subsequent insurance shall coincide or precede the effective date of this Agreement and an extended reporting period shall be provided for a period of at least five years from termination or expiration of this Agreement.

L. Insurance for Subcontractors. Contractor shall be responsible for causing Subcontractors to purchase the same types and limits of insurance in compliance with the terms of this Agreement, including adding the City as an Additional Insured, providing Primary and Non-Contributory coverage and Waiver of Subrogation to the Subcontractor's policies. The Commercial General Liability Additional Insured Endorsement shall be on a form at least as broad as CG 20 38 04 13.

EXHIBIT D
Labor Code Requirements

1. Pursuant to Labor Code Section 1773.2, copies of the prevailing rate of per diem wages for each craft, classification, or type of worker needed to perform the Services are on file at City Hall and will be made available to any interested party on request. By initiating any Work, Contractor acknowledges receipt of a copy of the DIR determination of such prevailing rate of per diem wages, and Contractor shall post such rates at each job site covered by these Contract Documents.

2. Contractor shall comply with and be bound by the provisions of Labor Code Sections 1774 and 1775 concerning the payment of prevailing rates of wages to workers and the penalties for failure to pay prevailing wages. Contractor shall, as a penalty paid to the City, forfeit $200 for each calendar day, or portion thereof, for each worker paid less than the prevailing rates as determined by the DIR for the work or craft in which the worker is employed for any public work done pursuant to these Contract Documents by Contractor or by any subcontractor.

3. Contractor shall comply with and be bound by the provisions of Labor Code Section 1776, which requires Contractor and each subcontractor to (1) keep accurate payroll records and verify such records in writing under penalty of perjury, as specified in Section 1776, (2) certify and make such payroll records available for inspection as provided by Section 1776, and (3) inform the City of the location of the records. Contractor has 10 days in which to comply subsequent to receipt of a written notice requesting these records, or as a penalty to the City, Contractor shall forfeit $100 for each day, or portion thereof, for each worker, until strict compliance is effectuated. Upon the request of the Division of Labor Standards Enforcement, these penalties shall be withheld from progress payments then due.

4. Contractor and each subcontractor shall comply with and be bound by the provisions of Labor Code Section 1771.4(a)(3), which requires that each contractor and each subcontractor shall furnish the records specified in Section 1776 directly to the Labor Commissioner at least monthly, in a format prescribed by the Labor Commissioner.

5. Contractor acknowledges that eight hours labor constitutes a legal day's work. Contractor shall comply with and be bound by Labor Code Section 1810. Contractor shall comply with and be bound by the provisions of Labor Code Section 1813 concerning penalties for workers who work excess hours. Contractor shall, as a penalty paid to the City, forfeit $25 for each worker employed in the performance of the Services by Contractor or by any subcontractor for each calendar day during which such worker is required or permitted to work more than eight hours in any one calendar day and 40 hours in

any one calendar week in violation of the provisions of Division 2, Part 7, Chapter 1, Article 3 of the Labor Code. Pursuant to Labor Code Section 1815, work performed by employees of the Contractor in excess of eight hours per day, and 40 hours during any one week shall be permitted upon public work upon compensation for all hours worked in excess of eight hours per day at not less than 1.5 times the basic rate of pay.

6. Contractor shall comply with and be bound by the provisions of Labor Code Sections 1777.5, 1777.6 and 1777.7 and California Code of Regulations Title 8, Section 200 et seq. concerning the employment of apprentices on public works projects. Contractor shall be responsible for compliance with these Sections for all apprenticeable occupations. Before commencing the Services, Contractor shall provide the City with a copy of the information submitted to any applicable apprenticeship program. Within 60 days after concluding work, Contractor and each of its subcontractors shall submit to the City a verified statement of the journeyman and apprentice hours performed under this Agreement.

7. Contractor shall not perform work with any subcontractor that has been debarred or suspended pursuant to California Labor Code Section 1777.1 or any other federal or state law providing for the debarment of contractors from public works. Contractor and subcontractors shall not be debarred or suspended throughout the duration of this Agreement pursuant to Labor Code Section 1777.1 or any other federal or state law providing for the debarment of contractors from public works. If Contractor or any subcontractor becomes debarred or suspended during the duration of this Agreement, Contractor shall immediately notify the City.

8. In accordance with Labor Code Sections 1725.5 and 1771.1, no contractor or subcontractor shall be qualified to bid on, be listed in a bid, subject to the requirements of Section 4104 of the Public Contract Code, or engage in the performance of any contract for public work, unless currently registered and qualified to perform public work pursuant to Section 1725.5.

9. The Services are subject to compliance monitoring and enforcement by the DIR. Contractor shall post job site notices, as prescribed by regulation.

10. Labor Code Sections 1860 and 3700 provide that every contractor will be required to secure the payment of compensation to its employees. In accordance with the provisions of Labor Code Section 1861, by signing this Agreement, Contractor certifies as follows:

> "I am aware of the provisions of Section 3700 of the Labor Code which require every employer to be insured against liability for workers' compensation or to undertake self-insurance in accordance with the provisions of that code, and I will comply with such provisions before commencing the performance of the Work of this contract."

LANDSCAPE MAINTENANCE AGREEMENT

THIS LANDSCAPE MAINTENANCE AGREEMENT ("Agreement") is dated [August 17, 2021 for reference purposes and is executed by the City of Brea ("City"), a California municipal corporation, and [Nieves Landscape Inc.] ("Contractor"), a [California] [C Corporation]. Contractor's CSLB license number is [674709]. Contractor's DIR registration number is [1000012716].

RECITALS

A. The City desires to retain Contractor as an independent contractor to provide landscape maintenance services at the following City facility or Landscape and Lighting Maintenance District: [Maintenance District 1].

B. Contractor represents that it is fully qualified to perform such work by virtue of the training and experience of its personnel.

NOW, THEREFORE, the parties agree as follows:

1. Definitions. In addition to the terms defined above, the following definitions shall apply for purposes of this Agreement:

A. "Contract Administrator": Public Works Superintendent Bill Bowlus or a duly authorized designee.

B. "Contract Amount": [$ Sixteen Thousand, Three Hundred and Fifty Dollars ($ 16,350.00)] per year.

C. "Fee Schedule": the fee schedule set forth in the attached Exhibit B.

D. "Indemnitees": the City and its officers, employees, agents, and volunteers.

E. "Insurance Requirements": the insurance requirements set forth in the attached Exhibit C.

F. "Labor Code Requirements": the Labor Code requirements set forth in the attached Exhibit D.

G. "Liabilities": actual, alleged, or threatened causes of action, claims, costs, damages, demands, expenses (including fees of accountants, attorneys, and other professionals), judgments, liens, losses, penalties, and proceedings of any nature whatsoever.

H. "Services": the tasks set forth in the attached Exhibit A.

2. Services.

A. General Requirements. Contractor shall perform the Services in a timely, regular basis in accordance with applicable laws. Time is of the essence in the performance of this Agreement.

B. Labor Code Requirements. Contractor acknowledges that the Services are a "public work" within the scope of the Prevailing Wage Law (Labor Code Section 1720 et seq.). Contractor shall comply with the Labor Code Requirements.

C. Performance Standard. Contractor shall perform all work to the highest professional standards and in a manner reasonably satisfactory to the City. Contractor shall consult the Contract Administrator for any decisions that must be made by the City.

D. Customer Care. While fulfilling the terms of this Agreement, Contractor is performing as a representative of City and shall provide exceptional customer care. Any negative contact with City staff, residents, businesses, visitors, or other contractors shall be reported by Contractor immediately to the Contract Administrator.

E. Cooperation. In the event any claim is brought against the City relating to Contractor's performance of the Services, Contractor shall provide any reasonable assistance and cooperation that the City might require.

3. Term.

A. Base Term. The base term of this Agreement shall be just under four years, commencing on August 20, 2021 and expiring on June 30, 2025, unless extended or earlier terminated as provided herein.

B. Extension Options. The City shall have three options by which it may extend the term of this Agreement by one year at a time in its sole discretion. The one-year extension options may be exercised sequentially or concurrently. To exercise an extension option, the City shall give written notice to Contractor at least 30 days prior to the then-scheduled expiration date.

C. City Manager Authority. The City Manager may exercise extension options without prior City Council approval if both of the following conditions are satisfied: (i) the compensation to be paid Contractor for the applicable extension period has been approved and is included in a City Council-approved budget; and (ii) Contractor is not in breach of this Agreement.

D. Termination. If either party breaches this Agreement and fails to cure such breach within seven days of written notice, then the non-breaching party may immediately terminate this Agreement for cause. Additionally, the City may terminate this Agreement for convenience upon 60 days prior written notice to Contractor.

4. Compensation.

A. Full Satisfaction. The City shall compensate Contractor for performance of the Services, and Contractor agrees to accept as full satisfaction for such work, payment according to the Fee Schedule. In no event shall the compensation payable to Contractor under this Agreement exceed the Contract Amount.

B. Invoices. Contractor shall submit monthly invoices to the City for the Services. Each invoice shall itemize the work performed during the billing period and the amount due. Within 30 days of receipt of each invoice, the City shall pay all undisputed amounts on the invoice. City shall not withhold applicable taxes or other authorized deductions from the payments, and Contractor shall pay all required taxes on the payments.

C. CPI Adjustment: Subject to paragraph D below, starting July 1, 2022, and on an annual basis thereafter, the Fee Schedule shall be adjusted using the Consumer Price index for all Urban Consumers for the Los Angeles, Riverside, Anaheim Metropolitan Area (CPI-U) for the most recent twelve (12) months ending on December 31st prior to the July 1 rate adjustment based on data available from the United States Bureau of Labor Statistics.

D. Council Approval Requirement. The Fee Schedule shall not be revised during the term of this Agreement (including any extension periods) without prior approval by the City Council.

5. Independent Contractor Status. Contractor is, and shall at all times remain as to the City, an independent contractor. Contractor shall have no power to incur any debt, obligation, or liability on behalf of the City or to act otherwise on behalf of the City as an agent. Neither the City nor any of its officers, employees, agents, or volunteers shall have control over the conduct of Contractor except as set forth in this Agreement.

6. PERS Compliance. Contractor acknowledges that the City is a local agency member of California's Public Employees' Retirement System ("PERS"), and as such has certain pension reporting and contribution obligations to PERS on behalf of qualifying employees. Contractor agrees that, in providing its employees and any other personnel to the City to perform the Services, Contractor shall assure compliance with the Public Employees' Retirement Law (Government Code § 20000 et seq.) and the Public Employees' Pension Reform Act of 2013 (Government Code 7522 et seq.). Without limitation to the foregoing, Contractor shall assure compliance with regard to personnel who have active or inactive membership in PERS and to those who are retired annuitants and in performing this Agreement shall not assign or utilize any of its personnel in a manner that will cause the City to be in violation of the applicable retirement laws and regulations.

7. Indemnification.

A. Requirement. Contractor shall defend, hold harmless, and indemnify the Indemnitees from and against any Liabilities that arise out of the acts or omissions of Contractor or its subcontractors in connection with this Agreement.

B. Scope. Contractor's obligations under this section shall apply, without limitation, to Liabilities that partially involve active or passive negligence by the City. However, Contractor's obligations under this section shall not apply to Liabilities that arise from the sole negligence or willful misconduct of the City, as determined by final arbitration or court decision or by consensus of the parties.

C. Survival. Contractor's obligations under this section shall survive expiration or termination of this Agreement, and shall apply regardless of whether or not any insurance policies are determined to be applicable to the Liabilities.

8. Insurance. Without limiting Contractor's defense, hold harmless, and indemnification obligations under this Agreement, Contractor shall maintain policies of insurance as specified in the Insurance Requirements.

9. Accounting Records. During the term of this Agreement and for a period of three years after termination or expiration, Contractor shall maintain all accounting and financial records related to this Agreement in accordance with generally accepted accounting practices, and shall keep and make records available for inspection and audit by City representatives upon reasonable written notice.

10. Suspension. The Contract Administrator may suspend all or any part of the Services for the City's convenience or for work stoppages beyond the control of the parties. Written notice of a suspension shall be given to Contractor.

11. Notices. Any notices, invoices, or other documents related to this Agreement shall be deemed received on: (a) the day of delivery, if delivered by hand during the receiving party's regular business hours or by e-mail before or during the receiving party's regular business hours; (b) the business day after delivery, if delivered by e-mail after the receiving party's regular business hours; or (c) on the second business day following deposit in the United States mail, postage prepaid, to the addresses listed below, or to such other addresses as the parties may, from time to time, designate in writing.

City	Contractor
City of Brea	Nieves Landscape Inc.
545 N. Berry St.	1629 E. Edinger Ave.
Brea, CA 92821	Santa Ana, California 92705
Attn: Bill Bowlus	Attn: Greg Nieves, President
E-mail: BillB@ci.brea.ca.us	E-mail: gnieves@nieveslandscape.com

12. Assignability. Contractor shall not assign, transfer or subcontract any interest in this Agreement or the performance of any of its obligations without the City Manager's

prior written consent. This prohibition is not intended to preclude, and shall not be interpreted as precluding, Contractor from utilizing subcontractors identified in Contractor's proposal for the Services. Any attempt by Contractor to assign, transfer or subcontract any rights, duties or obligations in violation of this prohibition shall be void.

13. Litigation. In the event that either party shall commence legal action to enforce or interpret this Agreement, the prevailing party shall be entitled to recover its costs of suit including reasonable attorneys' fees. The venue for litigation shall be Orange County, California. The interpretation of this Agreement shall not be resolved by any rules of construction providing for interpretation against the party who causes the uncertainty to exist or against the party who drafted the disputed language.

14. Exhibits. The attached Exhibits A through D are incorporated into this Agreement by reference. In the event of any material discrepancy between the express provisions of this Agreement and the provisions of an Exhibit, the provisions of this Agreement shall prevail.

15. Incorporation of Mandatory Language. Each and every provision required by law to be inserted in this Agreement shall be deemed to be inserted and this Agreement shall be read and enforced as though such provision were included. If through mistake or otherwise any such provision is not inserted, or is not correctly inserted, then upon request of either party this Agreement shall promptly be amended to make such insertion or correction.

16. Entire Agreement. This Agreement (and the attached Exhibits) represents the entire and integrated contract between the parties regarding the Services. This Agreement supersedes all prior oral or written negotiations, representations and contracts related to the Services. This Agreement may not be amended, nor any provision or breach waived, except in a writing that is signed by the parties and that expressly refers to this Agreement.

[SIGNATURES ON FOLLOWING PAGE]

TO EXECUTE THIS AGREEMENT, the parties have caused their duly authorized representatives to sign below. Digital Signatures are acceptable if they conform to all requirements of Government Code Section 16.5.

[contractor name]

[use this signature block if contractor is a corporation]

☐ Chairperson ☒ President	☒ Secretary ☐ Asst. Secretary
☐ Vice President	☐ Chief Finance Officer ☐ Asst. Treasurer

[Pursuant to California Corporations Code Section 313, both signature lines must be executed unless the signatory holds at least one of the offices designated on each line.]

[use this signature block if contractor is a limited liability company]

Manager	Manager

[Pursuant to California Corporations Code Section 17703.01(d), both signature lines must be executed unless the articles of incorporation state that the firm is managed by only one manager.]

City of Brea

Steven Vargas, Mayor

Attest:

Lillian Harris-Neal, City Clerk

EXHIBIT A
Scope of Services

(attached)

EXHIBIT B
Fee Schedule

(attached)

EXHIBIT C
Insurance Requirements

1. Summary. Insurance coverages shall comply with requirements set forth herein.

   A. Rating Requirements. A /VII minimum.

   B. Commercial General Liability (CGL) + (PCO)
      a. $2,000,000 Minimum. Per occurrence.
      b. Additional Insured Endorsement. Required.
      c. Waiver of Subrogation. Required.

   C. Automobile Liability Insurance (ALI) (any auto)
      a. $2,000,000 Minimum. Per occurrence.
      b. Additional Insured Endorsement. Required.
      c. Waiver of Subrogation. Required.
      d. Exception. Not required if no vehicles used except for deliveries.

   D. Workers' Compensation (WC) and Employer's Liability (ELI)
      a. Statutory limits for Worker's Compensation.
      b. $1,000,000 Minimum. Per accident for bodily injury or disease.
      c. Additional Insured Endorsement. Not Required.
      d. Waiver of Subrogation. Required.
      e. Exception. Not required if no employees used for these Services.

2. General Requirements

   A. The City reserves the right to modify these requirements, including limits, based on the nature of the risk, prior experience, insurer, coverage, or other special circumstances. If the existing policies do not meet these requirements, Contractor agrees to amend, supplement or endorse the policies to do so.

   B. Without limiting Contractor's indemnity obligations hereunder, Contractor shall procure and maintain in full force and effect for the term of this Agreement, the following policies of insurance.

   C. For all insurance required by this Agreement, if a general aggregate limit applies, either the general aggregate limit shall apply separately to the Services or the general aggregate limit shall be twice the required occurrence limit.

D. If Contractor maintains broader coverage and/or higher limits than the minimums required herein, City requires and shall be entitled to the broader coverage and/or higher limits maintained by Contractor.

3. Coverages

A. Commercial General Liability (CGL)

a. CGL affords coverage at least as broad as Insurance Services Office "occurrence" form CG 00 01, including products and completed operations, property damage, bodily injury, and personal & advertising injury.

b. Limits shall be no less than $2,000,000 per occurrence.

c. Products-Completed Operations (PCO)
Contractor shall procure and submit to the City evidence of insurance for a period of at least ten (10) years from the time that all work under this Agreement is completed.

B. Automobile Liability Insurance (ALI)

a. ALI with coverage at least as broad as Insurance Services Office Form CA 0001 covering "Any Auto" (Symbol 1) for each accident for bodily injury and property damage with limit no less than $1,000,000 per occurrence.

b. If Contractor does not own any vehicles, Contractor may satisfy this requirement by providing the following:

i. A personal automobile liability policy for the contractor's own vehicle, if Contractor is a one-person operation; and

ii. A non-owned & hired auto liability endorsement to the commercial general liability policy if the contractor may lease, hire, rent, borrow, or use vehicles of others (e.g., employee-owned vehicles).

C. Workers' Compensation (WC)

a. Workers' Compensation as required by the State of California with statutory limits, and Employer's Liability Insurance with a limit of not less than $1,000,000 per accident for bodily injury or disease.

b. Self-Employment Affidavit or Declaration, signed under the penalty of perjury, if Contractor has no employees who will be performing work on behalf of the City, Contractor must provide:

i. A signed Self-Employment Affidavit Letter or a signed Declaration that Contractor is aware of the provisions of Section 3700 of the California Labor Code, which requires every employer to be insured against liability for workers' compensation or to undertake self-insurance in accordance with the provisions of that code, and that Contractor will

comply with such provisions before commencing the performance of the work of this contract; and

ii. A certification that Contractor does not employ any individual(s) in the course and scope of business operations.

4. Endorsements. Insurance policies shall not be in compliance if they include any limiting provision or endorsement that has not been submitted to the City for approval. The insurance policies shall contain or be endorsed to contain, the following provisions:

A. Commercial General Liability & Contractors Pollution Liability

a. Additional Insured. The City, its elected officials, officers, employees, volunteers, boards, and representatives shall be additional insureds with regard to liability and defense of suits or claims arising out of the work or operations performed by or on behalf of Contractor including materials, parts or equipment furnished in connection with such work or operations.

b. Additional Insured Endorsements shall not:

- Be limited to "Ongoing Operations".
- Exclude "Contractual Liability".
- Restrict coverage to the "Sole" liability of Contractor.
- Exclude "Third-Party-Over Actions".
- Contain any other exclusion contrary to this Agreement.

c. Additional Insured Endorsements shall be at least as broad as ISO Form(s) CG 20 10 11 85; or CG 2010 and CG 20 37.

d. Primary Insurance. This insurance shall be primary and any other insurance whether primary, excess, umbrella or contingent insurance, including deductible, or self-insurance available to the insureds added by endorsement shall be in excess of and shall not contribute with this insurance. Coverage shall be at least as broad as ISO CG 20 01 04 13.

B. Auto Liability

a. Additional Insured. The City, its elected officials, officers, employees, volunteers, boards, agents and representatives) shall be additional insureds with regard to liability and defense of suits or claims arising out of the work or operations performed by or on behalf of Contractor.

b. Primary Insurance. This insurance shall be primary and any other insurance whether primary, excess, umbrella or contingent insurance, including deductible, or self-insurance available to the insureds added by endorsement shall be in excess of and shall not contribute with this insurance.

C. Workers' Compensation. A waiver of subrogation stating that the insurer waives all rights of subrogation against the indemnified parties.

5. Miscellaneous.

A. Insurance Obligations of Contractor. The insurance obligations under this Agreement shall be: (1) all the Insurance coverage and/or limits carried by or available to Contractor; or (2) the minimum Insurance coverage requirements and/or limits shown in this Agreement; whichever is greater. Any insurance proceeds in excess of or broader than the minimum required coverage and/or minimum required limits, which are applicable to a given loss, shall be available to the City. No representation is made that the minimum insurance requirements of this agreement are sufficient to cover the obligations of the Contractor under this agreement.

B. Notice of Cancellation. Required insurance policies shall not be cancelled or the coverage reduced until a 30 day written notice of cancellation has been served upon City except 10 days shall be allowed for non-payment of premium.

C. Waiver of Subrogation. Required insurance coverages (except professional liability) shall not prohibit Contractor from waiving the right of subrogation prior to a loss. Contractor shall waive all rights of subrogation against the indemnified parties and policies shall contain or be endorsed to contain such a provision. This provision applies regardless of whether the City has received a waiver of subrogation endorsement from the insurer.

D. Evidence of Insurance. All policies, endorsements, certificates, and/or binders shall be subject to approval by the City as to form and content. These requirements are subject to amendment or waiver only if so approved in writing by the City. The City reserves the right to require complete, certified copies of all required insurance policies, including endorsements required by these specifications, at any time.

E. The certificates and endorsements for each insurance policy shall be signed by a person authorized by that insurer to bind coverage on its behalf. At least 15 days prior to the expiration of any such policy, evidence of insurance showing that such insurance coverage has been renewed or extended shall be filed with City. If such coverage is cancelled or reduced, Contractor shall, within 10 days after receipt of written notice of such cancellation or reduction of coverage, file with the City evidence of insurance showing that the required insurance has been reinstated or has been provided through another insurance company or companies.

F. Deductible or Self-Insured Retention. Any deductible or self-insured retention must be approved in writing by the City and shall protect the

indemnified parties in the same manner and to the same extent as they would have been protected had the policy or policies not contained a deductible or self-insured retention. The City may require Contractor to purchase coverage with a lower retention or provide proof of ability to pay losses and related investigations, claim administration and defense expenses within the retention.

G. Contractual Liability. The coverage provided shall apply to the obligations assumed by Contractor under the indemnity provisions of this Agreement.

H. Failure to Maintain Coverage. Contractor agrees to suspend and cease all operations hereunder during such period of time as the required insurance coverage is not in effect and evidence of insurance has not been furnished to the City. The City shall have the right to withhold any payment due until Contractor has fully complied with the insurance provisions of this Agreement.

I. In the event that Contractor's operations are suspended for failure to maintain required insurance coverage, Contractor shall not be entitled to an extension of time for completion of the Work because of production lost during suspension.

J. Acceptability of Insurers. Each such policy shall be from a company or companies with a current A.M. Best's rating of no less than A:VII and authorized to do business in the State of California, or otherwise allowed to place insurance through surplus line brokers under applicable provisions of the California Insurance Code or any federal law. Any other rating must be approved in writing by the City.

K. Claims Made Policies. If coverage, including coverage for Construction Defect claims, is written on a claims-made basis, the retroactive date on such insurance and all subsequent insurance shall coincide or precede the effective date of this Agreement and an extended reporting period shall be provided for a period of at least five years from termination or expiration of this Agreement.

L. Insurance for Subcontractors. Contractor shall be responsible for causing Subcontractors to purchase the same types and limits of insurance in compliance with the terms of this Agreement, including adding the City as an Additional Insured, providing Primary and Non-Contributory coverage and Waiver of Subrogation to the Subcontractor's policies. The Commercial General Liability Additional Insured Endorsement shall be on a form at least as broad as CG 20 38 04 13.

EXHIBIT D
Labor Code Requirements

1. Pursuant to Labor Code Section 1773.2, copies of the prevailing rate of per diem wages for each craft, classification, or type of worker needed to perform the Services are on file at City Hall and will be made available to any interested party on request. By initiating any Work, Contractor acknowledges receipt of a copy of the DIR determination of such prevailing rate of per diem wages, and Contractor shall post such rates at each job site covered by these Contract Documents.

2. Contractor shall comply with and be bound by the provisions of Labor Code Sections 1774 and 1775 concerning the payment of prevailing rates of wages to workers and the penalties for failure to pay prevailing wages. Contractor shall, as a penalty paid to the City, forfeit $200 for each calendar day, or portion thereof, for each worker paid less than the prevailing rates as determined by the DIR for the work or craft in which the worker is employed for any public work done pursuant to these Contract Documents by Contractor or by any subcontractor.

3. Contractor shall comply with and be bound by the provisions of Labor Code Section 1776, which requires Contractor and each subcontractor to (1) keep accurate payroll records and verify such records in writing under penalty of perjury, as specified in Section 1776, (2) certify and make such payroll records available for inspection as provided by Section 1776, and (3) inform the City of the location of the records. Contractor has 10 days in which to comply subsequent to receipt of a written notice requesting these records, or as a penalty to the City, Contractor shall forfeit $100 for each day, or portion thereof, for each worker, until strict compliance is effectuated. Upon the request of the Division of Labor Standards Enforcement, these penalties shall be withheld from progress payments then due.

4. Contractor and each subcontractor shall comply with and be bound by the provisions of Labor Code Section 1771.4(a)(3), which requires that each contractor and each subcontractor shall furnish the records specified in Section 1776 directly to the Labor Commissioner at least monthly, in a format prescribed by the Labor Commissioner.

5. Contractor acknowledges that eight hours labor constitutes a legal day's work. Contractor shall comply with and be bound by Labor Code Section 1810. Contractor shall comply with and be bound by the provisions of Labor Code Section 1813 concerning penalties for workers who work excess hours. Contractor shall, as a penalty paid to the City, forfeit $25 for each worker employed in the performance of the Services by Contractor or by any subcontractor for each calendar day during which such worker is required or permitted to work more than eight hours in any one calendar day and 40 hours in

any one calendar week in violation of the provisions of Division 2, Part 7, Chapter 1, Article 3 of the Labor Code. Pursuant to Labor Code Section 1815, work performed by employees of the Contractor in excess of eight hours per day, and 40 hours during any one week shall be permitted upon public work upon compensation for all hours worked in excess of eight hours per day at not less than 1.5 times the basic rate of pay.

6. Contractor shall comply with and be bound by the provisions of Labor Code Sections 1777.5, 1777.6 and 1777.7 and California Code of Regulations Title 8, Section 200 et seq. concerning the employment of apprentices on public works projects. Contractor shall be responsible for compliance with these Sections for all apprenticeable occupations. Before commencing the Services, Contractor shall provide the City with a copy of the information submitted to any applicable apprenticeship program. Within 60 days after concluding work, Contractor and each of its subcontractors shall submit to the City a verified statement of the journeyman and apprentice hours performed under this Agreement.

7. Contractor shall not perform work with any subcontractor that has been debarred or suspended pursuant to California Labor Code Section 1777.1 or any other federal or state law providing for the debarment of contractors from public works. Contractor and subcontractors shall not be debarred or suspended throughout the duration of this Agreement pursuant to Labor Code Section 1777.1 or any other federal or state law providing for the debarment of contractors from public works. If Contractor or any subcontractor becomes debarred or suspended during the duration of this Agreement, Contractor shall immediately notify the City.

8. In accordance with Labor Code Sections 1725.5 and 1771.1, no contractor or subcontractor shall be qualified to bid on, be listed in a bid, subject to the requirements of Section 4104 of the Public Contract Code, or engage in the performance of any contract for public work, unless currently registered and qualified to perform public work pursuant to Section 1725.5.

9. The Services are subject to compliance monitoring and enforcement by the DIR. Contractor shall post job site notices, as prescribed by regulation.

10. Labor Code Sections 1860 and 3700 provide that every contractor will be required to secure the payment of compensation to its employees. In accordance with the provisions of Labor Code Section 1861, by signing this Agreement, Contractor certifies as follows:

> "I am aware of the provisions of Section 3700 of the Labor Code which require every employer to be insured against liability for workers' compensation or to undertake self-insurance in accordance with the provisions of that code, and I will comply with such provisions before commencing the performance of the Work of this contract."

LANDSCAPE MAINTENANCE AGREEMENT

THIS LANDSCAPE MAINTENANCE AGREEMENT ("Agreement") is dated [August 17, 2021 for reference purposes and is executed by the City of Brea ("City"), a California municipal corporation, and [Nieves Landscape Inc.] ("Contractor"), a [California] [C Corporation]. Contractor's CSLB license number is [674709]. Contractor's DIR registration number is [1000012716].

RECITALS

A. The City desires to retain Contractor as an independent contractor to provide landscape maintenance services at the following City facility or Landscape and Lighting Maintenance District: [Maintenance District 3].

B. Contractor represents that it is fully qualified to perform such work by virtue of the training and experience of its personnel.

NOW, THEREFORE, the parties agree as follows:

1. Definitions. In addition to the terms defined above, the following definitions shall apply for purposes of this Agreement:

A. "Contract Administrator": Public Works Superintendent Bill Bowlus or a duly authorized designee.

B. "Contract Amount": [$ Twenty-Seven Thousand Dollars ($ 27,000.00)] per year.

C. "Fee Schedule": the fee schedule set forth in the attached Exhibit B.

D. "Indemnitees": the City and its officers, employees, agents, and volunteers.

E. "Insurance Requirements": the insurance requirements set forth in the attached Exhibit C.

F. "Labor Code Requirements": the Labor Code requirements set forth in the attached Exhibit D.

G. "Liabilities": actual, alleged, or threatened causes of action, claims, costs, damages, demands, expenses (including fees of accountants, attorneys, and other professionals), judgments, liens, losses, penalties, and proceedings of any nature whatsoever.

H. "Services": the tasks set forth in the attached Exhibit A.

2. Services.

A. General Requirements. Contractor shall perform the Services in a timely, regular basis in accordance with applicable laws. Time is of the essence in the performance of this Agreement.

B. Labor Code Requirements. Contractor acknowledges that the Services are a "public work" within the scope of the Prevailing Wage Law (Labor Code Section 1720 et seq.). Contractor shall comply with the Labor Code Requirements.

C. Performance Standard. Contractor shall perform all work to the highest professional standards and in a manner reasonably satisfactory to the City. Contractor shall consult the Contract Administrator for any decisions that must be made by the City.

D. Customer Care. While fulfilling the terms of this Agreement, Contractor is performing as a representative of City and shall provide exceptional customer care. Any negative contact with City staff, residents, businesses, visitors, or other contractors shall be reported by Contractor immediately to the Contract Administrator.

E. Cooperation. In the event any claim is brought against the City relating to Contractor's performance of the Services, Contractor shall provide any reasonable assistance and cooperation that the City might require.

3. Term.

A. Base Term. The base term of this Agreement shall be just under four years, commencing on August 20, 2021 and expiring on June 30, 2025, unless extended or earlier terminated as provided herein.

B. Extension Options. The City shall have three options by which it may extend the term of this Agreement by one year at a time in its sole discretion. The one-year extension options may be exercised sequentially or concurrently. To exercise an extension option, the City shall give written notice to Contractor at least 30 days prior to the then-scheduled expiration date.

C. City Manager Authority. The City Manager may exercise extension options without prior City Council approval if both of the following conditions are satisfied: (i) the compensation to be paid Contractor for the applicable extension period has been approved and is included in a City Council-approved budget; and (ii) Contractor is not in breach of this Agreement.

D. Termination. If either party breaches this Agreement and fails to cure such breach within seven days of written notice, then the non-breaching party may immediately terminate this Agreement for cause. Additionally, the City may terminate this Agreement for convenience upon 60 days prior written notice to Contractor.

4. Compensation.

A. Full Satisfaction. The City shall compensate Contractor for performance of the Services, and Contractor agrees to accept as full satisfaction for such work, payment according to the Fee Schedule. In no event shall the compensation payable to Contractor under this Agreement exceed the Contract Amount.

B. Invoices. Contractor shall submit monthly invoices to the City for the Services. Each invoice shall itemize the work performed during the billing period and the amount due. Within 30 days of receipt of each invoice, the City shall pay all undisputed amounts on the invoice. City shall not withhold applicable taxes or other authorized deductions from the payments, and Contractor shall pay all required taxes on the payments.

C. CPI Adjustment: Subject to paragraph D below, starting July 1, 2022, and on an annual basis thereafter, the Fee Schedule shall be adjusted using the Consumer Price index for all Urban Consumers for the Los Angeles, Riverside, Anaheim Metropolitan Area (CPI-U) for the most recent twelve (12) months ending on December 31st prior to the July 1 rate adjustment based on data available from the United States Bureau of Labor Statistics.

D. Council Approval Requirement. The Fee Schedule shall not be revised during the term of this Agreement (including any extension periods) without prior approval by the City Council.

5. Independent Contractor Status. Contractor is, and shall at all times remain as to the City, an independent contractor. Contractor shall have no power to incur any debt, obligation, or liability on behalf of the City or to act otherwise on behalf of the City as an agent. Neither the City nor any of its officers, employees, agents, or volunteers shall have control over the conduct of Contractor except as set forth in this Agreement.

6. PERS Compliance. Contractor acknowledges that the City is a local agency member of California's Public Employees' Retirement System ("PERS"), and as such has certain pension reporting and contribution obligations to PERS on behalf of qualifying employees. Contractor agrees that, in providing its employees and any other personnel to the City to perform the Services, Contractor shall assure compliance with the Public Employees' Retirement Law (Government Code § 20000 et seq.) and the Public Employees' Pension Reform Act of 2013 (Government Code 7522 et seq.). Without limitation to the foregoing, Contractor shall assure compliance with regard to personnel who have active or inactive membership in PERS and to those who are retired annuitants and in performing this Agreement shall not assign or utilize any of its personnel in a manner that will cause the City to be in violation of the applicable retirement laws and regulations.

7. Indemnification.

A. Requirement. Contractor shall defend, hold harmless, and indemnify the Indemnitees from and against any Liabilities that arise out of the acts or omissions of Contractor or its subcontractors in connection with this Agreement.

B. Scope. Contractor's obligations under this section shall apply, without limitation, to Liabilities that partially involve active or passive negligence by the City. However, Contractor's obligations under this section shall not apply to Liabilities that arise from the sole negligence or willful misconduct of the City, as determined by final arbitration or court decision or by consensus of the parties.

C. Survival. Contractor's obligations under this section shall survive expiration or termination of this Agreement, and shall apply regardless of whether or not any insurance policies are determined to be applicable to the Liabilities.

8. Insurance. Without limiting Contractor's defense, hold harmless, and indemnification obligations under this Agreement, Contractor shall maintain policies of insurance as specified in the Insurance Requirements.

9. Accounting Records. During the term of this Agreement and for a period of three years after termination or expiration, Contractor shall maintain all accounting and financial records related to this Agreement in accordance with generally accepted accounting practices, and shall keep and make records available for inspection and audit by City representatives upon reasonable written notice.

10. Suspension. The Contract Administrator may suspend all or any part of the Services for the City's convenience or for work stoppages beyond the control of the parties. Written notice of a suspension shall be given to Contractor.

11. Notices. Any notices, invoices, or other documents related to this Agreement shall be deemed received on: (a) the day of delivery, if delivered by hand during the receiving party's regular business hours or by e-mail before or during the receiving party's regular business hours; (b) the business day after delivery, if delivered by e-mail after the receiving party's regular business hours; or (c) on the second business day following deposit in the United States mail, postage prepaid, to the addresses listed below, or to such other addresses as the parties may, from time to time, designate in writing.

City	Contractor
City of Brea	Nieves Landscape Inc.
545 N. Berry St.	1629 E. Edinger Ave.
Brea, CA 92821	Santa Ana, California 92705
Attn: Bill Bowlus	Attn: Greg Nieves, President
E-mail: BillB@ci.brea.ca.us	E-mail: gnieves@nieveslandscape.com

12. Assignability. Contractor shall not assign, transfer or subcontract any interest in this Agreement or the performance of any of its obligations without the City Manager's

prior written consent. This prohibition is not intended to preclude, and shall not be interpreted as precluding, Contractor from utilizing subcontractors identified in Contractor's proposal for the Services. Any attempt by Contractor to assign, transfer or subcontract any rights, duties or obligations in violation of this prohibition shall be void.

13. Litigation. In the event that either party shall commence legal action to enforce or interpret this Agreement, the prevailing party shall be entitled to recover its costs of suit including reasonable attorneys' fees. The venue for litigation shall be Orange County, California. The interpretation of this Agreement shall not be resolved by any rules of construction providing for interpretation against the party who causes the uncertainty to exist or against the party who drafted the disputed language.

14. Exhibits. The attached Exhibits A through D are incorporated into this Agreement by reference. In the event of any material discrepancy between the express provisions of this Agreement and the provisions of an Exhibit, the provisions of this Agreement shall prevail.

15. Incorporation of Mandatory Language. Each and every provision required by law to be inserted in this Agreement shall be deemed to be inserted and this Agreement shall be read and enforced as though such provision were included. If through mistake or otherwise any such provision is not inserted, or is not correctly inserted, then upon request of either party this Agreement shall promptly be amended to make such insertion or correction.

16. Entire Agreement. This Agreement (and the attached Exhibits) represents the entire and integrated contract between the parties regarding the Services. This Agreement supersedes all prior oral or written negotiations, representations and contracts related to the Services. This Agreement may not be amended, nor any provision or breach waived, except in a writing that is signed by the parties and that expressly refers to this Agreement.

[SIGNATURES ON FOLLOWING PAGE]

TO EXECUTE THIS AGREEMENT, the parties have caused their duly authorized representatives to sign below. Digital Signatures are acceptable if they conform to all requirements of Government Code Section 16.5.

[contractor name]

[use this signature block if contractor is a corporation]

☐ Chairperson ☐ President	☒ Secretary ☐ Asst. Secretary
☐ Vice President	☐ Chief Finance Officer ☐ Asst. Treasurer

[Pursuant to California Corporations Code Section 313, both signature lines must be executed unless the signatory holds at least one of the offices designated on each line.]

[use this signature block if contractor is a limited liability company]

Manager	Manager

[Pursuant to California Corporations Code Section 17703.01(d), both signature lines must be executed unless the articles of incorporation state that the firm is managed by only one manager.]

City of Brea

Steven Vargas, Mayor

Attest:

Lillian Harris-Neal, City Clerk

EXHIBIT A
Scope of Services

(attached)

EXHIBIT B
Fee Schedule

(attached)

EXHIBIT C
Insurance Requirements

1. Summary. Insurance coverages shall comply with requirements set forth herein.

   A. Rating Requirements. A /VII minimum.

   B. Commercial General Liability (CGL) + (PCO)
      a. $2,000,000 Minimum. Per occurrence.
      b. Additional Insured Endorsement. Required.
      c. Waiver of Subrogation. Required.

   C. Automobile Liability Insurance (ALI) (any auto)
      a. $2,000,000 Minimum. Per occurrence.
      b. Additional Insured Endorsement. Required.
      c. Waiver of Subrogation. Required.
      d. Exception. Not required if no vehicles used except for deliveries.

   D. Workers' Compensation (WC) and Employer's Liability (ELI)
      a. Statutory limits for Worker's Compensation.
      b. $1,000,000 Minimum. Per accident for bodily injury or disease.
      c. Additional Insured Endorsement. Not Required.
      d. Waiver of Subrogation. Required.
      e. Exception. Not required if no employees used for these Services.

2. General Requirements

   A. The City reserves the right to modify these requirements, including limits, based on the nature of the risk, prior experience, insurer, coverage, or other special circumstances. If the existing policies do not meet these requirements, Contractor agrees to amend, supplement or endorse the policies to do so.

   B. Without limiting Contractor's indemnity obligations hereunder, Contractor shall procure and maintain in full force and effect for the term of this Agreement, the following policies of insurance.

   C. For all insurance required by this Agreement, if a general aggregate limit applies, either the general aggregate limit shall apply separately to the Services or the general aggregate limit shall be twice the required occurrence limit.

D. If Contractor maintains broader coverage and/or higher limits than the minimums required herein, City requires and shall be entitled to the broader coverage and/or higher limits maintained by Contractor.

3. Coverages

A. Commercial General Liability (CGL)

a. CGL affords coverage at least as broad as Insurance Services Office "occurrence" form CG 00 01, including products and completed operations, property damage, bodily injury, and personal & advertising injury.

b. Limits shall be no less than $2,000,000 per occurrence.

c. Products-Completed Operations (PCO)
Contractor shall procure and submit to the City evidence of insurance for a period of at least ten (10) years from the time that all work under this Agreement is completed.

B. Automobile Liability Insurance (ALI)

a. ALI with coverage at least as broad as Insurance Services Office Form CA 0001 covering "Any Auto" (Symbol 1) for each accident for bodily injury and property damage with limit no less than $1,000,000 per occurrence.

b. If Contractor does not own any vehicles, Contractor may satisfy this requirement by providing the following:

i. A personal automobile liability policy for the contractor's own vehicle, if Contractor is a one-person operation; and

ii. A non-owned & hired auto liability endorsement to the commercial general liability policy if the contractor may lease, hire, rent, borrow, or use vehicles of others (e.g., employee-owned vehicles).

C. Workers' Compensation (WC)

a. Workers' Compensation as required by the State of California with statutory limits, and Employer's Liability Insurance with a limit of not less than $1,000,000 per accident for bodily injury or disease.

b. Self-Employment Affidavit or Declaration, signed under the penalty of perjury, if Contractor has no employees who will be performing work on behalf of the City, Contractor must provide:

i. A signed Self-Employment Affidavit Letter or a signed Declaration that Contractor is aware of the provisions of Section 3700 of the California Labor Code, which requires every employer to be insured against liability for workers' compensation or to undertake self-insurance in accordance with the provisions of that code, and that Contractor will

comply with such provisions before commencing the performance of the work of this contract; and

ii. A certification that Contractor does not employ any individual(s) in the course and scope of business operations.

4. Endorsements. Insurance policies shall not be in compliance if they include any limiting provision or endorsement that has not been submitted to the City for approval. The insurance policies shall contain or be endorsed to contain, the following provisions:

A. Commercial General Liability & Contractors Pollution Liability

a. Additional Insured. The City, its elected officials, officers, employees, volunteers, boards, and representatives shall be additional insureds with regard to liability and defense of suits or claims arising out of the work or operations performed by or on behalf of Contractor including materials, parts or equipment furnished in connection with such work or operations.

b. Additional Insured Endorsements shall not:

- Be limited to "Ongoing Operations".
- Exclude "Contractual Liability".
- Restrict coverage to the "Sole" liability of Contractor.
- Exclude "Third-Party-Over Actions".
- Contain any other exclusion contrary to this Agreement.

c. Additional Insured Endorsements shall be at least as broad as ISO Form(s) CG 20 10 11 85; or CG 2010 and CG 20 37.

d. Primary Insurance. This insurance shall be primary and any other insurance whether primary, excess, umbrella or contingent insurance, including deductible, or self-insurance available to the insureds added by endorsement shall be in excess of and shall not contribute with this insurance. Coverage shall be at least as broad as ISO CG 20 01 04 13.

B. Auto Liability

a. Additional Insured. The City, its elected officials, officers, employees, volunteers, boards, agents and representatives) shall be additional insureds with regard to liability and defense of suits or claims arising out of the work or operations performed by or on behalf of Contractor.

b. Primary Insurance. This insurance shall be primary and any other insurance whether primary, excess, umbrella or contingent insurance, including deductible, or self-insurance available to the insureds added by endorsement shall be in excess of and shall not contribute with this insurance.

C. Workers' Compensation. A waiver of subrogation stating that the insurer waives all rights of subrogation against the indemnified parties.

5. Miscellaneous.

A. Insurance Obligations of Contractor. The insurance obligations under this Agreement shall be: (1) all the Insurance coverage and/or limits carried by or available to Contractor; or (2) the minimum Insurance coverage requirements and/or limits shown in this Agreement; whichever is greater. Any insurance proceeds in excess of or broader than the minimum required coverage and/or minimum required limits, which are applicable to a given loss, shall be available to the City. No representation is made that the minimum insurance requirements of this agreement are sufficient to cover the obligations of the Contractor under this agreement.

B. Notice of Cancellation. Required insurance policies shall not be cancelled or the coverage reduced until a 30 day written notice of cancellation has been served upon City except 10 days shall be allowed for non-payment of premium.

C. Waiver of Subrogation. Required insurance coverages (except professional liability) shall not prohibit Contractor from waiving the right of subrogation prior to a loss. Contractor shall waive all rights of subrogation against the indemnified parties and policies shall contain or be endorsed to contain such a provision. This provision applies regardless of whether the City has received a waiver of subrogation endorsement from the insurer.

D. Evidence of Insurance. All policies, endorsements, certificates, and/or binders shall be subject to approval by the City as to form and content. These requirements are subject to amendment or waiver only if so approved in writing by the City. The City reserves the right to require complete, certified copies of all required insurance policies, including endorsements required by these specifications, at any time.

E. The certificates and endorsements for each insurance policy shall be signed by a person authorized by that insurer to bind coverage on its behalf. At least 15 days prior to the expiration of any such policy, evidence of insurance showing that such insurance coverage has been renewed or extended shall be filed with City. If such coverage is cancelled or reduced, Contractor shall, within 10 days after receipt of written notice of such cancellation or reduction of coverage, file with the City evidence of insurance showing that the required insurance has been reinstated or has been provided through another insurance company or companies.

F. Deductible or Self-Insured Retention. Any deductible or self-insured retention must be approved in writing by the City and shall protect the

indemnified parties in the same manner and to the same extent as they would have been protected had the policy or policies not contained a deductible or self-insured retention. The City may require Contractor to purchase coverage with a lower retention or provide proof of ability to pay losses and related investigations, claim administration and defense expenses within the retention.

G. Contractual Liability. The coverage provided shall apply to the obligations assumed by Contractor under the indemnity provisions of this Agreement.

H. Failure to Maintain Coverage. Contractor agrees to suspend and cease all operations hereunder during such period of time as the required insurance coverage is not in effect and evidence of insurance has not been furnished to the City. The City shall have the right to withhold any payment due until Contractor has fully complied with the insurance provisions of this Agreement.

I. In the event that Contractor's operations are suspended for failure to maintain required insurance coverage, Contractor shall not be entitled to an extension of time for completion of the Work because of production lost during suspension.

J. Acceptability of Insurers. Each such policy shall be from a company or companies with a current A.M. Best's rating of no less than A:VII and authorized to do business in the State of California, or otherwise allowed to place insurance through surplus line brokers under applicable provisions of the California Insurance Code or any federal law. Any other rating must be approved in writing by the City.

K. Claims Made Policies. If coverage, including coverage for Construction Defect claims, is written on a claims-made basis, the retroactive date on such insurance and all subsequent insurance shall coincide or precede the effective date of this Agreement and an extended reporting period shall be provided for a period of at least five years from termination or expiration of this Agreement.

L. Insurance for Subcontractors. Contractor shall be responsible for causing Subcontractors to purchase the same types and limits of insurance in compliance with the terms of this Agreement, including adding the City as an Additional Insured, providing Primary and Non-Contributory coverage and Waiver of Subrogation to the Subcontractor's policies. The Commercial General Liability Additional Insured Endorsement shall be on a form at least as broad as CG 20 38 04 13.

EXHIBIT D
Labor Code Requirements

1. Pursuant to Labor Code Section 1773.2, copies of the prevailing rate of per diem wages for each craft, classification, or type of worker needed to perform the Services are on file at City Hall and will be made available to any interested party on request. By initiating any Work, Contractor acknowledges receipt of a copy of the DIR determination of such prevailing rate of per diem wages, and Contractor shall post such rates at each job site covered by these Contract Documents.

2. Contractor shall comply with and be bound by the provisions of Labor Code Sections 1774 and 1775 concerning the payment of prevailing rates of wages to workers and the penalties for failure to pay prevailing wages. Contractor shall, as a penalty paid to the City, forfeit $200 for each calendar day, or portion thereof, for each worker paid less than the prevailing rates as determined by the DIR for the work or craft in which the worker is employed for any public work done pursuant to these Contract Documents by Contractor or by any subcontractor.

3. Contractor shall comply with and be bound by the provisions of Labor Code Section 1776, which requires Contractor and each subcontractor to (1) keep accurate payroll records and verify such records in writing under penalty of perjury, as specified in Section 1776, (2) certify and make such payroll records available for inspection as provided by Section 1776, and (3) inform the City of the location of the records. Contractor has 10 days in which to comply subsequent to receipt of a written notice requesting these records, or as a penalty to the City, Contractor shall forfeit $100 for each day, or portion thereof, for each worker, until strict compliance is effectuated. Upon the request of the Division of Labor Standards Enforcement, these penalties shall be withheld from progress payments then due.

4. Contractor and each subcontractor shall comply with and be bound by the provisions of Labor Code Section 1771.4(a)(3), which requires that each contractor and each subcontractor shall furnish the records specified in Section 1776 directly to the Labor Commissioner at least monthly, in a format prescribed by the Labor Commissioner.

5. Contractor acknowledges that eight hours labor constitutes a legal day's work. Contractor shall comply with and be bound by Labor Code Section 1810. Contractor shall comply with and be bound by the provisions of Labor Code Section 1813 concerning penalties for workers who work excess hours. Contractor shall, as a penalty paid to the City, forfeit $25 for each worker employed in the performance of the Services by Contractor or by any subcontractor for each calendar day during which such worker is required or permitted to work more than eight hours in any one calendar day and 40 hours in

any one calendar week in violation of the provisions of Division 2, Part 7, Chapter 1, Article 3 of the Labor Code. Pursuant to Labor Code Section 1815, work performed by employees of the Contractor in excess of eight hours per day, and 40 hours during any one week shall be permitted upon public work upon compensation for all hours worked in excess of eight hours per day at not less than 1.5 times the basic rate of pay.

6. Contractor shall comply with and be bound by the provisions of Labor Code Sections 1777.5, 1777.6 and 1777.7 and California Code of Regulations Title 8, Section 200 et seq. concerning the employment of apprentices on public works projects. Contractor shall be responsible for compliance with these Sections for all apprenticeable occupations. Before commencing the Services, Contractor shall provide the City with a copy of the information submitted to any applicable apprenticeship program. Within 60 days after concluding work, Contractor and each of its subcontractors shall submit to the City a verified statement of the journeyman and apprentice hours performed under this Agreement.

7. Contractor shall not perform work with any subcontractor that has been debarred or suspended pursuant to California Labor Code Section 1777.1 or any other federal or state law providing for the debarment of contractors from public works. Contractor and subcontractors shall not be debarred or suspended throughout the duration of this Agreement pursuant to Labor Code Section 1777.1 or any other federal or state law providing for the debarment of contractors from public works. If Contractor or any subcontractor becomes debarred or suspended during the duration of this Agreement, Contractor shall immediately notify the City.

8. In accordance with Labor Code Sections 1725.5 and 1771.1, no contractor or subcontractor shall be qualified to bid on, be listed in a bid, subject to the requirements of Section 4104 of the Public Contract Code, or engage in the performance of any contract for public work, unless currently registered and qualified to perform public work pursuant to Section 1725.5.

9. The Services are subject to compliance monitoring and enforcement by the DIR. Contractor shall post job site notices, as prescribed by regulation.

10. Labor Code Sections 1860 and 3700 provide that every contractor will be required to secure the payment of compensation to its employees. In accordance with the provisions of Labor Code Section 1861, by signing this Agreement, Contractor certifies as follows:

> "I am aware of the provisions of Section 3700 of the Labor Code which require every employer to be insured against liability for workers' compensation or to undertake self-insurance in accordance with the provisions of that code, and I will comply with such provisions before commencing the performance of the Work of this contract."

LANDSCAPE MAINTENANCE AGREEMENT

THIS LANDSCAPE MAINTENANCE AGREEMENT ("Agreement") is dated [August 17, 2021 for reference purposes and is executed by the City of Brea ("City"), a California municipal corporation, and [Nieves Landscape Inc.] ("Contractor"), a [California] [C Corporation]. Contractor's CSLB license number is [674709]. Contractor's DIR registration number is [1000012716].

RECITALS

A. The City desires to retain Contractor as an independent contractor to provide landscape maintenance services at the following City facility or Landscape and Lighting Maintenance District: [Maintenance District 6].

B. Contractor represents that it is fully qualified to perform such work by virtue of the training and experience of its personnel.

NOW, THEREFORE, the parties agree as follows:

1. Definitions. In addition to the terms defined above, the following definitions shall apply for purposes of this Agreement:

A. "Contract Administrator": Public Works Superintendent Bill Bowlus or a duly authorized designee.

B. "Contract Amount": [$ Sixty-Four Thousand Nine Hundred and Ninety-Nine Dollars and 92 cents ($ 64,999.92)] per year.

C. "Fee Schedule": the fee schedule set forth in the attached Exhibit B.

D. "Indemnitees": the City and its officers, employees, agents, and volunteers.

E. "Insurance Requirements": the insurance requirements set forth in the attached Exhibit C.

F. "Labor Code Requirements": the Labor Code requirements set forth in the attached Exhibit D.

G. "Liabilities": actual, alleged, or threatened causes of action, claims, costs, damages, demands, expenses (including fees of accountants, attorneys, and other professionals), judgments, liens, losses, penalties, and proceedings of any nature whatsoever.

H. "Services": the tasks set forth in the attached Exhibit A.

2. Services.

A. General Requirements. Contractor shall perform the Services in a timely, regular basis in accordance with applicable laws. Time is of the essence in the performance of this Agreement.

B. Labor Code Requirements. Contractor acknowledges that the Services are a "public work" within the scope of the Prevailing Wage Law (Labor Code Section 1720 et seq.). Contractor shall comply with the Labor Code Requirements.

C. Performance Standard. Contractor shall perform all work to the highest professional standards and in a manner reasonably satisfactory to the City. Contractor shall consult the Contract Administrator for any decisions that must be made by the City.

D. Customer Care. While fulfilling the terms of this Agreement, Contractor is performing as a representative of City and shall provide exceptional customer care. Any negative contact with City staff, residents, businesses, visitors, or other contractors shall be reported by Contractor immediately to the Contract Administrator.

E. Cooperation. In the event any claim is brought against the City relating to Contractor's performance of the Services, Contractor shall provide any reasonable assistance and cooperation that the City might require.

3. Term.

A. Base Term. The base term of this Agreement shall be just under four years, commencing on August 20, 2021 and expiring on June 30, 2025, unless extended or earlier terminated as provided herein.

B. Extension Options. The City shall have three options by which it may extend the term of this Agreement by one year at a time in its sole discretion. The one-year extension options may be exercised sequentially or concurrently. To exercise an extension option, the City shall give written notice to Contractor at least 30 days prior to the then-scheduled expiration date.

C. City Manager Authority. The City Manager may exercise extension options without prior City Council approval if both of the following conditions are satisfied: (i) the compensation to be paid Contractor for the applicable extension period has been approved and is included in a City Council-approved budget; and (ii) Contractor is not in breach of this Agreement.

D. Termination. If either party breaches this Agreement and fails to cure such breach within seven days of written notice, then the non-breaching party may immediately terminate this Agreement for cause. Additionally, the City may terminate this Agreement for convenience upon 60 days prior written notice to Contractor.

4. Compensation.

A. Full Satisfaction. The City shall compensate Contractor for performance of the Services, and Contractor agrees to accept as full satisfaction for such work, payment according to the Fee Schedule. In no event shall the compensation payable to Contractor under this Agreement exceed the Contract Amount.

B. Invoices. Contractor shall submit monthly invoices to the City for the Services. Each invoice shall itemize the work performed during the billing period and the amount due. Within 30 days of receipt of each invoice, the City shall pay all undisputed amounts on the invoice. City shall not withhold applicable taxes or other authorized deductions from the payments, and Contractor shall pay all required taxes on the payments.

C. CPI Adjustment: Subject to paragraph D below, starting July 1, 2022, and on an annual basis thereafter, the Fee Schedule shall be adjusted using the Consumer Price index for all Urban Consumers for the Los Angeles, Riverside, Anaheim Metropolitan Area (CPI-U) for the most recent twelve (12) months ending on December 31st prior to the July 1 rate adjustment based on data available from the United States Bureau of Labor Statistics.

D. Council Approval Requirement. The Fee Schedule shall not be revised during the term of this Agreement (including any extension periods) without prior approval by the City Council.

5. Independent Contractor Status. Contractor is, and shall at all times remain as to the City, an independent contractor. Contractor shall have no power to incur any debt, obligation, or liability on behalf of the City or to act otherwise on behalf of the City as an agent. Neither the City nor any of its officers, employees, agents, or volunteers shall have control over the conduct of Contractor except as set forth in this Agreement.

6. PERS Compliance. Contractor acknowledges that the City is a local agency member of California's Public Employees' Retirement System ("PERS"), and as such has certain pension reporting and contribution obligations to PERS on behalf of qualifying employees. Contractor agrees that, in providing its employees and any other personnel to the City to perform the Services, Contractor shall assure compliance with the Public Employees' Retirement Law (Government Code § 20000 et seq.) and the Public Employees' Pension Reform Act of 2013 (Government Code 7522 et seq.). Without limitation to the foregoing, Contractor shall assure compliance with regard to personnel who have active or inactive membership in PERS and to those who are retired annuitants and in performing this Agreement shall not assign or utilize any of its personnel in a manner that will cause the City to be in violation of the applicable retirement laws and regulations.

7. Indemnification.

A. Requirement. Contractor shall defend, hold harmless, and indemnify the Indemnitees from and against any Liabilities that arise out of the acts or omissions of Contractor or its subcontractors in connection with this Agreement.

B. Scope. Contractor's obligations under this section shall apply, without limitation, to Liabilities that partially involve active or passive negligence by the City. However, Contractor's obligations under this section shall not apply to Liabilities that arise from the sole negligence or willful misconduct of the City, as determined by final arbitration or court decision or by consensus of the parties.

C. Survival. Contractor's obligations under this section shall survive expiration or termination of this Agreement, and shall apply regardless of whether or not any insurance policies are determined to be applicable to the Liabilities.

8. Insurance. Without limiting Contractor's defense, hold harmless, and indemnification obligations under this Agreement, Contractor shall maintain policies of insurance as specified in the Insurance Requirements.

9. Accounting Records. During the term of this Agreement and for a period of three years after termination or expiration, Contractor shall maintain all accounting and financial records related to this Agreement in accordance with generally accepted accounting practices, and shall keep and make records available for inspection and audit by City representatives upon reasonable written notice.

10. Suspension. The Contract Administrator may suspend all or any part of the Services for the City's convenience or for work stoppages beyond the control of the parties. Written notice of a suspension shall be given to Contractor.

11. Notices. Any notices, invoices, or other documents related to this Agreement shall be deemed received on: (a) the day of delivery, if delivered by hand during the receiving party's regular business hours or by e-mail before or during the receiving party's regular business hours; (b) the business day after delivery, if delivered by e-mail after the receiving party's regular business hours; or (c) on the second business day following deposit in the United States mail, postage prepaid, to the addresses listed below, or to such other addresses as the parties may, from time to time, designate in writing.

City	Contractor
City of Brea	Nieves Landscape Inc.
545 N. Berry St.	1629 E. Edinger Ave.
Brea, CA 92821	Santa Ana, California 92705
Attn: Bill Bowlus	Attn: Greg Nieves, President
E-mail: BillB@ci.brea.ca.us	E-mail: gnieves@nieveslandscape.com

12. Assignability. Contractor shall not assign, transfer or subcontract any interest in this Agreement or the performance of any of its obligations without the City Manager's

prior written consent. This prohibition is not intended to preclude, and shall not be interpreted as precluding, Contractor from utilizing subcontractors identified in Contractor's proposal for the Services. Any attempt by Contractor to assign, transfer or subcontract any rights, duties or obligations in violation of this prohibition shall be void.

13. Litigation. In the event that either party shall commence legal action to enforce or interpret this Agreement, the prevailing party shall be entitled to recover its costs of suit including reasonable attorneys' fees. The venue for litigation shall be Orange County, California. The interpretation of this Agreement shall not be resolved by any rules of construction providing for interpretation against the party who causes the uncertainty to exist or against the party who drafted the disputed language.

14. Exhibits. The attached Exhibits A through D are incorporated into this Agreement by reference. In the event of any material discrepancy between the express provisions of this Agreement and the provisions of an Exhibit, the provisions of this Agreement shall prevail.

15. Incorporation of Mandatory Language. Each and every provision required by law to be inserted in this Agreement shall be deemed to be inserted and this Agreement shall be read and enforced as though such provision were included. If through mistake or otherwise any such provision is not inserted, or is not correctly inserted, then upon request of either party this Agreement shall promptly be amended to make such insertion or correction.

16. Entire Agreement. This Agreement (and the attached Exhibits) represents the entire and integrated contract between the parties regarding the Services. This Agreement supersedes all prior oral or written negotiations, representations and contracts related to the Services. This Agreement may not be amended, nor any provision or breach waived, except in a writing that is signed by the parties and that expressly refers to this Agreement.

[SIGNATURES ON FOLLOWING PAGE]

TO EXECUTE THIS AGREEMENT, the parties have caused their duly authorized representatives to sign below. Digital Signatures are acceptable if they conform to all requirements of Government Code Section 16.5.

[contractor name]

[use this signature block if contractor is a corporation]

☐ Chairperson ☒ President	☒ Secretary ☐ Asst. Secretary
☐ Vice President	☐ Chief Finance Officer ☐ Asst. Treasurer

[Pursuant to California Corporations Code Section 313, both signature lines must be executed unless the signatory holds at least one of the offices designated on each line.]

[use this signature block if contractor is a limited liability company]

Manager	Manager

[Pursuant to California Corporations Code Section 17703.01(d), both signature lines must be executed unless the articles of incorporation state that the firm is managed by only one manager.]

City of Brea

Steven Vargas, Mayor

Attest:

Lillian Harris-Neal, City Clerk

EXHIBIT A
Scope of Services

(attached)

EXHIBIT B
Fee Schedule

(attached)

EXHIBIT C
Insurance Requirements

1. Summary. Insurance coverages shall comply with requirements set forth herein.

   A. Rating Requirements. A /VII minimum.

   B. Commercial General Liability (CGL) + (PCO)
      a. $2,000,000 Minimum. Per occurrence.
      b. Additional Insured Endorsement. Required.
      c. Waiver of Subrogation. Required.

   C. Automobile Liability Insurance (ALI) (any auto)
      a. $2,000,000 Minimum. Per occurrence.
      b. Additional Insured Endorsement. Required.
      c. Waiver of Subrogation. Required.
      d. Exception. Not required if no vehicles used except for deliveries.

   D. Workers' Compensation (WC) and Employer's Liability (ELI)
      a. Statutory limits for Worker's Compensation.
      b. $1,000,000 Minimum. Per accident for bodily injury or disease.
      c. Additional Insured Endorsement. Not Required.
      d. Waiver of Subrogation. Required.
      e. Exception. Not required if no employees used for these Services.

2. General Requirements

   A. The City reserves the right to modify these requirements, including limits, based on the nature of the risk, prior experience, insurer, coverage, or other special circumstances. If the existing policies do not meet these requirements, Contractor agrees to amend, supplement or endorse the policies to do so.

   B. Without limiting Contractor's indemnity obligations hereunder, Contractor shall procure and maintain in full force and effect for the term of this Agreement, the following policies of insurance.

   C. For all insurance required by this Agreement, if a general aggregate limit applies, either the general aggregate limit shall apply separately to the Services or the general aggregate limit shall be twice the required occurrence limit.

D. If Contractor maintains broader coverage and/or higher limits than the minimums required herein, City requires and shall be entitled to the broader coverage and/or higher limits maintained by Contractor.

3. Coverages

A. Commercial General Liability (CGL)

a. CGL affords coverage at least as broad as Insurance Services Office "occurrence" form CG 00 01, including products and completed operations, property damage, bodily injury, and personal & advertising injury.

b. Limits shall be no less than $2,000,000 per occurrence.

c. Products-Completed Operations (PCO)
Contractor shall procure and submit to the City evidence of insurance for a period of at least ten (10) years from the time that all work under this Agreement is completed.

B. Automobile Liability Insurance (ALI)

a. ALI with coverage at least as broad as Insurance Services Office Form CA 0001 covering "Any Auto" (Symbol 1) for each accident for bodily injury and property damage with limit no less than $1,000,000 per occurrence.

b. If Contractor does not own any vehicles, Contractor may satisfy this requirement by providing the following:

i. A personal automobile liability policy for the contractor's own vehicle, if Contractor is a one-person operation; and

ii. A non-owned & hired auto liability endorsement to the commercial general liability policy if the contractor may lease, hire, rent, borrow, or use vehicles of others (e.g., employee-owned vehicles).

C. Workers' Compensation (WC)

a. Workers' Compensation as required by the State of California with statutory limits, and Employer's Liability Insurance with a limit of not less than $1,000,000 per accident for bodily injury or disease.

b. Self-Employment Affidavit or Declaration, signed under the penalty of perjury, if Contractor has no employees who will be performing work on behalf of the City, Contractor must provide:

i. A signed Self-Employment Affidavit Letter or a signed Declaration that Contractor is aware of the provisions of Section 3700 of the California Labor Code, which requires every employer to be insured against liability for workers' compensation or to undertake self-insurance in accordance with the provisions of that code, and that Contractor will

comply with such provisions before commencing the performance of the work of this contract; and

ii. A certification that Contractor does not employ any individual(s) in the course and scope of business operations.

4. Endorsements. Insurance policies shall not be in compliance if they include any limiting provision or endorsement that has not been submitted to the City for approval. The insurance policies shall contain or be endorsed to contain, the following provisions:

A. Commercial General Liability & Contractors Pollution Liability

a. Additional Insured. The City, its elected officials, officers, employees, volunteers, boards, and representatives shall be additional insureds with regard to liability and defense of suits or claims arising out of the work or operations performed by or on behalf of Contractor including materials, parts or equipment furnished in connection with such work or operations.

b. Additional Insured Endorsements shall not:

- Be limited to "Ongoing Operations".
- Exclude "Contractual Liability".
- Restrict coverage to the "Sole" liability of Contractor.
- Exclude "Third-Party-Over Actions".
- Contain any other exclusion contrary to this Agreement.

c. Additional Insured Endorsements shall be at least as broad as ISO Form(s) CG 20 10 11 85; or CG 2010 and CG 20 37.

d. Primary Insurance. This insurance shall be primary and any other insurance whether primary, excess, umbrella or contingent insurance, including deductible, or self-insurance available to the insureds added by endorsement shall be in excess of and shall not contribute with this insurance. Coverage shall be at least as broad as ISO CG 20 01 04 13.

B. Auto Liability

a. Additional Insured. The City, its elected officials, officers, employees, volunteers, boards, agents and representatives) shall be additional insureds with regard to liability and defense of suits or claims arising out of the work or operations performed by or on behalf of Contractor.

b. Primary Insurance. This insurance shall be primary and any other insurance whether primary, excess, umbrella or contingent insurance, including deductible, or self-insurance available to the insureds added by endorsement shall be in excess of and shall not contribute with this insurance.

C. Workers' Compensation. A waiver of subrogation stating that the insurer waives all rights of subrogation against the indemnified parties.

5. Miscellaneous.

A. Insurance Obligations of Contractor. The insurance obligations under this Agreement shall be: (1) all the Insurance coverage and/or limits carried by or available to Contractor; or (2) the minimum Insurance coverage requirements and/or limits shown in this Agreement; whichever is greater. Any insurance proceeds in excess of or broader than the minimum required coverage and/or minimum required limits, which are applicable to a given loss, shall be available to the City. No representation is made that the minimum insurance requirements of this agreement are sufficient to cover the obligations of the Contractor under this agreement.

B. Notice of Cancellation. Required insurance policies shall not be cancelled or the coverage reduced until a 30 day written notice of cancellation has been served upon City except 10 days shall be allowed for non-payment of premium.

C. Waiver of Subrogation. Required insurance coverages (except professional liability) shall not prohibit Contractor from waiving the right of subrogation prior to a loss. Contractor shall waive all rights of subrogation against the indemnified parties and policies shall contain or be endorsed to contain such a provision. This provision applies regardless of whether the City has received a waiver of subrogation endorsement from the insurer.

D. Evidence of Insurance. All policies, endorsements, certificates, and/or binders shall be subject to approval by the City as to form and content. These requirements are subject to amendment or waiver only if so approved in writing by the City. The City reserves the right to require complete, certified copies of all required insurance policies, including endorsements required by these specifications, at any time.

E. The certificates and endorsements for each insurance policy shall be signed by a person authorized by that insurer to bind coverage on its behalf. At least 15 days prior to the expiration of any such policy, evidence of insurance showing that such insurance coverage has been renewed or extended shall be filed with City. If such coverage is cancelled or reduced, Contractor shall, within 10 days after receipt of written notice of such cancellation or reduction of coverage, file with the City evidence of insurance showing that the required insurance has been reinstated or has been provided through another insurance company or companies.

F. Deductible or Self-Insured Retention. Any deductible or self-insured retention must be approved in writing by the City and shall protect the

indemnified parties in the same manner and to the same extent as they would have been protected had the policy or policies not contained a deductible or self-insured retention. The City may require Contractor to purchase coverage with a lower retention or provide proof of ability to pay losses and related investigations, claim administration and defense expenses within the retention.

G. Contractual Liability. The coverage provided shall apply to the obligations assumed by Contractor under the indemnity provisions of this Agreement.

H. Failure to Maintain Coverage. Contractor agrees to suspend and cease all operations hereunder during such period of time as the required insurance coverage is not in effect and evidence of insurance has not been furnished to the City. The City shall have the right to withhold any payment due until Contractor has fully complied with the insurance provisions of this Agreement.

I. In the event that Contractor's operations are suspended for failure to maintain required insurance coverage, Contractor shall not be entitled to an extension of time for completion of the Work because of production lost during suspension.

J. Acceptability of Insurers. Each such policy shall be from a company or companies with a current A.M. Best's rating of no less than A:VII and authorized to do business in the State of California, or otherwise allowed to place insurance through surplus line brokers under applicable provisions of the California Insurance Code or any federal law. Any other rating must be approved in writing by the City.

K. Claims Made Policies. If coverage, including coverage for Construction Defect claims, is written on a claims-made basis, the retroactive date on such insurance and all subsequent insurance shall coincide or precede the effective date of this Agreement and an extended reporting period shall be provided for a period of at least five years from termination or expiration of this Agreement.

L. Insurance for Subcontractors. Contractor shall be responsible for causing Subcontractors to purchase the same types and limits of insurance in compliance with the terms of this Agreement, including adding the City as an Additional Insured, providing Primary and Non-Contributory coverage and Waiver of Subrogation to the Subcontractor's policies. The Commercial General Liability Additional Insured Endorsement shall be on a form at least as broad as CG 20 38 04 13.

EXHIBIT D
Labor Code Requirements

1. Pursuant to Labor Code Section 1773.2, copies of the prevailing rate of per diem wages for each craft, classification, or type of worker needed to perform the Services are on file at City Hall and will be made available to any interested party on request. By initiating any Work, Contractor acknowledges receipt of a copy of the DIR determination of such prevailing rate of per diem wages, and Contractor shall post such rates at each job site covered by these Contract Documents.

2. Contractor shall comply with and be bound by the provisions of Labor Code Sections 1774 and 1775 concerning the payment of prevailing rates of wages to workers and the penalties for failure to pay prevailing wages. Contractor shall, as a penalty paid to the City, forfeit $200 for each calendar day, or portion thereof, for each worker paid less than the prevailing rates as determined by the DIR for the work or craft in which the worker is employed for any public work done pursuant to these Contract Documents by Contractor or by any subcontractor.

3. Contractor shall comply with and be bound by the provisions of Labor Code Section 1776, which requires Contractor and each subcontractor to (1) keep accurate payroll records and verify such records in writing under penalty of perjury, as specified in Section 1776, (2) certify and make such payroll records available for inspection as provided by Section 1776, and (3) inform the City of the location of the records. Contractor has 10 days in which to comply subsequent to receipt of a written notice requesting these records, or as a penalty to the City, Contractor shall forfeit $100 for each day, or portion thereof, for each worker, until strict compliance is effectuated. Upon the request of the Division of Labor Standards Enforcement, these penalties shall be withheld from progress payments then due.

4. Contractor and each subcontractor shall comply with and be bound by the provisions of Labor Code Section 1771.4(a)(3), which requires that each contractor and each subcontractor shall furnish the records specified in Section 1776 directly to the Labor Commissioner at least monthly, in a format prescribed by the Labor Commissioner.

5. Contractor acknowledges that eight hours labor constitutes a legal day's work. Contractor shall comply with and be bound by Labor Code Section 1810. Contractor shall comply with and be bound by the provisions of Labor Code Section 1813 concerning penalties for workers who work excess hours. Contractor shall, as a penalty paid to the City, forfeit $25 for each worker employed in the performance of the Services by Contractor or by any subcontractor for each calendar day during which such worker is required or permitted to work more than eight hours in any one calendar day and 40 hours in

any one calendar week in violation of the provisions of Division 2, Part 7, Chapter 1, Article 3 of the Labor Code. Pursuant to Labor Code Section 1815, work performed by employees of the Contractor in excess of eight hours per day, and 40 hours during any one week shall be permitted upon public work upon compensation for all hours worked in excess of eight hours per day at not less than 1.5 times the basic rate of pay.

6. Contractor shall comply with and be bound by the provisions of Labor Code Sections 1777.5, 1777.6 and 1777.7 and California Code of Regulations Title 8, Section 200 et seq. concerning the employment of apprentices on public works projects. Contractor shall be responsible for compliance with these Sections for all apprenticeable occupations. Before commencing the Services, Contractor shall provide the City with a copy of the information submitted to any applicable apprenticeship program. Within 60 days after concluding work, Contractor and each of its subcontractors shall submit to the City a verified statement of the journeyman and apprentice hours performed under this Agreement.

7. Contractor shall not perform work with any subcontractor that has been debarred or suspended pursuant to California Labor Code Section 1777.1 or any other federal or state law providing for the debarment of contractors from public works. Contractor and subcontractors shall not be debarred or suspended throughout the duration of this Agreement pursuant to Labor Code Section 1777.1 or any other federal or state law providing for the debarment of contractors from public works. If Contractor or any subcontractor becomes debarred or suspended during the duration of this Agreement, Contractor shall immediately notify the City.

8. In accordance with Labor Code Sections 1725.5 and 1771.1, no contractor or subcontractor shall be qualified to bid on, be listed in a bid, subject to the requirements of Section 4104 of the Public Contract Code, or engage in the performance of any contract for public work, unless currently registered and qualified to perform public work pursuant to Section 1725.5.

9. The Services are subject to compliance monitoring and enforcement by the DIR. Contractor shall post job site notices, as prescribed by regulation.

10. Labor Code Sections 1860 and 3700 provide that every contractor will be required to secure the payment of compensation to its employees. In accordance with the provisions of Labor Code Section 1861, by signing this Agreement, Contractor certifies as follows:

> "I am aware of the provisions of Section 3700 of the Labor Code which require every employer to be insured against liability for workers' compensation or to undertake self-insurance in accordance with the provisions of that code, and I will comply with such provisions before commencing the performance of the Work of this contract."

LANDSCAPE MAINTENANCE AGREEMENT

THIS LANDSCAPE MAINTENANCE AGREEMENT ("Agreement") is dated [August 17, 2021 for reference purposes and is executed by the City of Brea ("City"), a California municipal corporation, and [Nieves Landscape Inc.] ("Contractor"), a [California] [C Corporation]. Contractor's CSLB license number is [674709]. Contractor's DIR registration number is [1000012716].

RECITALS

A. The City desires to retain Contractor as an independent contractor to provide landscape maintenance services at the following City facility or Landscape and Lighting Maintenance District: [Maintenance District 7].

B. Contractor represents that it is fully qualified to perform such work by virtue of the training and experience of its personnel.

NOW, THEREFORE, the parties agree as follows:

1. Definitions. In addition to the terms defined above, the following definitions shall apply for purposes of this Agreement:

A. "Contract Administrator": Public Works Superintendent Bill Bowlus or a duly authorized designee.

B. "Contract Amount": [$ Thirteen Thousand Four Hundred and Ten Dollars ($ 13,410.00)] per year.

C. "Fee Schedule": the fee schedule set forth in the attached Exhibit B.

D. "Indemnitees": the City and its officers, employees, agents, and volunteers.

E. "Insurance Requirements": the insurance requirements set forth in the attached Exhibit C.

F. "Labor Code Requirements": the Labor Code requirements set forth in the attached Exhibit D.

G. "Liabilities": actual, alleged, or threatened causes of action, claims, costs, damages, demands, expenses (including fees of accountants, attorneys, and other professionals), judgments, liens, losses, penalties, and proceedings of any nature whatsoever.

H. "Services": the tasks set forth in the attached Exhibit A.

2. Services.

A. General Requirements. Contractor shall perform the Services in a timely, regular basis in accordance with applicable laws. Time is of the essence in the performance of this Agreement.

B. Labor Code Requirements. Contractor acknowledges that the Services are a "public work" within the scope of the Prevailing Wage Law (Labor Code Section 1720 et seq.). Contractor shall comply with the Labor Code Requirements.

C. Performance Standard. Contractor shall perform all work to the highest professional standards and in a manner reasonably satisfactory to the City. Contractor shall consult the Contract Administrator for any decisions that must be made by the City.

D. Customer Care. While fulfilling the terms of this Agreement, Contractor is performing as a representative of City and shall provide exceptional customer care. Any negative contact with City staff, residents, businesses, visitors, or other contractors shall be reported by Contractor immediately to the Contract Administrator.

E. Cooperation. In the event any claim is brought against the City relating to Contractor's performance of the Services, Contractor shall provide any reasonable assistance and cooperation that the City might require.

3. Term.

A. Base Term. The base term of this Agreement shall be just under four years, commencing on August 20, 2021 and expiring on June 30, 2025, unless extended or earlier terminated as provided herein.

B. Extension Options. The City shall have three options by which it may extend the term of this Agreement by one year at a time in its sole discretion. The one-year extension options may be exercised sequentially or concurrently. To exercise an extension option, the City shall give written notice to Contractor at least 30 days prior to the then-scheduled expiration date.

C. City Manager Authority. The City Manager may exercise extension options without prior City Council approval if both of the following conditions are satisfied: (i) the compensation to be paid Contractor for the applicable extension period has been approved and is included in a City Council-approved budget; and (ii) Contractor is not in breach of this Agreement.

D. Termination. If either party breaches this Agreement and fails to cure such breach within seven days of written notice, then the non-breaching party may immediately terminate this Agreement for cause. Additionally, the City may terminate this Agreement for convenience upon 60 days prior written notice to Contractor.

4. Compensation.

A. Full Satisfaction. The City shall compensate Contractor for performance of the Services, and Contractor agrees to accept as full satisfaction for such work, payment according to the Fee Schedule. In no event shall the compensation payable to Contractor under this Agreement exceed the Contract Amount.

B. Invoices. Contractor shall submit monthly invoices to the City for the Services. Each invoice shall itemize the work performed during the billing period and the amount due. Within 30 days of receipt of each invoice, the City shall pay all undisputed amounts on the invoice. City shall not withhold applicable taxes or other authorized deductions from the payments, and Contractor shall pay all required taxes on the payments.

C. CPI Adjustment: Subject to paragraph D below, starting July 1, 2022, and on an annual basis thereafter, the Fee Schedule shall be adjusted using the Consumer Price index for all Urban Consumers for the Los Angeles, Riverside, Anaheim Metropolitan Area (CPI-U) for the most recent twelve (12) months ending on December 31st prior to the July 1 rate adjustment based on data available from the United States Bureau of Labor Statistics.

D. Council Approval Requirement. The Fee Schedule shall not be revised during the term of this Agreement (including any extension periods) without prior approval by the City Council.

5. Independent Contractor Status. Contractor is, and shall at all times remain as to the City, an independent contractor. Contractor shall have no power to incur any debt, obligation, or liability on behalf of the City or to act otherwise on behalf of the City as an agent. Neither the City nor any of its officers, employees, agents, or volunteers shall have control over the conduct of Contractor except as set forth in this Agreement.

6. PERS Compliance. Contractor acknowledges that the City is a local agency member of California's Public Employees' Retirement System ("PERS"), and as such has certain pension reporting and contribution obligations to PERS on behalf of qualifying employees. Contractor agrees that, in providing its employees and any other personnel to the City to perform the Services, Contractor shall assure compliance with the Public Employees' Retirement Law (Government Code § 20000 et seq.) and the Public Employees' Pension Reform Act of 2013 (Government Code 7522 et seq.). Without limitation to the foregoing, Contractor shall assure compliance with regard to personnel who have active or inactive membership in PERS and to those who are retired annuitants and in performing this Agreement shall not assign or utilize any of its personnel in a manner that will cause the City to be in violation of the applicable retirement laws and regulations.

7. Indemnification.

A. Requirement. Contractor shall defend, hold harmless, and indemnify the Indemnitees from and against any Liabilities that arise out of the acts or omissions of Contractor or its subcontractors in connection with this Agreement.

B. Scope. Contractor's obligations under this section shall apply, without limitation, to Liabilities that partially involve active or passive negligence by the City. However, Contractor's obligations under this section shall not apply to Liabilities that arise from the sole negligence or willful misconduct of the City, as determined by final arbitration or court decision or by consensus of the parties.

C. Survival. Contractor's obligations under this section shall survive expiration or termination of this Agreement, and shall apply regardless of whether or not any insurance policies are determined to be applicable to the Liabilities.

8. Insurance. Without limiting Contractor's defense, hold harmless, and indemnification obligations under this Agreement, Contractor shall maintain policies of insurance as specified in the Insurance Requirements.

9. Accounting Records. During the term of this Agreement and for a period of three years after termination or expiration, Contractor shall maintain all accounting and financial records related to this Agreement in accordance with generally accepted accounting practices, and shall keep and make records available for inspection and audit by City representatives upon reasonable written notice.

10. Suspension. The Contract Administrator may suspend all or any part of the Services for the City's convenience or for work stoppages beyond the control of the parties. Written notice of a suspension shall be given to Contractor.

11. Notices. Any notices, invoices, or other documents related to this Agreement shall be deemed received on: (a) the day of delivery, if delivered by hand during the receiving party's regular business hours or by e-mail before or during the receiving party's regular business hours; (b) the business day after delivery, if delivered by e-mail after the receiving party's regular business hours; or (c) on the second business day following deposit in the United States mail, postage prepaid, to the addresses listed below, or to such other addresses as the parties may, from time to time, designate in writing.

City
City of Brea
545 N. Berry St.
Brea, CA 92821
Attn: Bill Bowlus
E-mail: BillB@ci.brea.ca.us

Contractor
Nieves Landscape Inc.
1629 E. Edinger Ave.
Santa Ana, California 92705
Attn: Greg Nieves, President
E-mail: gnieves@nieveslandscape.com

12. Assignability. Contractor shall not assign, transfer or subcontract any interest in this Agreement or the performance of any of its obligations without the City Manager's

prior written consent. This prohibition is not intended to preclude, and shall not be interpreted as precluding, Contractor from utilizing subcontractors identified in Contractor's proposal for the Services. Any attempt by Contractor to assign, transfer or subcontract any rights, duties or obligations in violation of this prohibition shall be void.

13. Litigation. In the event that either party shall commence legal action to enforce or interpret this Agreement, the prevailing party shall be entitled to recover its costs of suit including reasonable attorneys' fees. The venue for litigation shall be Orange County, California. The interpretation of this Agreement shall not be resolved by any rules of construction providing for interpretation against the party who causes the uncertainty to exist or against the party who drafted the disputed language.

14. Exhibits. The attached Exhibits A through D are incorporated into this Agreement by reference. In the event of any material discrepancy between the express provisions of this Agreement and the provisions of an Exhibit, the provisions of this Agreement shall prevail.

15. Incorporation of Mandatory Language. Each and every provision required by law to be inserted in this Agreement shall be deemed to be inserted and this Agreement shall be read and enforced as though such provision were included. If through mistake or otherwise any such provision is not inserted, or is not correctly inserted, then upon request of either party this Agreement shall promptly be amended to make such insertion or correction.

16. Entire Agreement. This Agreement (and the attached Exhibits) represents the entire and integrated contract between the parties regarding the Services. This Agreement supersedes all prior oral or written negotiations, representations and contracts related to the Services. This Agreement may not be amended, nor any provision or breach waived, except in a writing that is signed by the parties and that expressly refers to this Agreement.

[SIGNATURES ON FOLLOWING PAGE]

TO EXECUTE THIS AGREEMENT, the parties have caused their duly authorized representatives to sign below. Digital Signatures are acceptable if they conform to all requirements of Government Code Section 16.5.

[contractor name]

[use this signature block if contractor is a corporation]

_____	_____
□ Chairperson ☒ President	☒ Secretary □ Asst. Secretary
□ Vice President	□ Chief Finance Officer □ Asst. Treasurer

[Pursuant to California Corporations Code Section 313, both signature lines must be executed unless the signatory holds at least one of the offices designated on each line.]

[use this signature block if contractor is a limited liability company]

_____	_____
Manager	Manager

[Pursuant to California Corporations Code Section 17703.01(d), both signature lines must be executed unless the articles of incorporation state that the firm is managed by only one manager.]

City of Brea

_____

Steven Vargas, Mayor

Attest:

_____

Lillian Harris-Neal, City Clerk

EXHIBIT A
Scope of Services

(attached)

EXHIBIT B
Fee Schedule

(attached)

EXHIBIT C
Insurance Requirements

1. Summary. Insurance coverages shall comply with requirements set forth herein.

   A. Rating Requirements. A /VII minimum.

   B. Commercial General Liability (CGL) + (PCO)
      a. $2,000,000 Minimum. Per occurrence.
      b. Additional Insured Endorsement. Required.
      c. Waiver of Subrogation. Required.

   C. Automobile Liability Insurance (ALI) (any auto)
      a. $2,000,000 Minimum. Per occurrence.
      b. Additional Insured Endorsement. Required.
      c. Waiver of Subrogation. Required.
      d. Exception. Not required if no vehicles used except for deliveries.

   D. Workers' Compensation (WC) and Employer's Liability (ELI)
      a. Statutory limits for Worker's Compensation.
      b. $1,000,000 Minimum. Per accident for bodily injury or disease.
      c. Additional Insured Endorsement. Not Required.
      d. Waiver of Subrogation. Required.
      e. Exception. Not required if no employees used for these Services.

2. General Requirements

   A. The City reserves the right to modify these requirements, including limits, based on the nature of the risk, prior experience, insurer, coverage, or other special circumstances. If the existing policies do not meet these requirements, Contractor agrees to amend, supplement or endorse the policies to do so.

   B. Without limiting Contractor's indemnity obligations hereunder, Contractor shall procure and maintain in full force and effect for the term of this Agreement, the following policies of insurance.

   C. For all insurance required by this Agreement, if a general aggregate limit applies, either the general aggregate limit shall apply separately to the Services or the general aggregate limit shall be twice the required occurrence limit.

D. If Contractor maintains broader coverage and/or higher limits than the minimums required herein, City requires and shall be entitled to the broader coverage and/or higher limits maintained by Contractor.

3. Coverages

A. Commercial General Liability (CGL)

a. CGL affords coverage at least as broad as Insurance Services Office "occurrence" form CG 00 01, including products and completed operations, property damage, bodily injury, and personal & advertising injury.

b. Limits shall be no less than $2,000,000 per occurrence.

c. Products-Completed Operations (PCO)
Contractor shall procure and submit to the City evidence of insurance for a period of at least ten (10) years from the time that all work under this Agreement is completed.

B. Automobile Liability Insurance (ALI)

a. ALI with coverage at least as broad as Insurance Services Office Form CA 0001 covering "Any Auto" (Symbol 1) for each accident for bodily injury and property damage with limit no less than $1,000,000 per occurrence.

b. If Contractor does not own any vehicles, Contractor may satisfy this requirement by providing the following:

i. A personal automobile liability policy for the contractor's own vehicle, if Contractor is a one-person operation; and

ii. A non-owned & hired auto liability endorsement to the commercial general liability policy if the contractor may lease, hire, rent, borrow, or use vehicles of others (e.g., employee-owned vehicles).

C. Workers' Compensation (WC)

a. Workers' Compensation as required by the State of California with statutory limits, and Employer's Liability Insurance with a limit of not less than $1,000,000 per accident for bodily injury or disease.

b. Self-Employment Affidavit or Declaration, signed under the penalty of perjury, if Contractor has no employees who will be performing work on behalf of the City, Contractor must provide:

i. A signed Self-Employment Affidavit Letter or a signed Declaration that Contractor is aware of the provisions of Section 3700 of the California Labor Code, which requires every employer to be insured against liability for workers' compensation or to undertake self-insurance in accordance with the provisions of that code, and that Contractor will

comply with such provisions before commencing the performance of the work of this contract; and

ii. A certification that Contractor does not employ any individual(s) in the course and scope of business operations.

4. Endorsements. Insurance policies shall not be in compliance if they include any limiting provision or endorsement that has not been submitted to the City for approval. The insurance policies shall contain or be endorsed to contain, the following provisions:

A. Commercial General Liability & Contractors Pollution Liability

a. Additional Insured. The City, its elected officials, officers, employees, volunteers, boards, and representatives shall be additional insureds with regard to liability and defense of suits or claims arising out of the work or operations performed by or on behalf of Contractor including materials, parts or equipment furnished in connection with such work or operations.

b. Additional Insured Endorsements shall not:

- Be limited to "Ongoing Operations".
- Exclude "Contractual Liability".
- Restrict coverage to the "Sole" liability of Contractor.
- Exclude "Third-Party-Over Actions".
- Contain any other exclusion contrary to this Agreement.

c. Additional Insured Endorsements shall be at least as broad as ISO Form(s) CG 20 10 11 85; or CG 2010 and CG 20 37.

d. Primary Insurance. This insurance shall be primary and any other insurance whether primary, excess, umbrella or contingent insurance, including deductible, or self-insurance available to the insureds added by endorsement shall be in excess of and shall not contribute with this insurance. Coverage shall be at least as broad as ISO CG 20 01 04 13.

B. Auto Liability

a. Additional Insured. The City, its elected officials, officers, employees, volunteers, boards, agents and representatives) shall be additional insureds with regard to liability and defense of suits or claims arising out of the work or operations performed by or on behalf of Contractor.

b. Primary Insurance. This insurance shall be primary and any other insurance whether primary, excess, umbrella or contingent insurance, including deductible, or self-insurance available to the insureds added by endorsement shall be in excess of and shall not contribute with this insurance.

C. Workers' Compensation. A waiver of subrogation stating that the insurer waives all rights of subrogation against the indemnified parties.

5. Miscellaneous.

A. Insurance Obligations of Contractor. The insurance obligations under this Agreement shall be: (1) all the Insurance coverage and/or limits carried by or available to Contractor; or (2) the minimum Insurance coverage requirements and/or limits shown in this Agreement; whichever is greater. Any insurance proceeds in excess of or broader than the minimum required coverage and/or minimum required limits, which are applicable to a given loss, shall be available to the City. No representation is made that the minimum insurance requirements of this agreement are sufficient to cover the obligations of the Contractor under this agreement.

B. Notice of Cancellation. Required insurance policies shall not be cancelled or the coverage reduced until a 30 day written notice of cancellation has been served upon City except 10 days shall be allowed for non-payment of premium.

C. Waiver of Subrogation. Required insurance coverages (except professional liability) shall not prohibit Contractor from waiving the right of subrogation prior to a loss. Contractor shall waive all rights of subrogation against the indemnified parties and policies shall contain or be endorsed to contain such a provision. This provision applies regardless of whether the City has received a waiver of subrogation endorsement from the insurer.

D. Evidence of Insurance. All policies, endorsements, certificates, and/or binders shall be subject to approval by the City as to form and content. These requirements are subject to amendment or waiver only if so approved in writing by the City. The City reserves the right to require complete, certified copies of all required insurance policies, including endorsements required by these specifications, at any time.

E. The certificates and endorsements for each insurance policy shall be signed by a person authorized by that insurer to bind coverage on its behalf. At least 15 days prior to the expiration of any such policy, evidence of insurance showing that such insurance coverage has been renewed or extended shall be filed with City. If such coverage is cancelled or reduced, Contractor shall, within 10 days after receipt of written notice of such cancellation or reduction of coverage, file with the City evidence of insurance showing that the required insurance has been reinstated or has been provided through another insurance company or companies.

F. Deductible or Self-Insured Retention. Any deductible or self-insured retention must be approved in writing by the City and shall protect the

indemnified parties in the same manner and to the same extent as they would have been protected had the policy or policies not contained a deductible or self-insured retention. The City may require Contractor to purchase coverage with a lower retention or provide proof of ability to pay losses and related investigations, claim administration and defense expenses within the retention.

G. Contractual Liability. The coverage provided shall apply to the obligations assumed by Contractor under the indemnity provisions of this Agreement.

H. Failure to Maintain Coverage. Contractor agrees to suspend and cease all operations hereunder during such period of time as the required insurance coverage is not in effect and evidence of insurance has not been furnished to the City. The City shall have the right to withhold any payment due until Contractor has fully complied with the insurance provisions of this Agreement.

I. In the event that Contractor's operations are suspended for failure to maintain required insurance coverage, Contractor shall not be entitled to an extension of time for completion of the Work because of production lost during suspension.

J. Acceptability of Insurers. Each such policy shall be from a company or companies with a current A.M. Best's rating of no less than A:VII and authorized to do business in the State of California, or otherwise allowed to place insurance through surplus line brokers under applicable provisions of the California Insurance Code or any federal law. Any other rating must be approved in writing by the City.

K. Claims Made Policies. If coverage, including coverage for Construction Defect claims, is written on a claims-made basis, the retroactive date on such insurance and all subsequent insurance shall coincide or precede the effective date of this Agreement and an extended reporting period shall be provided for a period of at least five years from termination or expiration of this Agreement.

L. Insurance for Subcontractors. Contractor shall be responsible for causing Subcontractors to purchase the same types and limits of insurance in compliance with the terms of this Agreement, including adding the City as an Additional Insured, providing Primary and Non-Contributory coverage and Waiver of Subrogation to the Subcontractor's policies. The Commercial General Liability Additional Insured Endorsement shall be on a form at least as broad as CG 20 38 04 13.

EXHIBIT D
Labor Code Requirements

1. Pursuant to Labor Code Section 1773.2, copies of the prevailing rate of per diem wages for each craft, classification, or type of worker needed to perform the Services are on file at City Hall and will be made available to any interested party on request. By initiating any Work, Contractor acknowledges receipt of a copy of the DIR determination of such prevailing rate of per diem wages, and Contractor shall post such rates at each job site covered by these Contract Documents.

2. Contractor shall comply with and be bound by the provisions of Labor Code Sections 1774 and 1775 concerning the payment of prevailing rates of wages to workers and the penalties for failure to pay prevailing wages. Contractor shall, as a penalty paid to the City, forfeit $200 for each calendar day, or portion thereof, for each worker paid less than the prevailing rates as determined by the DIR for the work or craft in which the worker is employed for any public work done pursuant to these Contract Documents by Contractor or by any subcontractor.

3. Contractor shall comply with and be bound by the provisions of Labor Code Section 1776, which requires Contractor and each subcontractor to (1) keep accurate payroll records and verify such records in writing under penalty of perjury, as specified in Section 1776, (2) certify and make such payroll records available for inspection as provided by Section 1776, and (3) inform the City of the location of the records. Contractor has 10 days in which to comply subsequent to receipt of a written notice requesting these records, or as a penalty to the City, Contractor shall forfeit $100 for each day, or portion thereof, for each worker, until strict compliance is effectuated. Upon the request of the Division of Labor Standards Enforcement, these penalties shall be withheld from progress payments then due.

4. Contractor and each subcontractor shall comply with and be bound by the provisions of Labor Code Section 1771.4(a)(3), which requires that each contractor and each subcontractor shall furnish the records specified in Section 1776 directly to the Labor Commissioner at least monthly, in a format prescribed by the Labor Commissioner.

5. Contractor acknowledges that eight hours labor constitutes a legal day's work. Contractor shall comply with and be bound by Labor Code Section 1810. Contractor shall comply with and be bound by the provisions of Labor Code Section 1813 concerning penalties for workers who work excess hours. Contractor shall, as a penalty paid to the City, forfeit $25 for each worker employed in the performance of the Services by Contractor or by any subcontractor for each calendar day during which such worker is required or permitted to work more than eight hours in any one calendar day and 40 hours in

any one calendar week in violation of the provisions of Division 2, Part 7, Chapter 1, Article 3 of the Labor Code. Pursuant to Labor Code Section 1815, work performed by employees of the Contractor in excess of eight hours per day, and 40 hours during any one week shall be permitted upon public work upon compensation for all hours worked in excess of eight hours per day at not less than 1.5 times the basic rate of pay.

6. Contractor shall comply with and be bound by the provisions of Labor Code Sections 1777.5, 1777.6 and 1777.7 and California Code of Regulations Title 8, Section 200 et seq. concerning the employment of apprentices on public works projects. Contractor shall be responsible for compliance with these Sections for all apprenticeable occupations. Before commencing the Services, Contractor shall provide the City with a copy of the information submitted to any applicable apprenticeship program. Within 60 days after concluding work, Contractor and each of its subcontractors shall submit to the City a verified statement of the journeyman and apprentice hours performed under this Agreement.

7. Contractor shall not perform work with any subcontractor that has been debarred or suspended pursuant to California Labor Code Section 1777.1 or any other federal or state law providing for the debarment of contractors from public works. Contractor and subcontractors shall not be debarred or suspended throughout the duration of this Agreement pursuant to Labor Code Section 1777.1 or any other federal or state law providing for the debarment of contractors from public works. If Contractor or any subcontractor becomes debarred or suspended during the duration of this Agreement, Contractor shall immediately notify the City.

8. In accordance with Labor Code Sections 1725.5 and 1771.1, no contractor or subcontractor shall be qualified to bid on, be listed in a bid, subject to the requirements of Section 4104 of the Public Contract Code, or engage in the performance of any contract for public work, unless currently registered and qualified to perform public work pursuant to Section 1725.5.

9. The Services are subject to compliance monitoring and enforcement by the DIR. Contractor shall post job site notices, as prescribed by regulation.

10. Labor Code Sections 1860 and 3700 provide that every contractor will be required to secure the payment of compensation to its employees. In accordance with the provisions of Labor Code Section 1861, by signing this Agreement, Contractor certifies as follows:

> "I am aware of the provisions of Section 3700 of the Labor Code which require every employer to be insured against liability for workers' compensation or to undertake self-insurance in accordance with the provisions of that code, and I will comply with such provisions before commencing the performance of the Work of this contract."

City of Brea

June 23, 2021

Mr. Shinsuke Yamamoto, President
S. C. YAMAMOTO, INC.
2031 Emery Avenue
La Habra, CA 90631

RE: Landscape Contract Deficiencies - Notice to Cure

This letter is to inform you of landscape contract deficiencies that continue to occur since the contract started.

The City is experiencing deficiencies in all of your Contracts as discussed with you at our meeting on June 17, 2021. Your mowing and maintenance operations continue to provide below standard results and insufficient staffing levels per your proposals.

The mowing services cut the turf unevenly, areas are missed and scalped. Edging and string trimmer operations are not thorough or consistent. Maintenance operations are not consistent for trimming, low productivity and mechanical or chemical weed abatement.

The City is giving you a formal 30-day Notice to Cure as of yesterday, June 22, 2021. July 21, 2021 is the end of the cure period. If the deficiencies have not been corrected and maintained consistently the City will proceed with a 30-day Notice to Terminate selected or all of your contracts.

If you have any questions, call me at (714) 990-7694.

PUBLIC WORKS DEPARTMENT

Bill Bowlus
Public Works Superintendent

Cc: Tony Olmos, P.E., Director of Public Works
S. C. Yamamoto MD3 File

City Council | Steven Vargas, *Mayor* | Cecilia Hupp, *Mayor Pro Tem* | Christine Marick, *Council Member* | Glenn Parker, *Council Member* | Marty Simonoff, *Council Member*

Civic & Cultural Center • 1 Civic Center Circle • Brea, California 92821-5732 • 714/990-7600 • FAX 714/990-2258 • www.cityofbrea.net

Recycled Cert no. SCS-COC-001182 © 1996 FSC

City of Brea

July 21, 2021

Mr. Shinsuke Yamamoto, President
S. C. YAMAMOTO, INC.
2031 Emery Avenue
La Habra, CA 90631

RE: Landscape Contract Deficiencies - Notice of Termination

This letter is to inform you of your failure to correct the landscape contract deficiencies as identified in the Notice to Cure letter dated June 22, 2021.

Your contracts with the City in the following areas will terminate on August 20, 2021, and services will be prorated for the month of August.

- Parks Mowing
- Landscape Maintenance at City medians, parkways, greenbelts and entry markers
- Landscape Maintenance in Maintenance District #1
- Landscape Maintenance in Maintenance District #3
- Landscape Maintenance in Maintenance District #6
- Landscape Maintenance in Maintenance District #7

If you have any questions, please call me at (714) 990-7694.

PUBLIC WORKS DEPARTMENT

Bill Bowlus
Public Works Superintendent

Cc: Tony Olmos, P.E., Director of Public Works
S. C. Yamamoto MD3 File

City Council **Steven Vargas** *Mayor* **Cecilia Hupp** *Mayor Pro Tem* **Christine Marick** *Council Member* **Glenn Parker** *Council Member* **Marty Simonoff** *Council Member*

Civic & Cultural Center • 1 Civic Center Circle • Brea, California 92821-5732 • 714/990-7600 • FAX 714/990-2258 • www.cityofbrea.net

Recycled Cert no. SCS-COC-001182 ©1996 FSC

FEE SCHEDULE #3: BREA - MOWING AT CITY PARKS (BREA)

Bidder: Nieves Landscape, Inc.

Revised as of 7/15/2021

Item	Park Location to Mow and Edge	Quantity in Square Feet	Unit Price (each mow)	Total (Unit x 42)
1.	Country Hills Park 182 N Associated Rd.	246,427	$336.00	$14,112.00
2.	City Hall Park 201 S Brea Blvd.	114,244	$156.00	$6,552.00
3.	Arovista Park (phase 1, fields/slope,grove) Imperial Hwy at Berry Street	288,298	$393.00	$16,506.00
4.	Arovista Park (phase 2, playground) 501 Sievers Ave.	123,536	$168.00	$7,056.00
5.	Founders Park 777 Skyler Way	66,400	$91.00	$3,822.00
6.	Greenbriar Park Greenbriar and Associated	166,700	$227.00	$9,534.00
7.	Jr. High Park 432 N Country Lane	262,142	$357.00	$14,994.00
8.	Lagos de Moreno Park 322 E Birch	23,300	$32.00	$1,344.00
9.	Olinda Ranch Park 4001 Carbon Canyon Rd.	220,970	$301.00	$12,642.00
10.	Olinda Oil Museum and Trail 4025 Santa Fe Rd.	10,750	$16.00	$672.00
11.	Tamarack Park 500 N Tamarack	178,470	$243.00	$10,206.00
12.	Wildcatters Park 3301 E Santa Fe	95,503	$130.00	$5,460.00
13.	Woodcrest Park Woodcrest at Cedarcrest	18,480	$25.00	$1,050.00

Total Schedule in words: One hundred three thousand nine hundred fifty dollars and no/ cents
Total Schedule in figures: $ 103,950.00

* Bidder declares that he or she has read and understands the scope of services

_____

Contractor Staff Information

Number of days per week: 4

Staff per day: 3

Total staff hours per day: 24

Revised as of 7/15/2021

FEE SCHEDULE #5: BREA – MOWING AND LANDSCAPE MAINTENANCE AT CITY MEDIANS, GREENBELTS, ENTRY MARKERS AND PARKWAYS
(No irrigation system maintenance)

Bidder: Nieves Landscape, Inc.

Item	Location	Turf Square Footage	Planter Square Footage	Unit Price (weekly visit with 42 mows/year)	Total (Unit x 52)
	Medians				
1.	N Berry St. Central to Northwood	0	4,218	$21.00	$1,092.00
2.	Northwood Berry St to Dorothy	0	0	$10.12	$526.24
3.	Northwood juniper medians Dorothy to Puente	0	6,060	$30.00	$1,560.00
4.	Lambert Rd. Pointe to Starflower	0	23,174	$116.00	$6,032.00
5.	Old Associated Eucalyptus to Imperial	0	17,840	$89.00	$4,628.00
6.	State College Blvd. Trail to Imperial	0	14,550	$73.00	$3,796.00
7.	Brea Blvd. Tracks to Juniper	0	30,925	$155.00	$8,060.00
8.	Birch St Poplar to just past Associated	0	32,440	$162.00	$8,424.00
9.	Imperial medians East entry marker to Berry	0	11,000	$55.00	$2,860.00
10.	Wardman/Southridge	0	1,620	$10.00	$520.00
11.	Havenhurst/Whittier Baywood to Whittier	0	1,800	$10.00	$520.00
12.	Sports Park Sunflower to Valencia	0	10,543	$53.00	$2,756.00
13.	Central Site to Tamarack	0	4,310	$22.00	$1,144.00
14.	Kraemer Birch to Imperial	0	4,275	$21.00	$1,092.00
15.	Valencia Imperial to Sandpiper	0	18,085	$90.00	$4,680.00
16.	Puente (artificial turf-blow) (hand water trees) Central to Whittier	575	0	$10.00	$520.00

Revised as of 7/15/2021

FEE SCHEDULE #5: BREA CONTINUED
(No irrigation system maintenance)

Bidder: Nieves Landscape, Inc.

Item	Location	Turf Square Footage	Planter Square Footage	Unit Price (weekly visit with 42 mows/year)	Total (Unit x 42)
	Greenbelts				
1.	Pyramid Park Northwood and La Canada	3,550	4,131	$56.00	$2,352.00
2.	Brea Blvd., (NE Corner) Brea Blvd and Central	7,893	2,720	$93.00	$3,906.00
3.	Lambert and State College	0	63,752	$319.00	$13,398.00
4.	Laurel Connector Park Laurel at Birch	2,420	880	$29.00	$1,218.00
5.	Parking Structure 1 Walnut and Ash	0	5,329	$27.00	$1,134.00
6.	PK Burgers PK East to City Limit	0	84,764	$396.20	$16,640.40
7.	Kraemer greenbelt Channel to Birch	0	16,377	$82.00	$3,444.00
	Entry Markers/Others				
1.	Trail at Birch Hills Birch Hills, Kraemer to cage	0	1,700	$5.00	$210.00
2.	Orbitor St Slope Kraemer to Saturn	0	60,120	$167.00	$7,014.00
3.	Central Entry Marker Central at Vallejo	0	150	$5.00	$210.00
4.	Lambert/Pioneer Marker	0	1,053	$5.00	$210.00
5.	State College Entry Marker State College and Elm	0	1,600	$5.00	$210.00
6.	Imperial Frontage Imperial and Jasmine Dr	0	6,700	$19.00	$798.00
7.	Imperial at Taps Imperial and Orange St	0	840	$5.00	$210.00
8.	Imperial Bus Stop Imperial and Laurel	0	1,936	$5.00	$210.00

Revised as of 7/15/2021 @

FEE SCHEDULE #5: BREA CONTINUED
(No irrigation system maintenance)

Bidder: Nieves Landscape, Inc.

9.	Imperial Sound wall Associated to east end of wall	0	16,950	$85.00	$3,570.00
10.	Brea Blvd. South of dentist office	0	140	$5.00	$210.00
11.	Whittier Circle Between Havenhurst/Puente	0	314	$5.00	$210.00
12.	Lambert Wall Cliffwood to St. College	0	12,566	$63.00	$2,646.00

Revised as of 7/15/2021

FEE SCHEDULE #5: BREA CONTINUED
(No irrigation system maintenance)

Bidder: Nieves Landscape, Inc.

Item	Location	Turf Square Footage	Planter Square Footage	Unit Price (weekly visit with 42 mows/year)	Total (Unit x 42)
	Parkways				
1.	Lambert N side pkwy/plntr Wildcat to Wandering	11,850	33,930	$288.00	$12,096.00
2.	Lambert S side pkwy/plntr Associated to HOA border east	13,985	5,300	$166.00	$6,972.00
3.	New Associated Rd Lambert to Sleepy Hollow	8,935	0	$89.00	$3,738.00
4.	Aurora St. Eucalyptus to Hillhaven	0	9,445	$47.00	$1,974.00
5.	Catalpa Imperial to Catalpa	700	810	$11.00	$462.00
6.	Randolph Circle South of Imperial Highway	0	7,635	$38.00	$1,596.00
7.	Orange Street Imperial to Ash	2,500	0	$25.00	$1,050.00
8.	N Berry St Central to Stonebridge	10,728	0	$107.00	$4,494.00

Total Schedule in words:
One hundred thirty-eight thousand three hundred ninety-two dollars and 64 cents
Total Schedule in figures: $ 138,392.64

* Bidder declares that he or she has read and understands the scope of services

_____

Staff Information

Number of days per week: 4
Staff per day: 3
Total staff hours per day: 24

FEE SCHEDULE #8: BREA-LANDSCAPE MAINTENANCE AT MAINTENANCE DISTRICT 1

Revised as of 7/15/2021

Bidder: Nieves Landscape, Inc.

Item	Description	Quantity in Square Feet	Unit Price 1. Per mow 2. Per month	Total 1. Unit x 42 2. Unit x 12
1.	Mow at Maintenance District #1	2,210	$31.00	$1,302.00
2.	Weekly landscape maintenance at Maintenance District #1	165,060	$1,254.00	$15,048.00

Total Schedule in words:
Sixteen thousand three hundred fifty dollars and no cents
Total Schedule in figures: $16,350.00

* Bidder declares that he or she has read and understands the scope of services

_____

Staff Information

Number of days per week: 1

Staff per day: 3

Total staff hours per day: 24

FEE SCHEDULE #9: BREA-LANDSCAPE MAINTENANCE AT MAINTENANCE DISTRICT 3

Revised as of 7/15/2021

Bidder: Nieves Landscape, Inc.

Item	Description	Quantity in Square Feet	Unit Price 1. Per mow 2. Per month	Total 1. Unit x 42 2. Unit x 12
1.	Mow at Maintenance District #3	94,062	$564.00	$23,688.00
2.	Weekly landscape maintenance at Maintenance District #3	56,364	$276.00	$3,312.00

Total Schedule in words:
Twenty-seven thousand dollars and no/cents
Total Schedule in figures: $ 27,000.00

* Bidder declares that he or she has read and understands the scope of services

_____

Staff Information

Number of days per week: 1

Staff per day: 3

Total staff hours per day: 24

FEE SCHEDULE #11: BREA-LANDSCAPE MAINTENANCE AT MAINTENANCE DISTRICT 6

Revised as of 7/15/2021 @

Bidder: Nieves Landscape, Inc.

Item	Description	Quantity in Square Feet	Unit Price 1. Per mow 2. Per month	Total 1. Unit x 42 2. Unit x 12
1.	Mow at Maintenance District #6	12,400	$136.00	$5,712.00
2.	Weekly landscape maintenance at Maintenance District #6	684,560	$4,940.66	$59,287.92

Total Schedule in words:
Sixty-four thousand nine hundred ninety-nine dollars and 92 cents
Total Schedule in figures: $64,999.92

* Bidder declares that he or she has read and understands the scope of services

_____

Staff Information

Number of days per week: 2

Staff per day: 3

Total staff hours per day: 24

FEE SCHEDULE #12: BREA-LANDSCAPE MAINTENANCE AT MAINTENANCE DISTRICT 7

Revised as of 7/15/2021

Bidder: Nieves Landscape, Inc.

Item	Description	Quantity in Square Feet	Unit Price 1. Per mow 2. Per month	Total 1. Unit x 42 2. Unit x 12
1.	Mow at Maintenance District #7	14,796	$225.00	$9,450.00
2.	Weekly landscape maintenance at Maintenance District #7	42,577	$330.00	$3,960.00

Total Schedule in words:
Thirteen thousand four hundred ten dollars and no cents
Total Schedule in figures: $ 13,410.00

* Bidder declares that he or she has read and understands the scope of services

_____

Staff Information

Number of days per week: 1

Staff per day: 3

Total staff hours per day: 24

APPROVED
By Neil Groom at 8:39 am, Jul 29, 2021

ACORD®

CERTIFICATE OF LIABILITY INSURANCE

DATE (MM/DD/YYYY) 7/29/2021

THIS CERTIFICATE IS ISSUED AS A MATTER OF INFORMATION ONLY AND CONFERS NO RIGHTS UPON THE CERTIFICATE HOLDER. THIS CERTIFICATE DOES NOT AFFIRMATIVELY OR NEGATIVELY AMEND, EXTEND OR ALTER THE COVERAGE AFFORDED BY THE POLICIES BELOW. THIS CERTIFICATE OF INSURANCE DOES NOT CONSTITUTE A CONTRACT BETWEEN THE ISSUING INSURER(S), AUTHORIZED REPRESENTATIVE OR PRODUCER, AND THE CERTIFICATE HOLDER.

IMPORTANT: If the certificate holder is an ADDITIONAL INSURED, the policy(ies) must have ADDITIONAL INSURED provisions or be endorsed. If SUBROGATION IS WAIVED, subject to the terms and conditions of the policy, certain policies may require an endorsement. A statement on this certificate does not confer rights to the certificate holder in lieu of such endorsement(s).

PRODUCER
Adamson & McGoldrick Insurance Solutions
1150 E. Orangethorpe Ave., Suite 100
Placentia, CA 92870

www.adamsonmcgoldrick.com

CONTACT NAME: Account Managers
PHONE (A/C, No, Ext): 714-257-9644 FAX (A/C, No): 714-257-9833
E-MAIL ADDRESS: certificates@adamsonmcgoldrick.com

INSURER(S) AFFORDING COVERAGE	NAIC #
INSURER A : XL Insurance America, Inc.	24554
INSURER B : XL Specialty Insurance Company	37885
INSURER C : Greenwich Insurance Company	22322
INSURER D : StarStone National Insurance Company A- ok'd	25496
INSURER E : Travelers Property Casualty Co of Amer	25674
INSURER F :	

INSURED
Nieves Landscape, Inc.
1629 E. Edinger Avenue
Santa Ana CA 92705

COVERAGES **CERTIFICATE NUMBER:** 63090335 **REVISION NUMBER:**

THIS IS TO CERTIFY THAT THE POLICIES OF INSURANCE LISTED BELOW HAVE BEEN ISSUED TO THE INSURED NAMED ABOVE FOR THE POLICY PERIOD INDICATED. NOTWITHSTANDING ANY REQUIREMENT, TERM OR CONDITION OF ANY CONTRACT OR OTHER DOCUMENT WITH RESPECT TO WHICH THIS CERTIFICATE MAY BE ISSUED OR MAY PERTAIN, THE INSURANCE AFFORDED BY THE POLICIES DESCRIBED HEREIN IS SUBJECT TO ALL THE TERMS, EXCLUSIONS AND CONDITIONS OF SUCH POLICIES. LIMITS SHOWN MAY HAVE BEEN REDUCED BY PAID CLAIMS.

INSR LTR	TYPE OF INSURANCE	ADDL INSD	SUBR WVD	POLICY NUMBER	POLICY EFF (MM/DD/YYYY)	POLICY EXP (MM/DD/YYYY)	LIMITS	
A	✓ COMMERCIAL GENERAL LIABILITY ☐ CLAIMS-MADE ☑ OCCUR GEN'L AGGREGATE LIMIT APPLIES PER: ☐ POLICY ☑ PRO-JECT ☐ LOC OTHER:	✓	✓	NGL100297101	2/22/2021	2/22/2022	EACH OCCURRENCE DAMAGE TO RENTED PREMISES (Ea occurrence) MED EXP (Any one person) PERSONAL & ADV INJURY GENERAL AGGREGATE PRODUCTS - COMP/OP AGG Pollution	$ 1,000,000 $ 100,000 $ 5,000 $ 1,000,000 $ 2,000,000 $ 2,000,000 $ 1,000,000
B	AUTOMOBILE LIABILITY ✓ ANY AUTO ☐ OWNED AUTOS ONLY ☐ SCHEDULED AUTOS ✓ HIRED AUTOS ONLY ✓ NON-OWNED AUTOS ONLY	✓	✓	NBA100447600	2/22/2021	2/22/2022	COMBINED SINGLE LIMIT (Ea accident) BODILY INJURY (Per person) BODILY INJURY (Per accident) PROPERTY DAMAGE (Per accident)	$ 1,000,000 $ $ $ $
C	✓ UMBRELLA LIAB ✓ OCCUR EXCESS LIAB ☐ CLAIMS-MADE DED RETENTION $			NEC600605201	2/22/2021	2/22/2022	EACH OCCURRENCE AGGREGATE	$ 4,000,000 $ 4,000,000 $
D	WORKERS COMPENSATION AND EMPLOYERS' LIABILITY ANYPROPRIETOR/PARTNER/EXECUTIVE OFFICER/MEMBER EXCLUDED? Y/N: Y (Mandatory in NH) If yes, describe under DESCRIPTION OF OPERATIONS below	N / A	✓	T10210883	4/8/2021	4/8/2022	✓ PER STATUTE ☐ OTH-ER E.L. EACH ACCIDENT E.L. DISEASE - EA EMPLOYEE E.L. DISEASE - POLICY LIMIT	 $ 1,000,000 $ 1,000,000 $ 1,000,000
E E E	Contractors Equipment Business Personal Property Leased/Rented Equipment			6P70632A 6P70632A 6P70632A	2/22/2021 2/22/2021 2/22/2021	2/22/2022 2/22/2022 2/22/2022	Schedule Equip: $1,005,158 / $1,000 ded. $90,000 Leased/Rented $300,000/$1,000 ded.	

DESCRIPTION OF OPERATIONS / LOCATIONS / VEHICLES (ACORD 101, Additional Remarks Schedule, may be attached if more space is required)

City of Brea and its elected officials, officers, employees and agents are included as additional insured.
Primary and non-contributory wording applies. Waiver of subrogation applies per attached endorsement.
30 Day Notice of Cancellation

CERTIFICATE HOLDER

City of Brea
1 Civic Center Circle
Brea CA 92821

CANCELLATION

SHOULD ANY OF THE ABOVE DESCRIBED POLICIES BE CANCELLED BEFORE THE EXPIRATION DATE THEREOF, NOTICE WILL BE DELIVERED IN ACCORDANCE WITH THE POLICY PROVISIONS.

AUTHORIZED REPRESENTATIVE
Brian McGoldrick

© 1988-2015 ACORD CORPORATION. All rights reserved.

THIS ENDORSEMENT CHANGES THE POLICY. PLEASE READ IT CAREFULLY.

ADDITIONAL INSURED – OWNERS, LESSEES OR CONTRACTORS – SCHEDULED PERSON OR ORGANIZATION

This endorsement modifies insurance provided under the following:

COMMERCIAL GENERAL LIABILITY COVERAGE PART

SCHEDULE

Name Of Additional Insured Person(s) Or Organization(s)	Location(s) Of Covered Operations
As per Written contract	As per Written contract
Information required to complete this Schedule, if not shown above, will be shown in the Declarations.	

A. **Section II – Who Is An Insured** is amended to include as an additional insured the person(s) or organization(s) shown in the Schedule, but only with respect to liability for "bodily injury", "property damage" or "personal and advertising injury" caused, in whole or in part, by:

1. Your acts or omissions; or
2. The acts or omissions of those acting on your behalf;

in the performance of your ongoing operations for the additional insured(s) at the location(s) designated above.

However:

1. The insurance afforded to such additional insured only applies to the extent permitted by law; and
2. If coverage provided to the additional insured is required by a contract or agreement, the insurance afforded to such additional insured will not be broader than that which you are required by the contract or agreement to provide for such additional insured.

B. With respect to the insurance afforded to these additional insureds, the following additional exclusions apply:

This insurance does not apply to "bodily injury" or "property damage" occurring after:

1. All work, including materials, parts or equipment furnished in connection with such work, on the project (other than service, maintenance or repairs) to be performed by or on behalf of the additional insured(s) at the location of the covered operations has been completed; or
2. That portion of "your work" out of which the injury or damage arises has been put to its intended use by any person or organization other than another contractor or subcontractor engaged in performing operations for a principal as a part of the same project.

© Insurance Services Office, Inc., 2012

C. With respect to the insurance afforded to these additional insureds, the following is added to **Section III – Limits Of Insurance:**

If coverage provided to the additional insured is required by a contract or agreement, the most we will pay on behalf of the additional insured is the amount of insurance:

1. Required by the contract or agreement; or

2. Available under the applicable Limits of Insurance shown in the Declarations;

whichever is less.

This endorsement shall not increase the applicable Limits of Insurance shown in the Declarations.

© Insurance Services Office, Inc., 2012

63090335 | NIEVE-1 | 21/22 GL/AU/UMB/EQUIP/WC | Evett Lam | 7/29/2021 7:33:02 AM (PDT) | Page 3 of 12

THIS ENDORSEMENT CHANGES THE POLICY. PLEASE READ IT CAREFULLY.

ADDITIONAL INSURED - OWNERS, LESSEES OR CONTRACTORS - COMPLETED OPERATIONS

This endorsement modifies insurance provided under the following:

COMMERCIAL GENERAL LIABILITY COVERAGE PART
PRODUCTS/COMPLETED OPERATIONS LIABILITY COVERAGE PART

SCHEDULE

Name Of Additional Insured Person(s) Or Organization(s)
Blanket Additional Insured agreed

2400 FORNEY STREET

LOS ANGELES, CA 90031

Location And Description Of Completed Operations
Work described in writing in the contract, agreement or permit

Location(s) at which You performed work described in written contract, agreement or permit.

Information required to complete this Schedule, if not shown above, will be shown in the Declarations.

A. **Section II - Who Is An Insured** is amended to include as an additional insured the person(s) or organization(s) shown in the Schedule, but only with respect to liability for "bodily injury" or "property damage" caused, in whole or in part, by "your work" at the location designated and described in the Schedule of this endorsement performed for that additional insured and included in the "products-completed operations hazard".

However:

1. The insurance afforded to such additional insured only applies to the extent permitted by law; and

2. If coverage provided to the additional insured is required by a contract or agreement, the insurance afforded to such additional insured will not be broader than that which you are required by the contract or agreement to provide for such additional insured.

B. With respect to the insurance afforded to these additional insureds, the following is added to **Section III - Limits Of Insurance:**

If coverage provided to the additional insured is required by a contract or agreement, the most we will pay on behalf of the additional insured is the amount of insurance:

1. Required by the contract or agreement; or

2. Available under the applicable Limits of Insurance shown in the Declarations;

whichever is less.

This endorsement shall not increase the applicable Limits of Insurance shown in the Declarations.

 © Insurance Services Office, Inc., 2012

63090335 | NIEVE-1 | 21/22 GL/AU/UMB/EQUIP/WC | Evett Lam | 7/29/2021 7:33:02 AM (PDT) | Page 4 of 12

WAIVER OF TRANSFER OF RIGHTS OF RECOVERY AGAINST OTHERS TO US

This endorsement modifies insurance provided under the following:

COMMERCIAL GENERAL LIABILITY COVERAGE PART
PRODUCTS/COMPLETED OPERATIONS LIABILITY COVERAGE PART

SCHEDULE

Name Of Person Or Organization:
Information required to complete this Schedule, if not shown above, will be shown in the Declarations.

The following is added to Paragraph **8. Transfer Of Rights Of Recovery Against Others To Us** of **Section IV – Conditions:**

We waive any right of recovery we may have against the person or organization shown in the Schedule above because of payments we make for injury or damage arising out of your ongoing operations or "your work" done under a contract with that person or organization and included in the "products-completed operations hazard". This waiver applies only to the person or organization shown in the Schedule above.

© Insurance Services Office, Inc., 2008

POLICY NUMBER: XIC 421 1013

THIS ENDORSEMENT CHANGES THE POLICY. PLEASE READ IT CAREFULLY.

XL PLUS BUSINESS AUTO EXTENSION ENDORSEMENT

This endorsement modifies insurance provided under the following:

BUSINESS AUTO COVERAGE FORM

COVERAGE DESCRIPTION

A. Temporary Substitute Auto Physical Damage
B. Who Is An Insured
- **1. Broad Form Insured**
- **2. Employees As Insureds**
- **3. Additional Insured By Contract, Agreement or Permit**
- **4. Employee Hired Autos**

C. Supplementary Payments
D. Amended Fellow Employee Exclusion
E. Physical Damage Coverage
- **1. Rental Reimbursement**
- **2. Extra Expense – Broadened Coverage**
- **3. Personal Effects Coverage**
- **4. Lease Gap**
- **5. Glass Repair – Waiver Of Deductible**

F. Physical Damage Coverage Extensions
- **1. Additional Transportation Expense**
- **2. Hired Auto Physical Damage**

G. Business Auto Conditions
- **1. Notice Of Occurrence**
- **2. Waiver Of Subrogation**
- **3. Unintentional Failure To Disclose Hazards**
- **4. Primary Insurance**

H. Bodily Injury Redefined
I. Extended Cancellation Condition

© 2013 X.L. America, Inc. All Rights Reserved.
May not be copied without permission.
Includes copyrighted material of Insurance Services Office, Inc., with its permission.

A. Temporary Substitute Auto Physical Damage

SECTION I – COVERED AUTOS, **C. Certain Trailers, Mobile Equipment And Temporary Substitute Autos** is changed by adding the following:

If Physical Damage coverage is provided by this Coverage Form, the following types of vehicles are also covered "autos" for Physical Damage coverage:

1. Any "auto" you do not own while used with the permission of its owner as a temporary substitute for a covered "auto" you own that is out of service because of its:

a. Breakdown;

b. Repair;

c. Servicing;

d. "Loss"; or

e. Destruction.

B. Who Is An Insured

SECTION II – COVERED AUTOS LIABILITY COVERAGE, A. Coverage, 1. Who Is An Insured is changed by adding the following:

1. Broad Form Insured

For any covered "auto", any subsidiary, affiliate or organization, other than a partnership or joint venture, as may now exist or hereafter be constituted over which you assume active management or maintain ownership or majority interest, provided that you notify us within ninety (90) days from the date that any such subsidiary or affiliate is acquired or formed and that there is no similar insurance available to that organization. However, coverage does not apply to "bodily injury" or "property damage" that occurred before you acquired or formed the organization.

2. Employees As Insureds

Any "employee" of yours is an "insured" while using a covered "auto" you don't own, hire or borrow, in your business or your personal affairs.

3. Additional Insured By Contract, Agreement Or Permit

Any person or organization with whom you have agreed in writing in a contract, agreement or permit, to provide insurance such as is provided under this policy, provided that the "bodily injury" or "property damage" occurs subsequent to the execution of the written contract, agreement or permit.

4. Employee Hired Autos

An "employee" of yours is an "insured" while operating an "auto" hired or rented under a contract or agreement in that "employee's" name, with your permission, while performing duties related to the conduct of your business.

© 2013 X.L. America, Inc. All Rights Reserved.
May not be copied without permission.
Includes copyrighted material of Insurance Services Office, Inc., with its permission.

63090335 | NIEVE-1 | 21/22 GL/AU/UMB/EQUIP/WC | Evett Lam | 7/29/2021 7:33:02 AM (PDT) | Page 7 of 12

SECTION IV – BUSINESS AUTO CONDITIONS, B. General Conditions, 5. Other Insurance, b. is replaced with the following:

b. For Hired Auto Physical Damage Coverage, the following are deemed to be covered "autos" you own:

(1) Any covered "auto" you lease, hire, rent or borrow; and

(2) Any covered "auto" hired or rented by your "employee" under a contract in that individual "employee's" name, with your permission, while performing duties related to the conduct of your business.

However, any "auto" that is leased, hired, rented or borrowed with a driver is not a covered "auto".

C. Supplementary Payments

SECTION II – COVERED AUTOS LIABILITY COVERAGE, A. Coverage, 2. Coverage Extensions, a. Supplementary Payments is changed as follows:

Item **(2)** is deleted and replaced by the following:

(2) Up to $3,500 for cost of bail bonds (including bonds for related traffic law violations) required because of an "accident" we cover. We do not have to furnish these bonds.

Item **(4)** is deleted and replaced by the following:

(4) All reasonable expenses incurred by the "insured" at our request, including actual loss of earnings up to $500 a day because of time off from work.

D. Amended Fellow Employee Exclusion

SECTION II – COVERED AUTOS LIABILITY COVERAGE, B. Exclusions, 5. Fellow Employee does not apply.

The insurance provided under this Provision **D.** is excess over any other collectible insurance.

E. Physical Damage Coverage

SECTION III – PHYSICAL DAMAGE COVERAGE, A. Coverage is changed by adding the following:

1. Rental Reimbursement

a. We will pay for rental reimbursement expenses incurred by you for the rental of an "auto" because of "loss" to a covered "auto". Payment applies in addition to the otherwise applicable amount of each coverage you have on a covered "auto". No deductibles apply to this coverage.

b. We will pay only for those expenses incurred during the policy period beginning twenty-four (24) hours after the "loss" and ending, regardless of the policy's expiration, with the lesser of the following number of days:

© 2013 X.L. America, Inc. All Rights Reserved.
May not be copied without permission.
Includes copyrighted material of Insurance Services Office, Inc., with its permission.

63090335 | NIEVE-1 | 21/22 GL/AU/UMB/EQUIP/WC | Evett Lam | 7/29/2021 7:33:02 AM (PDT) | Page 8 of 12

(1) The number of days reasonably required to repair or replace the covered "auto". If "loss" is caused by theft, this number of days is added to the number of days it takes to locate the covered "auto" and return it to you.

(2) Thirty (30) days.

c. Our payment is limited to the lesser of the following amounts:

(1) Necessary and actual expenses incurred.

(2) $50 any one day per private passenger "auto";
$100 any one day per truck;
$1,500 any one period per private passenger "auto";
$3,000 any one period per truck; or
Higher limits if shown elsewhere in this policy.

d. This coverage does not apply while there are spare or reserve "autos" available to you for your operations.

e. If "loss" results from the total theft of a covered "auto" of the private passenger type, we will pay under this coverage only that amount of your rental reimbursement expenses which is not already provided for under the Physical Damage Coverage Extension.

2. Extra Expense – Broadened Coverage

We will pay for the expense of returning a stolen covered "auto" to you.

3. Personal Effects Coverage

If you have purchased Comprehensive Coverage on this policy for an "auto" you own and that "auto" is stolen, we will pay, without application of a deductible, up to $500 for "personal effects" stolen from the "auto".

As used in this endorsement, "personal effects" means tangible property that is worn or carried by an "insured". "Personal effects" does not include tools, jewelry, money or securities.

4. Lease Gap

In the event of a total "loss" to a covered "auto" shown in the Declarations, we will pay any unpaid amount due on the lease or loan for a covered "auto", less:

a. The amount paid under the Physical Damage Coverage Section of the policy; and

b. Any:

(1) Overdue lease/loan payments at the time of the "loss";

(2) Financial penalties imposed under a lease for excessive use, abnormal wear and tear or high mileage;

(3) Security deposits not returned by the lessor;

(4) Costs for extended warranties, Credit Life Insurance, Health, Accident or Disability Insurance purchases with the loan or lease; and

(5) Carry-over balances from previous loans or leases.

© 2013 X.L. America, Inc. All Rights Reserved.
May not be copied without permission.
Includes copyrighted material of Insurance Services Office, Inc., with its permission.

63090335 | NIEVE-1 | 21/22 GL/AU/UMB/EQUIP/WC | Evett Lam | 7/29/2021 7:33:02 AM (PDT) | Page 9 of 12

5. Glass Repair – Waiver Of Deductible

No deductible applies to glass damage if the glass is repaired rather than replaced.

F. Physical Damage Coverage Extensions

SECTION III – PHYSICAL DAMAGE COVERAGE, A. Coverage, 4. Coverage Extensions is amended by the following:

1. Additional Transportation Expense

Sections a. and **b.** are amended to provide a limit of $50 per day and a maximum limit of $1,000.

2. Hired Auto Physical Damage

The following section is added:

Any "auto" you lease, hire, rent or borrow is deemed to be a covered "auto" for physical damage coverage. The most we will pay for each covered "auto" is the lesser of:

(1) the actual cash value;

(2) the cost for repair or replacement; or

(3) $50,000, or higher limit if shown on the Declarations for Hired Auto Physical Damage Coverage.

For each covered "auto" a deductible of $100 for Comprehensive Coverage and $1,000 for Collision Coverage will apply.

G. Business Auto Conditions

SECTION IV – BUSINESS AUTO CONDITIONS, A. Loss Conditions is changed by the following:

1. Notice Of Occurrence

Section 2. – Duties In The Event Of Accident, Claim, Suit Or, Loss, a. is changed by adding the following:

If you report an injury to an "employee" to your workers' compensation carrier and if it is subsequently determined that the injury is one to which this insurance may apply, any failure to comply with this condition will be waived if you provide us with the required notice as soon thereafter as practicable after you know or reasonably should have known that this insurance may apply.

2. Waiver Of Subrogation

Section 5. Transfer Of Rights Of Recovery Against Others To Us is changed by adding the following:

However, this Condition does not apply to any person(s) or organization(s) with whom you have a written contract, but only to the extent that subrogation is waived prior to the "accident" or the "loss" under such contract with that person or organization.

© 2013 X.L. America, Inc. All Rights Reserved.
May not be copied without permission.
Includes copyrighted material of Insurance Services Office, Inc., with its permission.

63090335 | NIEVE-1 | 21/22 GL/AU/UMB/EQUIP/WC | Evett Lam | 7/29/2021 7:33:02 AM (PDT) | Page 10 of 12

SECTION IV – BUSINESS AUTO CONDITIONS, B. General Conditions is changed by the following:

3. Unintentional Failure To Disclose Hazards

The following condition is added:

Your unintentional failure to disclose all hazards as of the inception date of the policy shall not prejudice any insured with respect to the coverage afforded by this policy.

4. Primary Insurance

Condition 5. Other Insurance is changed by adding the following:

For any covered "auto" this insurance shall apply as primary and not contribute with any other insurance where such requirement is agreed in a written contract executed prior to a "loss".

H. Bodily Injury Redefined

SECTION V – DEFINITIONS, C. "Bodily injury" is replaced by the following:

"Bodily injury" means bodily injury, sickness or disease sustained by a person including mental anguish, mental injury, shock, fright or death resulting from any of these at any time.

I. Extended Cancellation Condition

COMMON POLICY CONDITIONS (Form IL 00 17), A. Cancellation, 2.b. is replaced by the following:

The greater of sixty (60) days or the time required by any applicable state amendatory endorsement before the effective date of cancellation if we cancel for any other reason.

All other terms and conditions of this policy remain unchanged.

© 2013 X.L. America, Inc. All Rights Reserved.
May not be copied without permission.
Includes copyrighted material of Insurance Services Office, Inc., with its permission.

63090335 | NIEVE-1 | 21/22 GL/AU/UMB/EQUIP/WC | Evett Lam | 7/29/2021 7:33:02 AM (PDT) | Page 11 of 12

WAIVER OF OUR RIGHT TO RECOVER FROM OTHERS ENDORSEMENT—CALIFORNIA

We have the right to recover our payments from anyone liable for an injury covered by this policy. We will not enforce our right against the person or organization named in the Schedule. (This agreement applies only to the extent that you perform work under a written contract that requires you to obtain this agreement from US.)

You must maintain payroll records accurately segregating the remuneration of your employees while engaged in the work described in the Schedule.

The additional premium for this endorsement shall be __*__% of the California workers' compensation premium otherwise due on such remuneration.

Schedule

Person or Organization	Job Description
	WHERE YOU ARE REQUIRED BY WRITTEN CONTRACT TO OBTAIN THIS AGREEMENT FROM US, PROVIDED THE CONTRACT IS SIGNED AND DATED PRIOR TO THE DATE OF LOSS TO WHICH THIS WAIVER APPLIES. IN NO INSTANCE SHALL THE PROVISIONS AFFORDED BY THIS ENDORSEMENT BENEFIT ANY COMPANY OPERATING AIRCRAFT FOR HIRE.

*The premium charge for this endorsement shall be 2% of the premium developed in the State of California, but not less than $500 policy minimum premium.

This endorsement changes the policy to which it is attached and is effective on the date issued unless otherwise stated.
(The information below is required only when this endorsement is issued subsequent to preparation of the policy.)

Endorsement Effective
Insured Nieves Landscape, Inc.
Insurance Company StarStone National Insurance Company

Policy No. T10210883

Endorsement No.
Policy Effective Date 04/08/2021

Countersigned By _____

WC 04 03 06
(Ed. 4-84)

©1998 by the Workers' Compensation Insurance Rating Bureau of California. All rights reserved.

City of Brea

COUNCIL COMMUNICATION

TO: Honorable Mayor and City Council Members

FROM: Bill Gallardo, City Manager

DATE: 08/17/2021

SUBJECT: Budget Adjustment to Remodel Areas of Police Administration

RECOMMENDATION

Appropriate $40,000 from the City's Fixed Asset Replacement Fund (Fund 182) to the Civic Center Remodel Project (CIP 7955) to remodel the Police Department's Professional Standards office and the Police Administration kitchen area.

BACKGROUND/DISCUSSION

The Professional Standards office in Police Administration was designed and constructed 15-20 years ago. The space is odd-shaped and inefficient, is made of temporary walls, and is a mismatch to the remainder of Police Administration and the remainder of Level 3 of the Civic Center.

This area was not included in the Civic Center Remodel Project, as the original scope of the project was primarily to create office space for managers who worked in cubicles, and to update work stations for administrative staff.

The Police Department is seeking to remodel the Professional Standards office in order to create two spaces - an office for the Professional Standards lieutenant and a separate interview/conference room. The Police Department would have the ability to convert the interview/conference room into another office in the future, if needed.

The Police Department received a quote from People Space to remodel the space. The remodel would cost approximately $32,900. People Space is the same vendor that has been contracted to complete the Civic Center Remodel Project. In addition, there is a partially remodeled kitchen area in Police Administration and the Police Department is seeking an additional $7,000 (approximately) to complete the remodel of this space.

If the budget adjustment is approved, the Public Works Director has the authority to execute the construction contract for this project per the City's Purchasing Code since the project is under $200,000.

COMMISSION/COMMITTEE RECOMMENDATION

The Finance Committee reviewed staff's recommendation at their August 10, 2021 meeting and recommended for Council approval.

FISCAL IMPACT/SUMMARY

$40,000 is needed to fund the proposed project. The project is recommended to be funded by the Fixed Asset Replacement Program Fund (182). If approved, this appropriation will be included in the 1st quarter budget adjustments for FY 2021-22. There is no General Fund impact.

RESPECTFULLY SUBMITTED:

William Gallardo, City Manager
Prepared by: Christopher Harvey, Police Lieutenant
Concurrence: Adam Hawley, Police Chief

Agenda Item 27.

City of Brea

COUNCIL COMMUNICATION

TO: Honorable Mayor and City Council Members

FROM: Bill Gallardo, City Manager

DATE: 08/17/2021

SUBJECT: Investment Policy Guidelines for the City of Brea's Employee Benefits Fund Pension Plan

RECOMMENDATION

Review and approve the Investment Policy Guidelines for the City of Brea's Employee Benefits Fund Pension Plan through Public Agency Retirement Services (PARS).

BACKGROUND/DISCUSSION

On November 17, 2015, the City Council approved participation within the Public Agencies Post-Employment Benefit Trust Program that established the City of Brea's Employee Benefits Fund Pension Plan ("Plan"). The Plan is administered by Public Agencies Retirement Services (PARS) to assist the City in "pre-funding" its pension obligations in an irrevocable Section 115 Trust account. Some of the benefits of participating in the program are summarized below:

- City maintains oversight of investment management and control over the risk tolerance level of the portfolio;
- Assets held in the PARS Section 115 Trust account allow for greater investment flexibility and risk diversification compared to the City's General Fund investments;
- Assets could be accessed to offset unexpected CalPERS rate increases (rate stabilization);
- Potential to improve an agency's bond rating; and
- Flexibility to access assets at any time as long as it is used to pay employer's pension obligations.

The investment strategies for these assets are defined within the City's Investment Policy Guidelines that were developed and evaluated by PARS, HighMark Capital Management (the Plan's Investment Advisory Firm) and the City's Investment Advisory Committee (IAC). The purpose of the Investment Policy Guidelines is to facilitate communication and confirm the City's investment objectives for the Plan. It also helps maintain a long-term perspective when market volatility is caused by short-term market movements. The policy also details the Plan's Trustee, the Investment Manager and the Investment Advisory Committee's roles and responsibilities.

On January 19, 2016, the City Council adopted the City's Investment Policy Guidelines for the Plan and confirmed the Investment Advisory Committee's recommendation of selecting the "Balanced" Asset Allocation Strategy of the five strategies offered by the Plan's Investment Advisory Firm, HighMark Capital Management. This strategy provides growth of principal and income on the long term horizon.

On June 26, 2021, the Investment Advisory Committee, including PARS and HighMark Capital Management, reviewed the Investment Policy Guidelines and recommended providing minor clarifying language under the responsibility of the Investment Manager. This provides consistent language as what is presented in the City/Successor Agency Investment Policy.

The recommendation is to amend the Investment Policy Guidelines for the City of Brea's Employee Benefits Fund Pension Plan Trust Fund to expand the Investment Manager's responsibility to include or amend the following:

- *Communicate to the City Council, the Investment Advisory Committee, City Treasurer and the Administrative Services Director when investment portfolios demonstrate low performance, if any, which occurs between each periodic report; and*
- *If a security owned by the City is downgraded to a level below the requirements of this policy, making the security ineligible for additional purchases, the following steps will be taken:*
    - *Any actions taken related to the downgrade by the investment manager will be communicated to the City Council, the Investment Advisory Committee, City Treasurer and the Administrative Services Director within two (2) business days.*
    - *If a decision is mde to retain the secuity, the credit situation will be monitored and reported to the City Council.*

This change is incorporated as part of the 2021 annual review and no other changes are recommended at this time. For ease of reference, both the redline version and clean version with the recommended changes are attached.

COMMISSION/COMMITTEE RECOMMENDATION

On July 26, 2021, the Investment Advisory Committee reviewed the Investment Policy Guidelines and recommended for City Council approval.

FISCAL IMPACT/SUMMARY

There is no fiscal impact for approving the Investment Policy Guidelines.

RESPECTFULLY SUBMITTED:

William Gallardo, City Manager
Prepared by: Alicia Brenner, Senior Fiscal Analyst
Concurrence: Cindy Russell, Administrative Services Director

Attachments

Pension Trust Fund Investment Policy Guidelines - Redline Version

Pension Trust Fund Investment Policy Guidelines - Clean Version

---

Investment Policy Guidelines

FINAL

City of Brea

Employee Benefits Fund Pension Plan

August 2021

HIGHMARK®
CAPITAL MANAGEMENT

Investment Policy Guidelines

Scope and Purpose

The purpose of these Investment Policy Guidelines is to:

- Facilitate the process of ongoing communication between the Plan Sponsor and its plan fiduciaries;
- Confirm the Plan's investment goals and objectives and management policies applicable to the investment portfolio identified below and obtained from the Plan Sponsor;
- Provide a framework to construct a well-diversified asset mix that can potentially be expected to meet the account's investment needs that is consistent with the account's investment objectives, liquidity considerations and risk tolerance;
- Identify any unique considerations that may restrict or limit the investment discretion of its designated investment managers;
- Help maintain a long-term perspective when market volatility is caused by short-term market movements.

Key Plan Sponsor Account Information as of August 2021

Plan Sponsor:	City of Brea
Governance:	Investment Advisory Committee for the City of Brea
Plan Name ("Plan"):	City of Brea Employee Benefit Fund Pension Plan
Trustee:	US Bank Contact: Sue Hughes, 949-224-7209 Susan.Hughes@usbank.com
Type of Account:	*Pension Plan*
Investment Manager:	US Bank, as discretionary trustee, has delegated investment management responsibilities to HighMark Capital Management, Inc. ("Investment Manager"), an SEC-registered investment adviser Contact: Keith Stribling, CFA, 949-553-2591 Keith.stribling@highmarkcapital.com

Investment Authority: Except as otherwise noted, the Trustee, US Bank, has delegated investment authority to HighMark Capital Management, an SEC-registered investment adviser. Investment Manager has full investment discretion over the managed assets in the account. Investment Manager is authorized to purchase, sell, exchange, invest, reinvest and manage the designated assets held in the account, all in accordance with account's investment objectives, without prior approval or subsequent approval of any other party(ies).

Investment Objectives and Constraints

The goal of the Plan's investment program is to provide a reasonable level of growth which, will result in sufficient assets to pay the present and future obligations of the Plan. The following objectives are intended to assist in achieving this goal:

- The Plan should seek to earn a return in excess of its policy benchmark over the life of the Plan.
- The Plan's assets will be managed on a total return basis which takes into consideration both investment income and capital appreciation. While the Plan Sponsor recognizes the importance of preservation of capital, it also adheres to the principle that varying degrees of investment risk are generally rewarded with compensating returns. To achieve these objectives, the Plan Sponsor allocates its assets (asset allocation) with a strategic perspective of the capital markets.

Investment Time Horizon: Long-term

Anticipated Cash Flows: Assets in the Plan will seek to mitigate the impact of future rate increases from CalPERS. Typically increases in rates come with a one-year advance warning, however this Plan may transfer assets to CalPERS at any time.

Investment Objective: The primary objective is to maximize total Plan return, subject to the risk and quality constraints set forth herein. The investment objective the Plan Sponsor has selected is the **Balanced Objective**, which has a dual goal to seek growth of income and principal.

Risk Tolerance: *Balanced*
The account's risk tolerance has been rated moderate, which demonstrates that the account can accept price fluctuations to pursue its investment objectives.

Strategic Asset Allocation: The asset allocation ranges for this objective are listed below:

Strategic Asset Allocation Ranges		
Cash	Fixed Income	Equity
0-20%	30%-50%	50%-70%
Policy: 5%	Policy: 35%	Policy: 60%

Market conditions may cause the account's asset allocation to vary from the stated range from time to time. The Investment Manager will rebalance the portfolio no less than quarterly and/or when the actual weighting differs substantially from the strategic range, if appropriate and consistent with your objectives.

Security Guidelines:

Equities

With the exception of limitations and constraints described above, Investment Manager may allocate assets of the equity portion of the account among various market capitalizations (large, mid, small) and investment styles (value, growth). Further, Investment Manager may allocate assets among domestic, international developed and emerging market equity securities.

Total Equities	50%-70%
Equity Style	*Range*
Domestic Large Cap Equity	20%-50%
Domestic Mid Cap Equity	0%-15%
Domestic Small Cap Equity	0%-20%
International Equity (incl. Emerging Markets)	0%-20%
Real Estate Investment Trust (REIT)	0%-10%

Fixed Income

In the fixed income portion of the account, Investment Manager may allocate assets among various sectors and industries, as well as varying maturities and credit quality that are consistent with the overall goals and objectives of the portfolio.

Total Fixed Income	30%-50%

Eligible Investments

- Debt obligations of the U.S. Government, its agencies, and Government Sponsored Enterprises
- Mortgage-Backed Securities (MBS)
- Asset Backed Securities (ABS)
- Collateralized Mortgage Obligations (CMO)
- Commercial Mortgage-Backed Securities (CMBS)
- Corporate debt securities issued by U.S. or foreign entities including, but not limited to, limited partnerships, equipment trust certificates and enhanced equipment trust certificates

Quality

The portfolio will maintain a minimum weighted average quality of A- at all times. Individual securities shall have a minimum quality rating of Baa3 by Moody's or BBB- by Standard & Poor's (S&P).

Duration

The manager will maintain the portfolio duration within +/- 25% of the benchmark duration at all times.

Diversification

- Any individual issuer position size is to be less than 10% of the portfolio assets at time of purchase, with the exception of securities issued or guaranteed by the U.S. Government, its agencies, and Government Sponsored Enterprises
- High Yield will be managed with funds and/or ETF's at less than 5% of the total portfolio.

Performance Benchmarks:

The performance of the total Plan shall be measured over a three and five-year periods. These periods are considered sufficient to accommodate the market cycles experienced with investments. The performance shall be compared to the return of the total portfolio blended benchmark shown below.

Total Portfolio Blended Benchmark

32.00%	S&P500 Index
6.00%	Russell Mid Cap Index
9.00%	Russell 2000 Index
4.00%	MSCI Emerging Market Index
7.00%	MSCI EAFE Index
2.00%	Wilshire REIT
27.00%	BC US Aggregate Index
6.75%	ML 1-3 Year US Corp/Gov't
1.25%	US High Yield Master II
5.00%	Citi 1Mth T-Bill

Asset Class/Style Benchmarks

Over a market cycle, the long-term objective for each investment strategy is to add value to a market benchmark. The following are the benchmarks used to monitor each investment strategy:

Large Cap Equity	S&P 500 Index
Growth	S&P 500 Growth Index
Value	S&P 500 Value Index
Mid Cap Equity	Russell Mid Cap Index
Growth	Russell Mid Cap Growth
Value	Russell Mid Cap Value
Small Cap Equity	Russell 2000 Index
Growth	Russell 2000 Growth
Value	Russell 2000 Value
REITs	Wilshire REIT
International Equity	MSCI EAFE
Investment Grade Bonds	Barclays US Aggregate

Security Selection

Investment Manager may utilize a full range of investment vehicles when constructing the investment portfolio, including but not limited to individual securities, mutual funds, and exchange-traded funds. In addition, to the extent permissible, Investment Manager is authorized to invest in shares of mutual funds in which the Investment Manager serves as advisor or sub-adviser.

Investment Limitations:

The following investment transactions are prohibited:

- Direct investments in precious metals (precious metals mutual funds and exchange-traded funds are permissible).
- Venture Capital
- Short sales*
- Purchases of Letter Stock, Private Placements, or direct payments
- Leveraged Transactions*
- Commodities Transactions Puts, calls, straddles, or other option strategies*
- Purchases of real estate, with the exception of REITs
- Individual high yield or below investment grade rated bonds (high yield will be managed with funds and/or ETF's)
- Derivatives, with exception of ETFs*

**Permissible in diversified mutual funds and exchange-traded funds*

Duties and Responsibilities

Responsibilities of Plan Sponsor

The Investment Advisory Committee of the City of Brea is responsible for:

- Confirming in writing the accuracy of this Investment Policy Guidelines.
- Advising Trustee and Investment Manager of any change in the plan/account's financial situation, funding status, or cash flows, which could possibly necessitate a change to the account's overall risk tolerance, time horizon or liquidity requirements; and thus would dictate a change to the overall investment objective and goals for the account.

The City Treasurer and Administrative Services Director is responsible for:

- Monitoring and supervising all service vendors and investment options, including investment managers.
- Avoiding prohibited transactions and conflicts of interest.
- Providing quarterly investment reports to the City Council.

Responsibilities of Trustee

The plan Trustee is responsible for:

- Valuing the holdings.
- Collecting all income and dividends owed to the Plan.
- Settling all transactions (buy-sell orders).

Responsibilities of Investment Manager

The Investment Manager is responsible for:

- Assisting the Investment Advisory Committee with the development and maintenance of this Investment Policy Guidelines annually.
- Meeting with Investment Advisory Committee semi-annually to review portfolio structure, holdings, and performance.
- Meeting with City Council annually to review portfolio structure, holdings, and performance.
- Providing quarterly investment reports to the Investment Advisory Committee.
- Designing, recommending and implementing an appropriate asset allocation consistent with the investment objectives, time horizon, risk profile, guidelines and constraints outlined in this statement.
- Researching and monitoring investment advisers and investment vehicles.
- Purchasing, selling, and reinvesting in securities held in the account.
- Monitoring the performance of all selected assets.
- Communicate to the City Council, the Investment Advisory Committee, City Treasurer and the Administrative Services Director when investment portfolio demonstrates low performance, if any, which occurs between each periodic report.
- If a security owned by the City is downgraded to a level below the requirements of this policy, making the security ineligible for additional purchases, the following steps will be taken:
    - Any actions taken related to the downgrade by the investment manager will be communicated to the City Council, the Investment Advisory Committee, City Treasurer and the Administrative Services Director within two (2) business days.
    - If a decision is made to retain the security, the credit situation will be monitored and reported to the City Council.

- Voting proxies, if applicable.
- Recommending changes to any of the above.
- Periodically reviewing the suitability of the investments, being available to meet with the committee at least once each year, and being available at such other times within reason at your request.
- Informing the committee if changes occur in personnel that are responsible for portfolio management or research.

Acknowledgement and Acceptance

I/We being the Plan Sponsor with responsibility for the account(s) held on behalf of the Plan Sponsor specified below, designate Investment Manager as having the investment discretion and management responsibility indicated in relation to all assets of the Plan or specified Account. If such designation is set forth in the Plan/trust, I/We hereby confirm such designation as Investment Manager.

I have read the Investment Policy Guidelines, and confirm the accuracy of it, including the terms and conditions under which the assets in this account are to be held, managed, and disposed of by Investment Manager. This Investment Policy Guidelines supersedes all previous versions of an Investment Policy Guidelines or investment objective instructions that may have been executed for this account.

_____ Date:_____

Plan Sponsor: City of Brea

_____ Date:_____

Investment Manager: Keith Stribling, CFA, Senior Portfolio Manager, (949) 553-2591

Investment Policy Guidelines

FINAL

City of Brea

Employee Benefits Fund Pension Plan

August 2021

Investment Policy Guidelines

Scope and Purpose

The purpose of these Investment Policy Guidelines is to:

- Facilitate the process of ongoing communication between the Plan Sponsor and its plan fiduciaries;
- Confirm the Plan's investment goals and objectives and management policies applicable to the investment portfolio identified below and obtained from the Plan Sponsor;
- Provide a framework to construct a well-diversified asset mix that can potentially be expected to meet the account's investment needs that is consistent with the account's investment objectives, liquidity considerations and risk tolerance;
- Identify any unique considerations that may restrict or limit the investment discretion of its designated investment managers;
- Help maintain a long-term perspective when market volatility is caused by short-term market movements.

Key Plan Sponsor Account Information as of August 2021

Plan Sponsor:	City of Brea
Governance:	Investment Advisory Committee for the City of Brea
Plan Name ("Plan"):	City of Brea Employee Benefit Fund Pension Plan
Trustee:	US Bank Contact: Sue Hughes, 949-224-7209 Susan.Hughes@usbank.com
Type of Account:	*Pension Plan*
Investment Manager:	US Bank, as discretionary trustee, has delegated investment management responsibilities to HighMark Capital Management, Inc. ("Investment Manager"), an SEC-registered investment adviser Contact: Keith Stribling, CFA, 949-553-2591 Keith.stribling@highmarkcapital.com

Investment Authority: Except as otherwise noted, the Trustee, US Bank, has delegated investment authority to HighMark Capital Management, an SEC-registered investment adviser. Investment Manager has full investment discretion over the managed assets in the account. Investment Manager is authorized to purchase, sell, exchange, invest, reinvest and manage the designated assets held in the account, all in accordance with account's investment objectives, without prior approval or subsequent approval of any other party(ies).

Investment Objectives and Constraints

The goal of the Plan's investment program is to provide a reasonable level of growth which, will result in sufficient assets to pay the present and future obligations of the Plan. The following objectives are intended to assist in achieving this goal:

- The Plan should seek to earn a return in excess of its policy benchmark over the life of the Plan.
- The Plan's assets will be managed on a total return basis which takes into consideration both investment income and capital appreciation. While the Plan Sponsor recognizes the importance of preservation of capital, it also adheres to the principle that varying degrees of investment risk are generally rewarded with compensating returns. To achieve these objectives, the Plan Sponsor allocates its assets (asset allocation) with a strategic perspective of the capital markets.

Investment Time Horizon: Long-term

Anticipated Cash Flows: Assets in the Plan will seek to mitigate the impact of future rate increases from CalPERS. Typically increases in rates come with a one-year advance warning, however this Plan may transfer assets to CalPERS at any time.

Investment Objective: The primary objective is to maximize total Plan return, subject to the risk and quality constraints set forth herein. The investment objective the Plan Sponsor has selected is the **Balanced Objective**, which has a dual goal to seek growth of income and principal.

Risk Tolerance: *Balanced*
The account's risk tolerance has been rated moderate, which demonstrates that the account can accept price fluctuations to pursue its investment objectives.

Strategic Asset Allocation: The asset allocation ranges for this objective are listed below:

Strategic Asset Allocation Ranges		
Cash	Fixed Income	Equity
0-20%	30%-50%	50%-70%
Policy: 5%	Policy: 35%	Policy: 60%

Market conditions may cause the account's asset allocation to vary from the stated range from time to time. The Investment Manager will rebalance the portfolio no less than quarterly and/or when the actual weighting differs substantially from the strategic range, if appropriate and consistent with your objectives.

Security Guidelines:

Equities

With the exception of limitations and constraints described above, Investment Manager may allocate assets of the equity portion of the account among various market capitalizations (large, mid, small) and investment styles (value, growth). Further, Investment Manager may allocate assets among domestic, international developed and emerging market equity securities.

Total Equities	50%-70%
Equity Style	*Range*
Domestic Large Cap Equity	20%-50%
Domestic Mid Cap Equity	0%-15%
Domestic Small Cap Equity	0%-20%
International Equity (incl. Emerging Markets)	0%-20%
Real Estate Investment Trust (REIT)	0%-10%

Fixed Income

In the fixed income portion of the account, Investment Manager may allocate assets among various sectors and industries, as well as varying maturities and credit quality that are consistent with the overall goals and objectives of the portfolio.

Total Fixed Income	30%-50%

Eligible Investments

- Debt obligations of the U.S. Government, its agencies, and Government Sponsored Enterprises
- Mortgage-Backed Securities (MBS)
- Asset Backed Securities (ABS)
- Collateralized Mortgage Obligations (CMO)
- Commercial Mortgage-Backed Securities (CMBS)
- Corporate debt securities issued by U.S. or foreign entities including, but not limited to, limited partnerships, equipment trust certificates and enhanced equipment trust certificates

Quality

The portfolio will maintain a minimum weighted average quality of A- at all times. Individual securities shall have a minimum quality rating of Baa3 by Moody's or BBB- by Standard & Poor's (S&P).

Duration

The manager will maintain the portfolio duration within +/- 25% of the benchmark duration at all times.

Diversification

- Any individual issuer position size is to be less than 10% of the portfolio assets at time of purchase, with the exception of securities issued or guaranteed by the U.S. Government, its agencies, and Government Sponsored Enterprises
- High Yield will be managed with funds and/or ETF's at less than 5% of the total portfolio.

Performance Benchmarks:

The performance of the total Plan shall be measured over a three and five-year periods. These periods are considered sufficient to accommodate the market cycles experienced with investments. The performance shall be compared to the return of the total portfolio blended benchmark shown below.

Total Portfolio Blended Benchmark

32.00%	S&P500 Index
6.00%	Russell Mid Cap Index
9.00%	Russell 2000 Index
4.00%	MSCI Emerging Market Index
7.00%	MSCI EAFE Index
2.00%	Wilshire REIT
27.00%	BC US Aggregate Index
6.75%	ML 1-3 Year US Corp/Gov't
1.25%	US High Yield Master II
5.00%	Citi 1Mth T-Bill

Asset Class/Style Benchmarks

Over a market cycle, the long-term objective for each investment strategy is to add value to a market benchmark. The following are the benchmarks used to monitor each investment strategy:

Large Cap Equity	S&P 500 Index
Growth	S&P 500 Growth Index
Value	S&P 500 Value Index
Mid Cap Equity	Russell Mid Cap Index
Growth	Russell Mid Cap Growth
Value	Russell Mid Cap Value
Small Cap Equity	Russell 2000 Index
Growth	Russell 2000 Growth
Value	Russell 2000 Value
REITs	Wilshire REIT
International Equity	MSCI EAFE
Investment Grade Bonds	Barclays US Aggregate

Security Selection

Investment Manager may utilize a full range of investment vehicles when constructing the investment portfolio, including but not limited to individual securities, mutual funds, and exchange-traded funds. In addition, to the extent permissible, Investment Manager is authorized to invest in shares of mutual funds in which the Investment Manager serves as advisor or sub-adviser.

Investment Limitations:

The following investment transactions are prohibited:

- Direct investments in precious metals (precious metals mutual funds and exchange-traded funds are permissible).
- Venture Capital
- Short sales*
- Purchases of Letter Stock, Private Placements, or direct payments
- Leveraged Transactions*
- Commodities Transactions Puts, calls, straddles, or other option strategies*
- Purchases of real estate, with the exception of REITs
- Individual high yield or below investment grade rated bonds (high yield will be managed with funds and/or ETF's)
- Derivatives, with exception of ETFs*

**Permissible in diversified mutual funds and exchange-traded funds*

Duties and Responsibilities

Responsibilities of Plan Sponsor

The Investment Advisory Committee of the City of Brea is responsible for:

- Confirming in writing the accuracy of this Investment Policy Guidelines.
- Advising Trustee and Investment Manager of any change in the plan/account's financial situation, funding status, or cash flows, which could possibly necessitate a change to the account's overall risk tolerance, time horizon or liquidity requirements; and thus would dictate a change to the overall investment objective and goals for the account.

The City Treasurer and Administrative Services Director is responsible for:

- Monitoring and supervising all service vendors and investment options, including investment managers.
- Avoiding prohibited transactions and conflicts of interest.
- Providing quarterly investment reports to the City Council.

Responsibilities of Trustee

The plan Trustee is responsible for:

- Valuing the holdings.
- Collecting all income and dividends owed to the Plan.
- Settling all transactions (buy-sell orders).

Responsibilities of Investment Manager

The Investment Manager is responsible for:

- Assisting the Investment Advisory Committee with the development and maintenance of this Investment Policy Guidelines annually.
- Meeting with Investment Advisory Committee semi-annually to review portfolio structure, holdings, and performance.
- Meeting with City Council annually to review portfolio structure, holdings, and performance.
- Providing quarterly investment reports to the Investment Advisory Committee.
- Designing, recommending and implementing an appropriate asset allocation consistent with the investment objectives, time horizon, risk profile, guidelines and constraints outlined in this statement.
- Researching and monitoring investment advisers and investment vehicles.
- Purchasing, selling, and reinvesting in securities held in the account.
- Monitoring the performance of all selected assets.
- Communicate to the City Council, the Investment Advisory Committee, City Treasurer and the Administrative Services Director when investment portfolio demonstrates low performance, if any, which occurs between each periodic report.
- If a security owned by the City is downgraded to a level below the requirements of this policy, making the security ineligible for additional purchases, the following steps will be taken:
    - Any actions taken related to the downgrade by the investment manager will be communicated to the City Council, the Investment Advisory Committee, City Treasurer and the Administrative Services Director within two (2) business days.
    - If a decision is made to retain the security, the credit situation will be monitored and reported to the City Council.

- Voting proxies, if applicable.
- Recommending changes to any of the above.
- Periodically reviewing the suitability of the investments, being available to meet with the committee at least once each year, and being available at such other times within reason at your request.
- Informing the committee if changes occur in personnel that are responsible for portfolio management or research.

Acknowledgement and Acceptance

I/We being the Plan Sponsor with responsibility for the account(s) held on behalf of the Plan Sponsor specified below, designate Investment Manager as having the investment discretion and management responsibility indicated in relation to all assets of the Plan or specified Account. If such designation is set forth in the Plan/trust, I/We hereby confirm such designation as Investment Manager.

I have read the Investment Policy Guidelines, and confirm the accuracy of it, including the terms and conditions under which the assets in this account are to be held, managed, and disposed of by Investment Manager. This Investment Policy Guidelines supersedes all previous versions of an Investment Policy Guidelines or investment objective instructions that may have been executed for this account.

_____ Date:_____

Plan Sponsor: City of Brea

J. Keith Stribling Digitally signed by J. Keith Stribling Date: 2021.08.09 10:57:04 -07'00'

_____ Date:_____

Investment Manager: Keith Stribling, CFA, Senior Portfolio Manager, (949) 553-2591

Agenda Item 28.

City of Brea

COUNCIL COMMUNICATION

TO: Honorable Mayor and City Council Members

FROM: Bill Gallardo, City Manager

DATE: 08/17/2021

SUBJECT: Investment Policy Guidelines for the City of Brea's Other Post Employment Benefits (OPEB) Trust Fund

RECOMMENDATION

Review and approve the Investment Guidelines for the City's Other Post Employment Benefits (OPEB) Trust Fund through Public Agency Retirement Services (PARS).

BACKGROUND/DISCUSSION

At their May 5, 2020 meeting, the City Council approved the Investment Guidelines as presented for the City's OPEB Trust Program ("Plan") following the Investment Advisory Committee's recommendation of a Moderate Investment Objective. The below chart summarizes the Strategic Asset Allocation for the Moderate Investment Objective:

Strategic Asset Allocation Ranges		
Cash	Fixed Income	Equity
0-20%	40%-60%	40%-60%
Policy: 5%	Policy: 45%	Policy: 50%

The goal of the Plan's investment program, as identified in the Investment Guidelines, is to provide a reasonable level of growth which will result in sufficient assets to pay the present and future obligations of the Plan. The following objectives are intended to assist in achieving this goal:

- The Plan should seek to earn a return in excess of its policy benchmark over the life of the Plan; and
- The Plan’s assets will be managed on a total return basis which takes into consideration both investment income and capital appreciation. While the Plan Sponsor recognizes the importance of preservation of capital, it also adheres to the principle that varying degrees of investment risk are generally rewarded with compensating returns. To achieve these objectives, the Plan Sponsor allocates its assets (asset allocation) with a strategic perspective of the capital markets.

The purpose of the guidelines are to:

- Facilitate the process of ongoing communication between the Plan sponsor and its plan fiduciaries;
- Confirm the Plan’s investment goals and objectives and management policies applicable to the investment portfolio identified below and obtained from the Plan sponsor;

- Provide a framework to construct a well-diversified asset mix that can potentially be expected to meet the account's investment needs that is consistent with the account's investment objectives, liquidity considerations and risk tolerance;
- Identify any unique considerations that may restrict or limit the investment discretion of its designated investment managers; and
- Help maintain a long-term perspective when market volatility is caused by short-term market movements.

In light of the economic uncertainty of the COVID-19 pandemic, the initial contribution to this Plan was temporarily suspended. The Plan currently has no assets and the City Council is anticipated to discuss an initial contribution at the Mid-Year Budget Update in February 2022. Any initial contribution is recommended to be dollar cost averaged over a 12-month period based upon the Investment Advisory Committee recommendation discussed at the April 27, 2020 Investment Advisory Committee meeting.

On June 26, 2021, the Investment Advisory Committee, including PARS and HighMark Capital Management, reviewed the Investment Policy Guidelines and recommended providing minor clarifying language under the responsibility of the Investment Manager. This provides consistent language as what is presented in the City/Successor Agency Investment Policy.

The recommendation is to amend the Investment Policy Guidelines for the City of Brea's Other Post Employment Benefits (OPEB) Trust Fund to expand the Investment Manager's responsibility to include or amend the following:

- *Communicate to the City Council, the Investment Advisory Committee, City Treasurer and the Administrative Services Director when investment portfolios demonstrate low performance, if any, which occurs between each periodic report; and*
- *If a security owned by the City is downgraded to a level below the requirements of this policy, making the security ineligible for additional purchases, the following steps will be taken:*
    - *Any actions taken related to the downgrade by the investment manager will be communicated to the City Council, the Investment Advisory Committee, City Treasurer and the Administrative Services Director within two (2) business days.*
    - *If a decision is mde to retain the secuity, the credit situation will be monitored and reported to the City Council.*

This change is incorporated as part of the 2021 annual review and no other changes are recommended at this time. For ease of reference, both the redline version and clean version with the recommended changes are attached.

COMMISSION/COMMITTEE RECOMMENDATION

On July 26, 2021, the Investment Advisory Committee reviewed the Investment Policy Guidelines and is recommended for City Council approval.

FISCAL IMPACT/SUMMARY

There is no fiscal impact for approving the Investment Policy Guidelines.

RESPECTFULLY SUBMITTED:

William Gallardo, City Manager
Prepared by: Alicia Brenner, Senior Fiscal Analyst
Concurrence: Cindy Russell, Administrative Services Director

Attachments

OPEB Trust Investment Policy Guidelines - Redline Version

OPEB Trust Investment Policy Guidelines - Clean Version

Investment Policy Guidelines

FINAL

City of Brea

OPEB

August 2021

HIGHMARK®
CAPITAL MANAGEMENT

Investment Policy Guidelines

Scope and Purpose

The purpose of these Investment Policy Guidelines is to:

- Facilitate the process of ongoing communication between the Plan Sponsor and its plan fiduciaries;
- Confirm the Plan's investment goals and objectives and management policies applicable to the investment portfolio identified below and obtained from the Plan Sponsor;
- Provide a framework to construct a well-diversified asset mix that can potentially be expected to meet the account's investment needs that is consistent with the account's investment objectives, liquidity considerations and risk tolerance;
- Identify any unique considerations that may restrict or limit the investment discretion of its designated investment managers;
- Help maintain a long-term perspective when market volatility is caused by short-term market movements.

Key Plan Sponsor Account Information as of August 2021

Plan Sponsor:	City of Brea
Governance:	Investment Advisory Committee for the City of Brea
Plan Name ("Plan"):	City of Brea OPEB plan
Trustee:	US Bank Contact: Sue Hughes, 949-224-7209 Susan.Hughes@usbank.com
Type of Account:	*Other Post Employment Benefit (OPEB) Plan*
Investment Manager:	US Bank, as discretionary trustee, has delegated investment management responsibilities to HighMark Capital Management, Inc. ("Investment Manager"), an SEC-registered investment adviser Contact: Keith Stribling, CFA, 949-553-2591 Keith.stribling@highmarkcapital.com

Investment Authority: Except as otherwise noted, the Trustee, US Bank, has delegated investment authority to HighMark Capital Management, an SEC-registered investment adviser. Investment Manager has full investment discretion over the managed assets in the account. Investment Manager is authorized to purchase, sell, exchange, invest, reinvest and manage the designated assets held in the account, all in accordance with account's investment objectives, without prior approval or subsequent approval of any other party(ies).

Investment Objectives and Constraints

The goal of the Plan's investment program is to provide a reasonable level of growth which, will result in sufficient assets to pay the present and future obligations of the Plan. The following objectives are intended to assist in achieving this goal:

- The Plan should seek to earn a return in excess of its policy benchmark over the life of the Plan.
- The Plan's assets will be managed on a total return basis which takes into consideration both investment income and capital appreciation. While the Plan Sponsor recognizes the importance of preservation of capital, it also adheres to the principle that varying degrees of investment risk are generally rewarded with compensating returns. To achieve these objectives, the Plan Sponsor allocates its assets (asset allocation) with a strategic perspective of the capital markets.

Investment Time Horizon:	Long-term
Anticipated Cash Flows:	An amount equal to one hundred percent (100%) of the annual OPEB obligations up to the annual required contribution is anticipated to be deposited upfront in July of each year with disbursements to be made monthly to pay ongoing OPEB obligations.
Target Rate of Return:	3.87%
Investment Objective:	**Moderate Objective**: The primary objective is to generate a reasonable level of growth. The investment objective the Plan Sponsor has selected is the **Moderate Objective**, which has a dual goal to seek growth of income and principal.
Risk Tolerance:	***Moderate*** The account's risk tolerance has been rated moderate, which demonstrates that the account can accept price fluctuations to pursue its investment objectives.
Portfolio Type:	***Highmark Plus (active strategy)***

Strategic Asset Allocation: The asset allocation ranges for this objective are listed below:

Strategic Asset Allocation Ranges		
Cash	Fixed Income	Equity
0-20%	40%-60%	40%-60%
Policy: 5%	Policy: 45%	Policy: 50%

Market conditions may cause the account's asset allocation to vary from the stated range from time to time. The Investment Manager will rebalance the portfolio no less than quarterly and/or when the actual weighting differs substantially from the strategic range, if appropriate and consistent with your objectives.

Security Guidelines:

Equities

With the exception of limitations and constraints described above, Investment Manager may allocate assets of the equity portion of the account among various market capitalizations (large, mid, small) and investment styles (value, growth). Further, Investment Manager may allocate assets among domestic, international developed and emerging market equity securities.

Total Equities	40%-60%
Equity Style	*Range*
Domestic Large Cap Equity	15%-45%
Domestic Mid Cap Equity	0%-10%
Domestic Small Cap Equity	0%-15%
International Equity (incl. Emerging Markets)	0%-15%
Real Estate Investment Trust (REIT)	0%-15%

Fixed Income

In the fixed income portion of the account, Investment Manager may allocate assets among various sectors and industries, as well as varying maturities and credit quality that are consistent with the overall goals and objectives of the portfolio.

Total Fixed Income	40%-60%
Fixed Income Style	*Range*
Long-term bonds (maturities >7 years)	0%-25%
Intermediate-term bonds (maturities 3-7 years)	25%-60%
Short-Term bonds (maturities <3 years)	0%-25%
High Yield bonds	0%-10%

Performance Benchmarks:

The performance of the total Plan shall be measured over a three and five-year periods. These periods are considered sufficient to accommodate the market cycles experienced with investments. The performance shall be compared to the return of the total portfolio blended benchmark shown below.

Total Portfolio Blended Benchmark

26.50%	S&P500 Index
5.00%	Russell Mid Cap Index
7.50%	Russell 2000 Index
3.25%	MSCI Emerging Market Index
6.00%	MSCI EAFE Index
1.75%	Wilshire REIT
33.50%	Barclays Capital US Aggregate Index
10.00%	ML 1-3 Year US Corp/Gov't
1.50%	US High Yield Master II
5.00%	Citi 1Mth T-Bill

Asset Class/Style Benchmarks

Over a market cycle, the long-term objective for each investment strategy is to add value to a market benchmark. The following are the benchmarks used to monitor each investment strategy:

Large Cap Equity	S&P 500 Index
Growth	S&P 500 Growth Index
Value	S&P 500 Value Index
Mid Cap Equity	Russell Mid Cap Index
Growth	Russell Mid Cap Growth
Value	Russell Mid Cap Value
Small Cap Equity	Russell 2000 Index
Growth	Russell 2000 Growth
Value	Russell 2000 Value
REITs	Wilshire REIT
International Equity	MSCI EAFE
Investment Grade Bonds	Barclays US Aggregate

Security Selection

Investment Manager may utilize a full range of investment vehicles when constructing the investment portfolio, including but not limited to individual securities, mutual funds, and exchange-traded funds. In addition, to the extent permissible, Investment Manager is authorized to invest in shares of mutual funds in which the Investment Manager serves as advisor or sub-adviser.

Investment Limitations:
The following investment transactions are prohibited:

- Direct investments in precious metals (precious metals mutual funds and exchange-traded funds are permissible).
- Venture Capital
- Short sales*
- Purchases of Letter Stock, Private Placements, or direct payments
- Leveraged Transactions*
- Commodities Transactions Puts, calls, straddles, or other option strategies*
- Purchases of real estate, with the exception of REITs
- Individual high yield or below investment grade rated bonds (high yield will be managed with funds and/or ETF's)
- Derivatives, with exception of ETFs*

**Permissible in diversified mutual funds and exchange-traded funds*

Duties and Responsibilities

Responsibilities of Plan Sponsor
The Investment Advisory Committee of the City of Brea is responsible for:

- Confirming in writing the accuracy of this Investment Policy Guidelines.
- Advising Trustee and Investment Manager of any change in the plan/account's financial situation, funding status, or cash flows, which could possibly necessitate a change to the account's overall risk tolerance, time horizon or liquidity requirements; and thus would dictate a change to the overall investment objective and goals for the account.

The City Treasurer and Administrative Services Director is responsible for:

- Monitoring and supervising all service vendors and investment options, including investment managers.
- Avoiding prohibited transactions and conflicts of interest.
- Providing quarterly investment reports to the City Council.

Responsibilities of Trustee
The plan Trustee is responsible for:

- Valuing the holdings.
- Collecting all income and dividends owed to the Plan.
- Settling all transactions (buy-sell orders).

Responsibilities of Investment Manager
The Investment Manager is responsible for:

- Assisting the Investment Advisory Committee with the development and maintenance of this Investment Policy Guidelines annually.
- Meeting with Investment Advisory Committee annually to review portfolio structure, holdings, and performance.
- Meeting with City Council annually to review portfolio structure, holdings, and performance.
- Providing quarterly investment reports to the Investment Advisory Committee.

- Designing, recommending and implementing an appropriate asset allocation consistent with the investment objectives, time horizon, risk profile, guidelines and constraints outlined in this statement.
- Researching and monitoring investment advisers and investment vehicles.
- Purchasing, selling, and reinvesting in securities held in the account.
- Monitoring the performance of all selected assets.
- Communicate to the City Council, the Investment Advisory Committee, City Treasurer and the Administrative Services Director when the investment portfolio demonstrates low performance, if any, which occurs between each periodic report.
- If a security owned by the City is downgraded to a level below the requirements of this policy, making the security ineligible for additional purchases, the following steps will be taken:
    - Any actions taken related to the downgrade by the investment manager will be communicated to the City Council, the Investment Advisory Committee, City Treasurer and the Administrative Services Director within two (2) business days.
    - If a decision is made to retain the security, the credit situation will be monitored and reported to the City Council.
- Voting proxies, if applicable.
- Recommending changes to any of the above.
- Periodically reviewing the suitability of the investments, being available to meet with the committee at least once each year, and being available at such other times within reason at your request.
- Informing the committee if changes occur in personnel that are responsible for portfolio management or research.

Acknowledgement and Acceptance

I/We being the Plan Sponsor with responsibility for the account(s) held on behalf of the Plan Sponsor specified below, designate Investment Manager as having the investment discretion and management responsibility indicated in relation to all assets of the Plan or specified Account. If such designation is set forth in the Plan/trust, I/We hereby confirm such designation as Investment Manager.

I have read the Investment Policy Guidelines, and confirm the accuracy of it, including the terms and conditions under which the assets in this account are to be held, managed, and disposed of by Investment Manager. This Investment Policy Guidelines supersedes all previous versions of an Investment Policy Guidelines or investment objective instructions that may have been executed for this account.

_____ Date:_____

Plan Sponsor: City of Brea

_____ Date:_____

Investment Manager: Keith Stribling, CFA, Senior Portfolio Manager, (949) 553-2591

Investment Policy Guidelines

FINAL

City of Brea

OPEB

August 2021

HIGHMARK®
CAPITAL MANAGEMENT

Investment Policy Guidelines

Scope and Purpose

The purpose of these Investment Policy Guidelines is to:

- Facilitate the process of ongoing communication between the Plan Sponsor and its plan fiduciaries;
- Confirm the Plan's investment goals and objectives and management policies applicable to the investment portfolio identified below and obtained from the Plan Sponsor;
- Provide a framework to construct a well-diversified asset mix that can potentially be expected to meet the account's investment needs that is consistent with the account's investment objectives, liquidity considerations and risk tolerance;
- Identify any unique considerations that may restrict or limit the investment discretion of its designated investment managers;
- Help maintain a long-term perspective when market volatility is caused by short-term market movements.

Key Plan Sponsor Account Information as of August 2021

Plan Sponsor:	City of Brea
Governance:	Investment Advisory Committee for the City of Brea
Plan Name ("Plan"):	City of Brea OPEB plan
Trustee:	US Bank Contact: Sue Hughes, 949-224-7209 Susan.Hughes@usbank.com
Type of Account:	*Other Post Employment Benefit (OPEB) Plan*
Investment Manager:	US Bank, as discretionary trustee, has delegated investment management responsibilities to HighMark Capital Management, Inc. ("Investment Manager"), an SEC-registered investment adviser Contact: Keith Stribling, CFA, 949-553-2591 Keith.stribling@highmarkcapital.com

Investment Authority: Except as otherwise noted, the Trustee, US Bank, has delegated investment authority to HighMark Capital Management, an SEC-registered investment adviser. Investment Manager has full investment discretion over the managed assets in the account. Investment Manager is authorized to purchase, sell, exchange, invest, reinvest and manage the designated assets held in the account, all in accordance with account's investment objectives, without prior approval or subsequent approval of any other party(ies).

Investment Objectives and Constraints

The goal of the Plan's investment program is to provide a reasonable level of growth which, will result in sufficient assets to pay the present and future obligations of the Plan. The following objectives are intended to assist in achieving this goal:

- The Plan should seek to earn a return in excess of its policy benchmark over the life of the Plan.
- The Plan's assets will be managed on a total return basis which takes into consideration both investment income and capital appreciation. While the Plan Sponsor recognizes the importance of preservation of capital, it also adheres to the principle that varying degrees of investment risk are generally rewarded with compensating returns. To achieve these objectives, the Plan Sponsor allocates its assets (asset allocation) with a strategic perspective of the capital markets.

Investment Time Horizon:	Long-term
Anticipated Cash Flows:	An amount equal to one hundred percent (100%) of the annual OPEB obligations up to the annual required contribution is anticipated to be deposited upfront in July of each year with disbursements to be made monthly to pay ongoing OPEB obligations.
Target Rate of Return:	3.87%
Investment Objective:	**Moderate Objective**: The primary objective is to generate a reasonable level of growth. The investment objective the Plan Sponsor has selected is the **Moderate Objective**, which has a dual goal to seek growth of income and principal.
Risk Tolerance:	***Moderate*** The account's risk tolerance has been rated moderate, which demonstrates that the account can accept price fluctuations to pursue its investment objectives.
Portfolio Type:	***Highmark Plus (active strategy)***

Strategic Asset Allocation: The asset allocation ranges for this objective are listed below:

Strategic Asset Allocation Ranges		
Cash	Fixed Income	Equity
0-20%	40%-60%	40%-60%
Policy: 5%	Policy: 45%	Policy: 50%

Market conditions may cause the account's asset allocation to vary from the stated range from time to time. The Investment Manager will rebalance the portfolio no less than quarterly and/or when the actual weighting differs substantially from the strategic range, if appropriate and consistent with your objectives.

Security Guidelines:

Equities

With the exception of limitations and constraints described above, Investment Manager may allocate assets of the equity portion of the account among various market capitalizations (large, mid, small) and investment styles (value, growth). Further, Investment Manager may allocate assets among domestic, international developed and emerging market equity securities.

Total Equities	40%-60%
Equity Style	*Range*
Domestic Large Cap Equity	15%-45%
Domestic Mid Cap Equity	0%-10%
Domestic Small Cap Equity	0%-15%
International Equity (incl. Emerging Markets)	0%-15%
Real Estate Investment Trust (REIT)	0%-15%

Fixed Income

In the fixed income portion of the account, Investment Manager may allocate assets among various sectors and industries, as well as varying maturities and credit quality that are consistent with the overall goals and objectives of the portfolio.

Total Fixed Income	40%-60%
Fixed Income Style	*Range*
Long-term bonds (maturities >7 years)	0%-25%
Intermediate-term bonds (maturities 3-7 years)	25%-60%
Short-Term bonds (maturities <3 years)	0%-25%
High Yield bonds	0%-10%

Performance Benchmarks:

The performance of the total Plan shall be measured over a three and five-year periods. These periods are considered sufficient to accommodate the market cycles experienced with investments. The performance shall be compared to the return of the total portfolio blended benchmark shown below.

Total Portfolio Blended Benchmark

26.50%	S&P500 Index
5.00%	Russell Mid Cap Index
7.50%	Russell 2000 Index
3.25%	MSCI Emerging Market Index
6.00%	MSCI EAFE Index
1.75%	Wilshire REIT
33.50%	Barclays Capital US Aggregate Index
10.00%	ML 1-3 Year US Corp/Gov't
1.50%	US High Yield Master II
5.00%	Citi 1Mth T-Bill

Asset Class/Style Benchmarks

Over a market cycle, the long-term objective for each investment strategy is to add value to a market benchmark. The following are the benchmarks used to monitor each investment strategy:

Large Cap Equity	S&P 500 Index
Growth	S&P 500 Growth Index
Value	S&P 500 Value Index
Mid Cap Equity	Russell Mid Cap Index
Growth	Russell Mid Cap Growth
Value	Russell Mid Cap Value
Small Cap Equity	Russell 2000 Index
Growth	Russell 2000 Growth
Value	Russell 2000 Value
REITs	Wilshire REIT
International Equity	MSCI EAFE
Investment Grade Bonds	Barclays US Aggregate

Security Selection

Investment Manager may utilize a full range of investment vehicles when constructing the investment portfolio, including but not limited to individual securities, mutual funds, and exchange-traded funds. In addition, to the extent permissible, Investment Manager is authorized to invest in shares of mutual funds in which the Investment Manager serves as advisor or sub-adviser.

Investment Limitations:
The following investment transactions are prohibited:

- Direct investments in precious metals (precious metals mutual funds and exchange-traded funds are permissible).
- Venture Capital
- Short sales*
- Purchases of Letter Stock, Private Placements, or direct payments
- Leveraged Transactions*
- Commodities Transactions Puts, calls, straddles, or other option strategies*
- Purchases of real estate, with the exception of REITs
- Individual high yield or below investment grade rated bonds (high yield will be managed with funds and/or ETF's)
- Derivatives, with exception of ETFs*

**Permissible in diversified mutual funds and exchange-traded funds*

Duties and Responsibilities

Responsibilities of Plan Sponsor
The Investment Advisory Committee of the City of Brea is responsible for:

- Confirming in writing the accuracy of this Investment Policy Guidelines.
- Advising Trustee and Investment Manager of any change in the plan/account's financial situation, funding status, or cash flows, which could possibly necessitate a change to the account's overall risk tolerance, time horizon or liquidity requirements; and thus would dictate a change to the overall investment objective and goals for the account.

The City Treasurer and Administrative Services Director is responsible for:

- Monitoring and supervising all service vendors and investment options, including investment managers.
- Avoiding prohibited transactions and conflicts of interest.
- Providing quarterly investment reports to the City Council.

Responsibilities of Trustee
The plan Trustee is responsible for:

- Valuing the holdings.
- Collecting all income and dividends owed to the Plan.
- Settling all transactions (buy-sell orders).

Responsibilities of Investment Manager
The Investment Manager is responsible for:

- Assisting the Investment Advisory Committee with the development and maintenance of this Investment Policy Guidelines annually.
- Meeting with Investment Advisory Committee annually to review portfolio structure, holdings, and performance.
- Meeting with City Council annually to review portfolio structure, holdings, and performance.
- Providing quarterly investment reports to the Investment Advisory Committee.

- Designing, recommending and implementing an appropriate asset allocation consistent with the investment objectives, time horizon, risk profile, guidelines and constraints outlined in this statement.
- Researching and monitoring investment advisers and investment vehicles.
- Purchasing, selling, and reinvesting in securities held in the account.
- Monitoring the performance of all selected assets.
- Communicate to the City Council, the Investment Advisory Committee, City Treasurer and the Administrative Services Director when the investment portfolio demonstrates low performance, if any, which occurs between each periodic report.
- If a security owned by the City is downgraded to a level below the requirements of this policy, making the security ineligible for additional purchases, the following steps will be taken:
    - Any actions taken related to the downgrade by the investment manager will be communicated to the City Council, the Investment Advisory Committee, City Treasurer and the Administrative Services Director within two (2) business days.
    - If a decision is made to retain the security, the credit situation will be monitored and reported to the City Council.
- Voting proxies, if applicable.
- Recommending changes to any of the above.
- Periodically reviewing the suitability of the investments, being available to meet with the committee at least once each year, and being available at such other times within reason at your request.
- Informing the committee if changes occur in personnel that are responsible for portfolio management or research.

Acknowledgement and Acceptance

I/We being the Plan Sponsor with responsibility for the account(s) held on behalf of the Plan Sponsor specified below, designate Investment Manager as having the investment discretion and management responsibility indicated in relation to all assets of the Plan or specified Account. If such designation is set forth in the Plan/trust, I/We hereby confirm such designation as Investment Manager.

I have read the Investment Policy Guidelines, and confirm the accuracy of it, including the terms and conditions under which the assets in this account are to be held, managed, and disposed of by Investment Manager. This Investment Policy Guidelines supersedes all previous versions of an Investment Policy Guidelines or investment objective instructions that may have been executed for this account.

_____ Date:_____

Plan Sponsor: City of Brea

J. Keith Stribling Digitally signed by J. Keith Stribling Date: 2021.08.09 10:51:15 -07'00'

_____ Date:_____

Investment Manager: Keith Stribling, CFA, Senior Portfolio Manager, (949) 553-2591

City of Brea

COUNCIL COMMUNICATION

TO: Honorable Mayor and City Council Members

FROM: Bill Gallardo, City Manager

DATE: 08/17/2021

SUBJECT: Annual Review of Statement of Investment Policy for the City of Brea/Successor Agency to the Brea Redevelopment Agency

RECOMMENDATION

Review and approve the City of Brea/Successor Agency to the Brea Redevelopment Agency Statement of Investment Policy.

BACKGROUND/DISCUSSION

State law allows the City Council to annually adopt the Statement of Investment Policy. Thus, per the City's fiscal policies, "The City Council will review and adopt annually an investment policy as recommended by the Investment Advisory Committee." The Investment Policy serves as a guideline for the investment of City and Successor Agency funds. The Brea Investment Advisory Committee annually reviews the Statement of Investment Policy for the City of Brea and the Successor Agency to the Brea Redevelopment Agency.

The below changes and additions were recommended by Chandler Asset Management, the City's Portfolio Manager, and were reviewed by the Investment Advisory Committee (IAC). The City's current investment policy takes advantage of the maximum allowable allocation in the Government Code for permitted investments such as Medium Term Corporate Notes, Pass Thru Securities, Bankers Acceptances, Money Market Funds, etc. Additionally, SB 998 provides updates regarding investment in zero or negative interest accrual investments. These changes were recommend by Chandler in order for the City's Investment Policy to be consistent with the passing of SB 988, which went into effect January 1, 2021.

1. Investment Instruments Section (Commercial Paper) – Update the language related to the maximum allowable allocation to Commercial Paper. SB 998 allows public agencies with more $100,000,000 of investable assets to increase the percent of portfolio invested in commercial paper to 40%. This provision is set to expire on January 1, 2026 (page 3). However, at the Investment Advisory Committee Meeting on July 26, 2021, the Committee recommended that the maximum allocation to Commercial Paper remain at its current allocation of 25%. Therefore, this change has since then been removed from the policy.
2. Prohibited Investments Section (zero or negative interest accrual investments) – SB 998 Authorizes a local agency to invest in securities issued or backed by the United States government that could result in zero- or negative- interest accrual if held to maturity. Currently, zero and negative interest rate policies are currently being adopted by multiple developed market central banks:

a. US Federal Reserve Fed Funds Policy Rate: 0.00% to 0.25%
b. European Central Bank Policy Rate: -0.50%
c. Bank of Japan Policy Rate: -0.10%

Existing law generally prohibits a local agency from investing any funds that could result in zero interest accrual if held to maturity. The amendment accommodates the possibility of a negative yield investment environment, if it should occur like it has in other developed countries. Leaving the funds in the bank may also result in a zero- or negative- interest accrual because of additional fees and penalties applied to large deposits and banks may also limit the size of deposits that can be held in an account in a negative yield environment because they are no longer profitable. The change requested is to adopt SB 998 as a risk mitigation tool. The base case does not call for a negative rate policy in the US; however, with rates already pegged close to zero, the policy tool cannot be ruled out. The language added to the policy also includes language that zero or negative interest securities, "will only be permitted in the portfolio in the event the United States Federal Reserve adopts a negative interest rate monetary policy framework" and "notification to the City Council , the Investment Advisory Committee, the City Treasurer, and the Administrative Services Director will be given within two (2) business days when securities of this type are being added to the portfolio." (page 4). The IAC agreed with this recommendation and this change has been included in the proposed policy.

Also, references throughout the Investment Policy to the Revenue and Budget Manager have changed to reflect the revised position to Financial Services Manager. This title change was approved by the City Council with the adoption of the FY 2021-22 Budget. These changes were approved by the IAC and included in the proposed policy.

For ease of reference, the current Investment Policy is attached along with the red-lined version with recommended changes. In addition, a clean version with the recommended changes is also attached.

COMMISSION/COMMITTEE RECOMMENDATION

The Investment Advisory Committee reviewed this item at their July 26, 2021 meeting and it was recommended for City Council approval.

FISCAL IMPACT/SUMMARY

There is no fiscal impact from the adoption of the Statement of Investment Policy.

RESPECTFULLY SUBMITTED:

William Gallardo, City Manager
Prepared by: Faith Madrazo, Financial Services Manager
Concurrence: Cindy Russell, Administrative Services Director

Attachments

Current Investment Policy - Adopted 8/18/20
Proposed Final Investment Policy - Redlined Version
Proposed Final Investment Policy - Clean Version

City Of Brea / Successor Agency to the Brea Redevelopment Agency

STATEMENT OF INVESTMENT POLICY
August 18, 2020

Purpose: This statement is intended to provide a guideline for the prudent investment of funds and to outline the policies for maximizing the efficiency of the City of Brea and Successor Agency to the Brea Redevelopment Agency ("City") cash management system. The ultimate goal is to enhance the economic status of the City while protecting its pooled funds. This investment policy has been prepared so as to be in conformance with all pertinent existing laws of the State of California for General Law cities.

Objective: The cash management system of the City is designed to accurately monitor and forecast expenditures and revenues, thus enabling the City to invest funds to the fullest extent possible. The City attempts to obtain a market rate of return without incurring undue risk to principal. The objectives of such investments are: 1) preserve capital, 2) maintain financial flexibility/liquidity, and 3) obtain a competitive rate of return on the City's investments.

Scope: This investment policy applies to the decisions and activities of the City with regard to investing the financial assets of all funds, including the following: General Fund, Special Revenue Funds, Assessment Funds, Enterprise Funds, Internal Service Funds, Capital Projects Funds, Debt Service Funds, Reserve Funds, Trust and Agency Funds, and any other funds that may be created from time to time. This policy does not apply retiree health care savings/trust/plan(s) or deferred compensation plans.

Investment Responsibility: Investment decisions of the City funds are the responsibility of the City Treasurer and/or Administrative Services Director, and shall comply with the Investment Policy of the City. These responsibilities include the authority to open accounts with banks, brokers and dealers, establish safekeeping accounts or other arrangements for the custody of securities and to execute such documents as may be necessary.

Those authorized to execute transactions for the City include the: 1) City Treasurer, 2) Administrative Services Director, 3) Revenue and Budget Manager, and 4) those specifically deputized by the City Treasurer and Administrative Services Director with said authorization to be filed with the City Clerk. The City Treasurer and Administrative Services Director shall insure that an authorized person is available at all times to execute the City's investments. Investment managers, brokers and dealers are to be provided with a list of specified names of those persons authorized to execute transactions. The City Council may authorize the delegation of investments to an outside investment manager.

Reporting: The Administrative Services Director shall be responsible for reporting the status of investments to the City Council and City Manager on a monthly basis. These reports will disclose, at a minimum, the following information about the characteristics of the City's portfolio:

A. An asset listing showing par value, cost and accurate and complete market value of each security, type of investment, issuer, and interest rate.

B. Monthly transactions for the period.
C. A one-page summary report that shows:
    1. Average maturity of the portfolio and modified duration of the portfolio;
    2. Maturity distribution of the portfolio;
    3. Average portfolio credit quality; and,
    4. Time-weighted total rate of return for the portfolio for the prior one month, three months, twelve months, year to date, and since inception compared to the City's market benchmark returns for the same periods;
D. A statement of compliance with investment policy, including a schedule of any transactions or holdings which do not comply with this policy or with the California Government Code, including a justification for their presence in the portfolio and a timetable for resolution.
E. A statement that the City has adequate funds to meet its cash flow requirements for the next six months.

Reports are to be submitted to the City Council and City Manager by the 3rd City Council meeting following the end of the reporting month.

The Investment Advisory Committee will review the status of investments on a quarterly basis. These reports shall include the type of investment, institution, face amount, market value, book value, interest rate, date of maturity, compliance to the investment policy.

If the City has an outside Investment Manager, the Investment Manager shall periodically report on the activity and results of the funds being managed by the Investment Manager. Additionally, the Investment Manager shall notify the Investment Advisory Committee when investment portfolios demonstrate low performance, if any, which occurs between each periodic report.

Prudence: The standard of prudence to be applied by the City Treasurer, Administrative Services Director, Revenue and Budget Manager, and those specifically deputized by the City Treasurer and Administrative Services Director with said authorization to be filed with the City Clerk shall be the "prudent investor" standard, as defined under Government Code Section 53600.3 which states, "When investing, reinvesting, purchasing, acquiring, exchanging, selling, or managing public funds, a trustee shall act with care, skill, prudence, and diligence under the circumstances then prevailing, including, but not limited to, the general economic conditions and the anticipated needs of the City, that a prudent person acting in a like capacity and familiarity with those matters would use in the conduct of funds of a like character and with like aims, to safeguard the principal and maintain the liquidity needs of the City/Successor Agency to the Brea Redevelopment Agency. Within the limitations of this section and considering individual investments as part of an overall strategy, investments may be acquired as authorized by law."

Ethics and Conflicts of Interest: Officers and employees involved in the City investment process shall refrain from personal business activity that could conflict with proper execution of the investment program or which could impair their ability to make impartial investment decisions. City employees and investment officials shall disclose any material financial interests in financial institutions that conduct business within the City, and they shall further disclose any personal financial/investment positions that could be related to the performance of the City's portfolio. City employees and officers shall refrain

from undertaking personal investment transactions with the same individual with whom business is conducted on behalf of the City.

Investment Instruments: Funds of the City may be invested in any instrument allowable under current legislation of the State of California (Government Code Section 53600 et sec.) so long as the investment is appropriate and consistent with this Investment Policy taking into consideration the City's investment objectives. Investment instruments may include:

- U.S. Treasury Obligations (Bills, Notes and Bonds)
- U.S. Government Agency Securities and Instrumentality's of Government Sponsored Corporations, including a maximum of 5% in callable bonds issued by such agencies
- Banker's Acceptances
- Commercial Paper
- Repurchase Agreements (requires a master repurchase agreement to be signed and on file with the bank or broker/dealer)
- Certificates of Deposit
- Negotiable Certificates of Deposit
- Passbook Savings Accounts
- Interest Bearing Checking Accounts
- Medium Term Corporate Notes
- Bank Money Market Accounts
- Local Agency Investment Fund (State Pool)
- County of Orange Investment Fund (County Pool)
- Other investments that are, or may become, legal investments through the State of California Government Code.

Provisions of Government Code Section 53601 shall be adhered to at all times. This includes, but is not limited to, the following restrictions:

- Bankers Acceptances cannot exceed 40% of the portfolio nor exceed 180 days;
- Commercial Paper cannot exceed 25% of the portfolio. Commercial Paper must be rated P-1 (Moody's), A-1 (Standard & Poor's) and cannot exceed 270 days;
- Money Market Funds cannot exceed 20% of the portfolio;
- Medium Term Corporate Notes cannot exceed 30% of the portfolio and must carry a minimum A rating;
- Pass-through securities including Collateralized Mortgage Obligations cannot exceed 20% of the portfolio.
    - Asset Backed Securities are limited to a maximum of 10% of the portfolio at time of purchase
        - Maximum maturity of 5 years
        - Asset Backed Security must be rated AA or higher
- Supranational Securities must be rated AA or higher, cannot exceed 15% of the portfolio and no more than 5% of portfolio per issuer. The maximum maturity cannot exceed 5 years.
- Additionally, the City will use the guidelines established by the joint committee of the California Municipal Treasurers Association and the California Society of Municipal Finance Officers as the basis for investing in government investment pools.

For purposes of complying with legal investment limitations, the percentage references pertaining to the above refers to the maturity value of the portfolio at the time of purchase.

If a security owned by the City is downgraded to a level below the requirements of this policy, making the security ineligible for additional purchases, the following steps will be taken:

- Any actions taken related to the downgrade by the investment manager will be communicated to the City Council, the Investment Advisory Committee, City Treasurer and the Administrative Services Director within two (2) business days.

- If a decision is made to retain the security, the credit situation will be monitored and reported to the City Council.

Prohibited Investments: The City shall not invest any funds in derivatives, inverse floaters, range notes, or interest- only strips that are derived from a pool of mortgages. The City shall not invest any funds in any security that could result in a zero interest accrual if held to maturity.

Collateralization: Collateralization shall be required on two types of investments: Certificates of deposit and repurchase (and reverse repurchase) agreements. A collateral agreement must be current and on file before any funds can be transferred for collateralized certificates of deposit.

Collateral shall be held by an independent third party with whom the City has a current written custodial agreement. A clearly marked evidence of ownership (safekeeping receipt) must be supplied to the City and retained. The right of collateral substitution is granted in accordance with the following requirements:

A. Certificates of Deposit
   1. Government securities used as collateral require one hundred and ten (110) percent of market value to the face amount of the deposit
   2. Promissory notes secured by first trust deeds used as collateral require one hundred and fifty (150) percent of market value to the face amount of the deposit
   3. Irrevocable letters of Credit issued by the Federal Home Loan Bank of San Francisco require one hundred and five (105) percent of market value to the face amount of the deposit

B. Repurchase and Reverse Repurchase Agreements
   1. Only U.S. Treasury securities or federal agency securities are acceptable collateral. All securities underlying repurchase agreements must be delivered to the City's custodian bank versus payment or be handled under a properly executed tri-party repurchase agreement. The total market value of all collateral for each repurchase agreement must equal or exceed one hundred and two (102) percent of the total dollar value of the money invested by the City for the term of the investment. For any repurchase agreement with a term of more than one (1) day, the value of the underlying securities must be reviewed on an ongoing basis according to market conditions.

Market value must be calculated each time there is a substitution of collateral.

2. The City or its trustee shall have perfected first security interest under the Uniform Commercial Code in all securities subject to a repurchase agreement.

Investment Criteria: Criteria for selecting investments and the order of priority are:

A. Safety

The safety and risk associated with an investment refers to the potential loss of principal, interest or a combination of these amounts. The City only operates in those investments that are considered very safe.

B. Liquidity

This refers to the ability to convert an investment into cash at any moment in time with a minimal chance of losing some portion of principal or interest. Liquidity is an important investment quality when there is an occasional need for funds. The potential fluctuations in market value and the expected future availability of reasonable bids in the market are to be important considerations when selecting an investment.

C. Yield

Yield is the potential dollar earnings an investment can provide and sometimes is described as the rate of return.

Diversification: The City will diversify the use of investment instruments to avoid incurring unreasonable risks inherent in over-investing in specific instruments, or individual financial institutions. In no case, without prior notification and approval from the City Council, shall the amount invested in one entity at the time of purchase exceed 5% of the total portfolio, with the following exceptions:

- U.S. Federal Government Agency Obligations of one specific entity cannot exceed 25% of the maturity value of the portfolio at the time of purchase.
- U.S. Treasury Obligations (Treasury Bills, Treasury Strips, Bonds, Notes) directly backed by the full faith and credit of the United States for payment of principal and interest shall not be subject to a maximum percentage of the portfolio.
- Approved State and County investment pools together cannot exceed 60% of the maturity value of the portfolio at the time of purchase, and no more than 40% of the maturity value at the time of purchase can be deposited in any one particular pool.

Investment Pools: The City Treasurer, Administrative Services Director and City Council have determined that use of investment pools is a practical investment option. The City will utilize guidelines established by the California Municipal Treasurers Association and California Society of Municipal Finance Officers to ensure the safety of investment pools which includes a thorough investigation of the pool/fund prior to investing, and on a continual basis. There shall be a questionnaire developed which will answer the following general questions:

- A description of eligible investment securities, and a written statement of investment policy and objectives.
- A description of interest calculations and how it is distributed, and how gains and

losses are treated.

- A description of how the securities are safeguarded (including the settlement processes), and how often the securities are priced and the program audited.
- A description of who may invest in the program, how often, what size deposit and withdrawal are allowed.
- A schedule for receiving statements and portfolio listings.
- Are reserves, retained earnings, etc. utilized by the pool/fund?
- A fee schedule, and when and how is it assessed.
- Is the pool/fund eligible for bond proceeds and/or will it accept such proceeds?

Maturity Limitations: Every investment instrument purchased must have a term remaining to maturity of less than five years, unless the investment is for the Senior Low Cost Housing Subsidy Program, bond proceeds for the Reserve Fund, funded/capitalized interest fund; or the City Council has granted express authority to make that investment, either specifically or as part of an investment program approved by the City Council no more than three months prior to the investment. When possible, a minimum of 25% of the portfolio should be in maturities of one year or less.

Safekeeping and Custody: All security transactions, including collateral for repurchase agreements, entered into by the City shall be conducted on a delivery-versus-payment (DVP) basis which ensure that securities are deposited in an eligible financial institution prior to the release of funds. Securities shall be held by a third-party custodian designated by the City and evidenced by safekeeping receipts with a written custodial agreement. The only exception to the foregoing shall be depository accounts and securities purchases made with: LAIF, direct time certificates of deposit and money market mutual funds, since the purchased securities are not deliverable. Settlement instructions sent to the safekeeping agent shall require authorization.

Monthly trust statements are reconciled to the Investment Reports by the City's Accountant. The City's Accountant performs reconciliation of the monthly bank statements. The periodic review of the investment portfolio, including investment types, purchase price, market values, maturity dates, and investment yields as well as conformance to the stated investment policy will be performed by the Investment Advisory Committee.

Qualified Broker/Dealers: For those investments managed directly by the City, the City shall maintain a listing of broker/dealers that are approved by the Investment Advisory Committee for investment purposes. All broker/dealers who desire to bid for investment transactions must supply the City with the following information; a completed broker/dealer questionnaire, audited financial statements, proof of National Association of Security Dealers' certification, trading resolution, proof of California registration, and certification of having read the City of Brea's investment policy.

The Investment Advisory Committee will conduct an annual review of the qualified broker/dealers. The decision to add or subtract from the authorized list of broker/dealers will be based on many factors to include, but not limited to, products offered, service levels, references, etc. No single factor will determine the Committee's final decision. A current audited financial statement is required to be on file for each broker/dealer with which the City of Brea invests. The City's authorized brokers/dealers shall provide written

confirmation of having read and understood the City's investment policy and that all investments recommended by them will be suitable for the City of Brea.

Selection of broker/dealers used by an external investment adviser retained by the City will be at the sole discretion of the adviser. Where possible, transactions with broker/dealers shall be selected on a competitive basis and their bid or offering prices shall be recorded. If there is no other readily available competitive offering, best efforts will be made to document quotations for comparable or alternative securities. When purchasing original issue instrumentality securities, no competitive offerings will be required as all dealers in the selling group offer those securities at the same original issue price.

Monitoring and Adjusting the Portfolio: The City Treasurer and Administrative Services Director will routinely monitor the contents, performance and risk profile of the investment portfolio, the investment alternatives, and the relative values of competing investment instruments and will adjust the portfolio accordingly based on the approved Statement of Investment Policy on a quarterly basis. The City Council shall also bear a responsibility for monitoring the implementation of this policy and the safeguarding of the City's Treasury.

Performance Standards: The investment portfolio shall be designed to attain a market-average rate of return throughout budgetary and economic cycles, taking into account the City's risk constraints, the cash flow characteristics of the portfolio, and state and local laws, ordinances or resolutions that restrict investments.

The Administrative Services Director shall monitor and evaluate the portfolio's performance relative to market benchmark, which will be included in the monthly report of investments. The Treasurer and Administrative Services Director shall select an appropriate, readily available index to use as a market benchmark.

Bond Funds/Arbitrage: The U.S. Tax Reform Act of 1986 requires the City to perform annual arbitrage calculations and rebate excess earnings from investments of proceeds of bond issues sold after the effective date of this law to the U.S. Treasury. This arbitrage calculation may be contracted with an outside source to provide the necessary technical assistance to comply with this regulation. Funds subject to the 1986 Tax Reform Act will be kept segregated from other funds and records will be kept in a fashion to facilitate the calculations. The City's investment position relative to the new arbitrage restrictions is to continue pursuing the maximum yield on applicable investments while ensuring the safety of capital and liquidity. It is a fiscally sound position to continue maximization of yield and to rebate excess earnings, if necessary.

Review/or Modification: The Investment Advisory Committee shall be responsible for reviewing and recommending modifications to the Statement of Investment Policy and submitting it to the City Council for approval on an annual basis. However, the City Treasurer and Administrative Services Director may, at any time, further restrict the investments approved for purchase as deemed appropriate.

Internal Controls: The City Treasurer and Administrative Services Director shall organize the investment function so that specific responsibility for the performance of duties is assigned with a clear line of authority and reporting. The functions of authorizing,

executing and recording transactions, custody of investments and performing reconciliation's will be handled by separate persons to reduce the risk that anyone person is in a position to conceal errors or fraud in the normal course of duty. While no internal control system, however elaborate, can guarantee absolute assurance that the City's assets are safeguarded, it is the intent of the City's internal control system to provide reasonable assurance that management of the investment function meets the City's objectives. These internal controls shall be reviewed annually by the independent auditor who shall review and comment upon the content of this policy, the effectiveness of its implementation and applicable management controls with regard to its implementation and the safeguarding of the City's Treasury funds.

Investment Advisory Committee: An Investment Advisory Committee ("Committee") is established to review and make recommendations on the Investment Policy and investment strategy of the City of Brea/Successor Agency to the Brea Redevelopment Agency and to strengthen the internal control of the management of the City's funds. The following are the duties and responsibilities of the Committee:

A. Purpose
   1. To review and make recommendations on investment policy and investment strategy of the City of Brea/Successor Agency to the Brea Redevelopment Agency.
   2. To review the City's investments on a periodic basis and to recommend any exceptions and/or changes to the policy, to the City Council for review and approval.

B. Composition of Committee
   1. City Treasurer
   2. City Council Member, who serves as the Chair (selected by the City Council)
   3. Administrative Services Director
   4. Revenue and Budget Manager
   5. Three (3) Brea Citizens (selected by the City Council with the City Treasurer as subcommittee members)

C. Functions
   1. Annually (or as needed)
      a. To review and approve Statement of Investment Policy
      b. To review the financial condition and registrations of qualified broker/dealers (Only required when investments are managed by the City)

   2. Monthly or Quarterly
      a. To review the City's investments
      b. To recommend any modifications to the Investment Policy
      c. To develop and carry out the ongoing investment strategy in accordance with the Investment Policy
      d. To provide a status report at a study session of the City Council as requested

The function of the Committee is not to inhibit the daily operation of the Administrative Services Department, but to provide policy guidelines within which to work on a day-to-day basis. By this, it is meant that each individual trade need not be approved by the Committee at the time it is transacted provided that it falls within the scope of the Statement of Investment Policy.

Disclosure: Members of the Committee shall be required to comply with the Fair Political Practices Act reporting requirements (Form 700) on an annual basis and submit filings to the City Clerk's Office.

SEGREGATION OF RESPONSIBILITIES
(External)

FUNCTION	RESPONSIBILITY
Develop formal Statement of Investment Policy	Administrative Services Director Revenue and Budget Manager
Recommend modifications to Investment Policy	City Treasurer Administrative Services Director Revenue and Budget Manager
Review formal Statement of Investment Policy and recommend a Council action	City Treasurer Investment Advisory Committee
Adopt formal Statement of Investment Policy	City Council
Select investments	Outside Investment Manager
Execute investment transactions and fax or email completed trade information to City	Outside Investment Manager
Review transactions for compliance with investment policy	City Treasurer Administrative Services Director or Revenue and Budget Manager
Investment verification (match broker confirmation to trade information provided by outside Investment Manager to City investment records)	Administrative Services Director or Revenue and Budget Manager
Record investment transactions into City's accounting records	City Accountant
Reconcile investment records to accounting records and bank statements and report any variances to Administrative Services Director and City Treasurer	City Accountant
Security	All investment securities will be held in safekeeping in the trust department of the City's Depository Bank, or other third party custodian as designated by the City Treasurer or Administrative Services Director.

SEGREGATION OF RESPONSIBILITIES
(Internal)

FUNCTION	RESPONSIBILITY
Develop formal Statement of Investment Policy	City Treasurer Administrative Services Director Revenue and Budget Manager
Recommend modifications to Statement of Investment Policy	City Treasurer Administrative Services Director Revenue and Budget Manager Investment Advisory Committee
Review formal Statement of Investment Policy and recommend City Council action	Investment Advisory Committee
Annually review and adopt a formal Statement of Investment Policy	City Council
Select investments	Administrative Services Director or Revenue and Budget Manager
Approve transactions	Administrative Services Director
Execute investment transactions	Administrative Services Director
Investment verification (match broker confirmation to City investment records)	Administrative Services Director or Revenue and Budget Manager
Record investment transactions into City's accounting records	City Accountant
Reconcile investment records to accounting records and bank statements and report any variances to the Administrative Services Director	City Accountant
Security	All investment securities will be held in safekeeping in the trust department of the City's Depository Bank, or other third party custodian as designated by the City Treasurer or Administrative Services Director

GLOSSARY OF INVESTMENTS TERMS

AGENCIES: Shorthand market terminology for any obligation issued by *a government-sponsored entity (GSE),* or a *federally related institution*. Most obligations of GSEs are not guaranteed by the full faith and credit of the US government. Examples are:

FFCB: The Federal Farm Credit Bank System provides credit and liquidity in the agricultural industry. FFCB issues discount notes and bonds.

FHLB: The Federal Home Loan Bank provides credit and liquidity in the housing market. FHLB issues discount notes and bonds.

FHLMC: Like FHLB, the Federal Home Loan Mortgage Corporation provides credit and liquidity in the housing market. FHLMC, also called "Freddie MacFreddieMac" issues discount notes, bonds and mortgage pass-through securities.

FNMA: Like FHLB and Freddie MacFreddieMac, the Federal National Mortgage Association was established to provide credit and liquidity in the housing market. FNMA, also known as "Fannie MaeFannieMae," issues discount notes, bonds and mortgage pass-through securities.

GNMA: The Government National Mortgage Association, known as "Ginnie MaeGinnieMae," issues mortgage pass-through securities, which are guaranteed by the full faith and credit of the US Government.

PEFCO: The Private Export Funding Corporation assists exporters. Obligations of PEFCO are not guaranteed by the full faith and credit of the US government.

TVA: The Tennessee Valley Authority provides flood control and power and promotes development in portions of the Tennessee, Ohio, and Mississippi River valleys. TVA currently issues discount notes and bonds.

ASSET BACKED SECURITIES: Securities supported by pools of installment loans or leases or by pools of revolving lines of credit.

AVERAGE LIFE: In mortgage-related investments, including CMOs, the average time to expected receipt of principal payments, weighted by the amount of principal expected.

BANKER'S ACCEPTANCE: A money market instrument created to facilitate international trade transactions. It is highly liquid and safe because the risk of the trade transaction is transferred to the bank which "accepts" the obligation to pay the investor.

BENCHMARK: A comparison security or portfolio. A performance benchmark is a partial market index, which reflects the mix of securities allowed under a specific investment policy.

BROKER: A broker brings buyers and sellers together for a transaction for which the broker receives a commission. A broker does not sell securities from his own position.

CALIFORNIA MUNICIPAL TREASURERS ASSOCIATION (CMTA): Is the professional society of active public treasurers of California counties, cities and special districts. It sets ethical standards for the treasury profession in state and local governments in California.

CALIFORNIA SOCIETY OF MUNICIPAL FINANCE OFFICERS (CSMFO): Is a professional association of state, county and local government finance officers in

California. CSMFO is the statewide organization serving all of California municipal finance professionals, an affiliate of the nationwide Government Finance Officers Association (GFOA).

CALLABLE: A callable security gives the issuer the option to call it from the investor prior to its maturity. The main cause of a call is a decline in interest rates. If interest rates decline, the issuer will likely call its current securities and reissue them at a lower rate of interest.

CERTIFICATE OF DEPOSIT (CD): A time deposit with a specific maturity evidenced by a certificate.

CERTIFICATE OF DEPOSIT ACCOUNT REGISTRY SYSTEM (CDARS): A private placement service that allows local agencies to purchase more than $250,000 in CDs from a single financial institution (must be a participating institution of CDARS) while still maintaining FDIC insurance coverage. CDARS is currently the only entity providing this service. CDARS facilitates the trading of deposits between the California institution and other participating institutions in amounts that are less than $250,000 each, so that FDIC coverage is maintained.

COLLATERAL: COLLATERAL. Securities or cash pledged by a borrower to secure repayment of a loan or repurchase agreement. Also, securities pledged by a financial institution to secure deposits of public monies.

COLLATERALIZED BANK DEPOSIT: A bank deposit that is collateralized at least 100% (principal plus interest to maturity). The deposit is collateralized using assets set aside by the issuer such as Treasury securities or other qualified collateral to secure the deposit in excess of the limit covered by the Federal Deposit Insurance Corporation.

COLLATERALIZED MORTGAGE OBLIGATION (CMO): Classes of bonds that redistribute the cash flows of mortgage securities (and whole loans) to create securities that have different levels of prepayment risk, as compared to the underlying mortgage securities.

COLLATERIALIZED TIME DEPOSIT: Time deposits that are collateralized at least 100% (principal plus interest to maturity). These instruments are collateralized using assets set aside by the issuer such as Treasury securities or other qualified collateral to secure the deposit in excess of the limit covered by the Federal Deposit Insurance Corporation.
PAPER: The short-term unsecured debt of corporations.

COUPON: The rate of return at which interest is paid on a bond.

CREDIT RISK: The risk that principal and/or interest on an investment will not be paid in a timely manner due to changes in the condition of the issuer.
A dealer acts as a principal in security transactions, selling securities from and buying securities for his own position.

DEBENTURE: A bond secured only by the general credit of the issuer.
VS. PAYMENT (DVP): A securities industry procedure whereby payment for a security must be made at the time the security is delivered to the purchaser's agent.

DERIVATIVE: Any security that has principal and/or interest payments which are subject

to uncertainty (but not for reasons of default or credit risk) as to timing and/or amount, or any security which represents a component of another security which has been separated from other components ("Stripped" coupons and principal). A derivative is also defined as a financial instrument the value of which is totally or partially derived from the value of another instrument, interest rate, or index.

The difference between the par value of a bond and the cost of the bond, when the cost is below par. Some short-term securities, such as T-bills and banker's acceptances, are known as discount securities. They sell at a discount from par and return the par value to the investor at maturity without additional interest. Other securities, which have fixed coupons, trade at a discount when the coupon rate is lower than the current market rate for securities of that maturity and/or quality.

DISCOUNT SECURITIES: Non-interest bearing money market instruments that are issued a discount and redeemed at maturity for full face value *(e.g., U.S. Treasury Bills.)*

DIVERSIFICATION: Dividing investment funds among a variety of investments to avoid excessive exposure to any one source of risk.

DURATION: The weighted average time to maturity of a bond where the weights are the present values of the future cash flows. Duration measures the price sensitivity of a security to changes interest rates.

FEDERAL CREDIT AGENCIES: Agencies of the Federal government set up to supply credit to various classes of institutions and individuals, *e.g.*, S&L's, small business firms, students, farmers, farm cooperatives, and exporters.

FEDERAL DEPOSIT INSTURANCE CORPORATION (FDIC): The Federal Deposit Insurance Corporation (FDIC) is an independent federal agency insuring deposits in U.S. banks and thrifts in the event of bank failures. The FDIC was created in 1933 to maintain public confidence and encourage stability in the financial system through the promotion of sound banking practices.

FEDERAL FUNDS RATE: The rate of interest at which Fed funds are traded. This rate is currently pegged by the Federal Reserve through open-market operations.

FEDERAL HOME LOAN BANKS (FHLB): Government sponsored wholesale banks (currently 12 regional banks), which lend funds and provide correspondent banking services to member commercial banks, thrift institutions, credit unions and insurance companies. The mission of the FHLBs is to liquefy the housing related assets of its members who must purchase stock in their district Bank.

FEDERAL NATIONAL MORTGAGE ASSOCIATION (FNMA): FNMA, like GNMA was chartered under the Federal National Mortgage Association Act in 1938. FNMA is a federal corporation working under the auspices of the Department of Housing and Urban Development (HUD). It is the largest single provider of residential mortgage funds in the United States. Fannie Mae, as the corporation is called, is a private stockholder-owned corporation. The corporation's purchases include a variety of adjustable mortgages and second loans, in addition to fixed-rate mortgages. FNMA's securities are also highly liquid and are widely accepted. FNMA assumes and guarantees that all security holders will receive timely payment of principal and interest.

FEDERAL OPEN MARKET COMMITTEE (FOMC): Consists of seven members of the Federal Reserve Board and five of the twelve Federal Reserve Bank Presidents. The President of the New York Federal Reserve Bank is a permanent member, while the other Presidents serve on a rotating basis. The Committee periodically meets to set Federal Reserve guidelines regarding purchases and sales of Government Securities in the open market as a means of influencing the volume of bank credit and money.

FEDERAL RESERVE SYSTEM: The central bank of the United States created by Congress and consisting of a seven member Board of Governors in Washington, D.C., 12 regional banks and about 5,700 commercial banks that are members of the system.

GOVERNMENT NATIONAL MORTGAGE ASSOCIATION (GNMA or Ginnie Mae): Securities influencing the volume of bank credit guaranteed by GNMA and issued by mortgage bankers, commercial banks, savings and loan associations, and other institutions. Security holder is protected by full faith and credit of the U.S. Government. Ginnie Mae securities are backed by the FHA, VA or FHA mortgages. The term “pass-throughs” is often used to describe Ginnie Maes.

INTEREST: The amount earned while owning a debt security, generally calculated as a percentage of the principal amount.

INVERSE FLOATER: A bond or other type of debt whose coupon rate has an inverse relationship to a benchmark rate. An inverse floater adjusts its coupon payment as the interest rate changes. This investment is prohibited under in the City’s and Successor Agency to the Brea Redevelopment Agency Investment Policy.

FEDERALLY INSURED TIME DEPOSIT: A time deposit is an interest-bearing bank deposit account that has a specified date of maturity, such as a certificate of deposit (CD). These deposits are limited to funds insured in accordance with FDIC insurance deposit limits.

LEVERAGE: Borrowing funds in order to invest in securities that have the potential to pay earnings at a rate higher than the cost of borrowing.

LIQUIDITY: The speed and ease with which an asset can be converted to cash.

LOCAL AGENCY INVESTMENT FUND (LAIF): A voluntary investment fund open to government entities and certain non-profit organizations in California that is managed by the State Treasurer’s Office.

POOL: Investment pools that range from the State Treasurer’s Office Local Agency Investment Fund (LAIF) to county pools, to Joint Powers Authorities (JPAs). These funds are not subject to the same SEC rules applicable to money market mutual funds.

MAKE WHOLE CALL: A type of call provision on a bond that allows the issuer to pay off the remaining debt early. Unlike a call option, with a make whole call provision, the issuer makes a lump sum payment that equals the net present value (NPV) of future coupon payments that will not be paid because of the call. With this type of call, an investor is compensated, or "made whole."

MARGIN: The difference between the market value of a security and the loan a broker makes using that security as collateral.

MARKET RISK: The risk that the value of securities will fluctuate with changes in overall market conditions or interest rates.

MARKET VALUE: The price at which a security can be traded.

MASTER REPURCHASE AGREEMENT: A written contract covering all future transactions between the parties to repurchase—reverse repurchase agreements that establishes each party's rights in the transactions. A master agreement will often specify, among other things, the right of the buyer-lender to liquidate the underlying securities in the event of default by the seller borrower.

MATURITY: The final date upon which the principal of a security becomes due and payable.

MEDIUM TERM NOTES: Unsecured, investment-grade senior debt securities of major corporations which are sold in relatively small amounts on either a continuous or an intermittent basis. MTNs are highly flexible debt instruments that can be structured to respond to market opportunities or to investor preferences.

MODIFIED DURATION: The percent change in price for a 100-basis point change in yields. Modified duration is the best single measure of a portfolio's or security's exposure to market risk.
MARKET: The market in which short-term debt instruments (T-bills, discount notes, commercial paper, and banker's acceptances) are issued and traded.

MONEY MARKET MUTUAL FUND: A mutual fund that invests exclusively in short-term securities. Examples of investments in money market funds are certificates of deposit and U.S. Treasury securities. Money market funds attempt to keep their net asset values at $1 per share.

MORTGAGE PASS-THROUGH SECURITIES: A securitized participation in the interest and principal cash flows from a specified pool of mortgages. Principal and interest payments made on the mortgages are passed through to the holder of the security.

MUNICIPAL SECURITIES: Securities issued by state and local agencies to finance capital and operating expenses.

MUTUAL FUND: An entity which pools the funds of investors and invests those funds in a set of securities which is specifically defined in the fund's prospectus. Mutual funds can be invested in various types of domestic and/or international stocks, bonds, and money market instruments, as set forth in the individual fund's prospectus. For most large, institutional investors, the costs associated with investing in mutual funds are higher than the investor can obtain through an individually managed portfolio.

NATIONALLY RECOGNIZED STATISTICAL RATING ORGANIZATION (NRSRO): A credit rating agency that the Securities and Exchange Commission in the United States uses for regulatory purposes. Credit rating agencies provide assessments of an investment's risk. The issuers of investments, especially debt securities, pay credit rating

agencies to provide them with ratings. The three most prominent NRSROs are Fitch, S&P, and Moody's.

NEGOTIABLE CERTIFICATE OF DEPOSIT (CD):). A short-term debt instrument that pays interest and is issued by a bank, savings or federal association, state or federal credit union, or state-licensed branch of a foreign bank. Negotiable CDs are traded in a secondary market and are payable upon order to the bearer or initial depositor (investor).

OFFER: The price asked by a seller of securities. (When you are buying securities, you ask for an offer.) See Asked and Bid.

OPEN MARKET OPERATIONS: Purchases and sales of government and certain other securities in the open market by the New York Federal Reserve Bank as directed by the FOMC in order to influence the volume of money and credit in the economy. Purchases inject reserves into the bank system and stimulate growth of money and credit; sales have the opposite effect. Open market operations are the Federal Reserve's most important and most flexible monetary policy tool.

PASSBOOK SAVINGS ACCOUNT: A savings account in which deposits and withdrawals are recorded in the depositor's passbook.

PASS-THOUGH SECURITY: A pool of fixed income securities backed by a package of assets (i.e. mortgages) where the holder receives the principal and interest payments.

PORTFOLIO: Collection of securities held by an investor.

PRIMARY DEALER: A financial institution (1) that is a trading counterparty with the Federal Reserve in its execution of market operations to carry out U.S. monetary policy, and (2) that participates for statistical reporting purposes in compiling data on activity in the U.S. Government securities market.

PRINCIPAL: The face value or par value of an investment.

PRUDENT INVESTOR STANDARD: Is a standard defined under State Government Code Section 53600.3 that states when investing, reinvesting, purchasing, acquiring, exchanging, selling, or managing public funds, a trustee shall act with care, skill, prudence, and diligence under the circumstances then prevailing, including, but not limited to, the general economic conditions and the anticipated needs of the City, that a prudent person acting in a like capacity and familiarity with those matters would use in the conduct of funds of a like character and with like aims, to safeguard the principal and maintain the liquidity needs of the City/Successor Agency to the Brea Redevelopment Agency. Within the limitations of this section and considering individual investments as part of an overall strategy, investments may be acquired as authorized by law.

PRUDENT PERSON (PRUDENT INVESTOR) RULE: A standard of responsibility which applies to fiduciaries. In California, the rule is stated as "Investments shall be managed with the care, skill, prudence and diligence, under the circumstances then prevailing, that a prudent person, acting in a like capacity and familiar with such matters, would use in the conduct of an enterprise of like character and with like aims to accomplish similar purposes."

QUALIFIED PUBLIC DEPOSITORIES: A financial institution which does not claim exemption from the payment of any sales or compensating use or ad valorem taxes under the laws of this state, which has segregated for the benefit of the commission eligible collateral having a value of not less than its maximum liability and which has been approved by the Public Deposit Protection Commission to hold public deposits.

RATE OF RETURN: The yield obtainable on a security based on its purchase price or its current market price. This may be the amortized yield to maturity on a bond the current income return.

REPURCHASE AGREEMENT: Short-term purchases of securities with a simultaneous agreement to sell the securities back at a higher price. From the seller's point of view, the same transaction is a reverse repurchase agreement.

REVERSE REPURCHASE AGREEMENT (REVERSE REPO): A reverse-repurchase agreement (reverse repo) involves an investor borrowing cash from a financial institution in exchange for securities. The investor agrees to repurchase the securities at a specified date for the same cash value plus an agreed upon interest rate. Although the transaction is similar to a repo, the purpose of entering into a reverse repo is quite different. While a repo is a straightforward investment of public funds, the reverse repo is a borrowing.

SAFEKEEPING: A service to bank customers whereby securities are held by the bank in the customer's name.

SECONDARY MARKET: A market made for the purchase and sale of outstanding issues following the initial distribution.

SECURITIES AND SECURITIES AND EXCHANGE COMMISSION (SEC): The U.S. Securities and Exchange Commission (SEC) is an independent federal government agency responsible for protecting investors, maintaining fair and orderly functioning of securities markets and facilitating capital formation. It was created by Congress in 1934 as the first federal regulator of securities markets. The SEC promotes full public disclosure, protects investors against fraudulent and manipulative practices in the market, and monitors corporate takeover actions in the United States.

SECURITIES AND EXCHANGE COMMISSION (SEC) RULE 15C315c3-1: An SEC rule setting capital requirements for brokers and dealers. Under Rule 15c3-1, a broker or dealer must have sufficient liquidity in order to cover the most pressing obligations. This is defined as having a certain amount of liquidity as a percentage of the broker/dealer's total obligations. If the percentage falls below a certain point, the broker or dealer may not be allowed to take on new clients and may have restrictions placed on dealings with current client.

STRUCTURED NOTE: A complex, fixed income instrument, which pays interest, based on a formula tied to other interest rates, commodities or indices. Examples include inverse floating rate notes which have coupons that increase when other interest rates are falling, and which fall when other interest rates are rising, and "dual index floaters," which pay interest based on the relationship between two other interest rates - for example, the yield on the ten-year Treasury note minus the Libor rate. Issuers of such notes lock in a reduced cost of borrowing by purchasing interest rate swap agreements.

SUPRANATURAL: A Supranational is a multi-national organization whereby member states transcend national boundaries or interests to share in the decision making to promote economic development in the member countries.

TOTAL RATE OF RETURN: A measure of a portfolio's performance over time. It is the internal rate of return, which equates the beginning value of the portfolio with the ending value; it includes interest earnings, realized and unrealized gains, and losses in the portfolio.

U.S. TREASURY OBLIGATIONS: Securities issued by the U.S. Treasury and backed by the full faith and credit of the United States. Treasuries are considered to have no credit risk and are the benchmark for interest rates on all other securities in the US and overseas. The Treasury issues both discounted securities and fixed coupon notes and bonds.

All securities issued with initial maturities of one year or less are issued as discounted instruments and are called Treasury bills. The Treasury currently issues three- and six-month T-bills at regular weekly auctions. It also issues "cash management" bills as needed to smooth out cash flows.

All securities issued with initial maturities of two to ten years are called Treasury notes and pay interest semi-annually.

TREASURY BONDS: All securities issued with initial maturities greater than ten years are called Treasury bonds. Like Treasury notes, they pay interest semi-annually.

UNIFORM NET CAPITAL RULE: Securities and Exchange Commission requirement that member firms as well as nonmember broker-dealers in securities maintain a maximum ratio of indebtedness to liquid capital of 15 to 1; also called net capital rule and net capital ratio. Indebtedness covers all money owed to a firm, including margin loans and commitments to purchase securities, one reason new public issues are spread among members of underwriting syndicates. Liquid capital includes cash and assets easily converted into cash.

YIELD TO MATURITY: The annualized internal rate of return on an investment which equates the expected cash flows from the investment to its cost.

City Of Brea / Successor Agency to the Brea Redevelopment Agency

FINAL

STATEMENT OF INVESTMENT POLICY

August 17, 2021

Deleted: DRAFT

Deleted: 8

Deleted: 0

Purpose: This statement is intended to provide a guideline for the prudent investment of funds and to outline the policies for maximizing the efficiency of the City of Brea and Successor Agency to the Brea Redevelopment Agency ("City") cash management system. The ultimate goal is to enhance the economic status of the City while protecting its pooled funds. This investment policy has been prepared so as to be in conformance with all pertinent existing laws of the State of California for General Law cities.

Objective: The cash management system of the City is designed to accurately monitor and forecast expenditures and revenues, thus enabling the City to invest funds to the fullest extent possible. The City attempts to obtain a market rate of return without incurring undue risk to principal. The objectives of such investments are: 1) preserve capital, 2) maintain financial flexibility/liquidity, and 3) obtain a competitive rate of return on the City's investments.

Scope: This investment policy applies to the decisions and activities of the City with regard to investing the financial assets of all funds, including the following: General Fund, Special Revenue Funds, Assessment Funds, Enterprise Funds, Internal Service Funds, Capital Projects Funds, Debt Service Funds, Reserve Funds, Trust and Agency Funds, and any other funds that may be created from time to time. This policy does not apply retiree health care savings/trust/plan(s) or deferred compensation plans.

Investment Responsibility: Investment decisions of the City funds are the responsibility of the City Treasurer and/or Administrative Services Director, and shall comply with the Investment Policy of the City. These responsibilities include the authority to open accounts with banks, brokers and dealers, establish safekeeping accounts or other arrangements for the custody of securities and to execute such documents as may be necessary.

Those authorized to execute transactions for the City include the: 1) City Treasurer, 2) Administrative Services Director, 3) Financial Services Manager, and 4) those specifically deputized by the City Treasurer and Administrative Services Director with said authorization to be filed with the City Clerk. The City Treasurer and Administrative Services Director shall insure that an authorized person is available at all times to execute the City's investments. Investment managers, brokers and dealers are to be provided with a list of specified names of those persons authorized to execute transactions. The City Council may authorize the delegation of investments to an outside investment manager.

Deleted: Revenue and Budget

Reporting: The Administrative Services Director shall be responsible for reporting the status of investments to the City Council and City Manager on a monthly basis. These reports will disclose, at a minimum, the following information about the characteristics of the City's portfolio:

A. An asset listing showing par value, cost and accurate and complete market value of each security, type of investment, issuer, and interest rate.

B. Monthly transactions for the period.
C. A one-page summary report that shows:
    1. Average maturity of the portfolio and modified duration of the portfolio;
    2. Maturity distribution of the portfolio;
    3. Average portfolio credit quality; and,
    4. Time-weighted total rate of return for the portfolio for the prior one month, three months, twelve months, year to date, and since inception compared to the City's market benchmark returns for the same periods;
D. A statement of compliance with investment policy, including a schedule of any transactions or holdings which do not comply with this policy or with the California Government Code, including a justification for their presence in the portfolio and a timetable for resolution.
E. A statement that the City has adequate funds to meet its cash flow requirements for the next six months.

Reports are to be submitted to the City Council and City Manager by the 3rd City Council meeting following the end of the reporting month.

The Investment Advisory Committee will review the status of investments on a quarterly basis. These reports shall include the type of investment, institution, face amount, market value, book value, interest rate, date of maturity, compliance to the investment policy.

If the City has an outside Investment Manager, the Investment Manager shall periodically report on the activity and results of the funds being managed by the Investment Manager. Additionally, the Investment Manager shall notify the Investment Advisory Committee when investment portfolios demonstrate low performance, if any, which occurs between each periodic report.

Prudence: The standard of prudence to be applied by the City Treasurer, Administrative Services Director, Financial Services Manager, and those specifically deputized by the City Treasurer and Administrative Services Director with said authorization to be filed with the City Clerk shall be the "prudent investor" standard, as defined under Government Code Section 53600.3 which states, "When investing, reinvesting, purchasing, acquiring, exchanging, selling, or managing public funds, a trustee shall act with care, skill, prudence, and diligence under the circumstances then prevailing, including, but not limited to, the general economic conditions and the anticipated needs of the City, that a prudent person acting in a like capacity and familiarity with those matters would use in the conduct of funds of a like character and with like aims, to safeguard the principal and maintain the liquidity needs of the City/Successor Agency to the Brea Redevelopment Agency. Within the limitations of this section and considering individual investments as part of an overall strategy, investments may be acquired as authorized by law."

Deleted: Revenue and Budget

Ethics and Conflicts of Interest: Officers and employees involved in the City investment process shall refrain from personal business activity that could conflict with proper execution of the investment program or which could impair their ability to make impartial investment decisions. City employees and investment officials shall disclose any material financial interests in financial institutions that conduct business within the City, and they shall further disclose any personal financial/investment positions that could be related to the performance of the City's portfolio. City employees and officers shall refrain

from undertaking personal investment transactions with the same individual with whom business is conducted on behalf of the City.

Investment Instruments: Funds of the City may be invested in any instrument allowable under current legislation of the State of California (Government Code Section 53600 et sec.) so long as the investment is appropriate and consistent with this Investment Policy taking into consideration the City's investment objectives. Investment instruments may include:

- U.S. Treasury Obligations (Bills, Notes and Bonds)
- U.S. Government Agency Securities and Instrumentality's of Government Sponsored Corporations, including a maximum of 5% in callable bonds issued by such agencies
- Banker's Acceptances
- Commercial Paper
- Repurchase Agreements (requires a master repurchase agreement to be signed and on file with the bank or broker/dealer)
- Certificates of Deposit
- Negotiable Certificates of Deposit
- Passbook Savings Accounts
- Interest Bearing Checking Accounts
- Medium Term Corporate Notes
- Bank Money Market Accounts
- Local Agency Investment Fund (State Pool)
- County of Orange Investment Fund (County Pool)
- Other investments that are, or may become, legal investments through the State of California Government Code.

Provisions of Government Code Section 53601 shall be adhered to at all times. This includes, but is not limited to, the following restrictions:

- Bankers Acceptances cannot exceed 40% of the portfolio nor exceed 180 days;
- Commercial Paper cannot exceed 25% of the portfolio. Commercial Paper must be rated P-1 (Moody's), A-1 (Standard & Poor's) and cannot exceed 270 days;
- Money Market Funds cannot exceed 20% of the portfolio;
- Medium Term Corporate Notes cannot exceed 30% of the portfolio and must carry a minimum A rating;
- Pass-through securities including Collateralized Mortgage Obligations cannot exceed 20% of the portfolio.
    - Asset Backed Securities are limited to a maximum of 10% of the portfolio at time of purchase
        - Maximum maturity of 5 years
        - Asset Backed Security must be rated AA or higher
- Supranational Securities must be rated AA or higher, cannot exceed 15% of the portfolio and no more than 5% of portfolio per issuer. The maximum maturity cannot exceed 5 years.
- Additionally, the City will use the guidelines established by the joint committee of the California Municipal Treasurers Association and the California Society of Municipal Finance Officers as the basis for investing in government investment pools.

Commented [CM1]: Recommend updating maximum portfolio percentage to 40% to be in line with SB 998

Commented [MF2]: At the Investment Advisory Committee on June 26, 2021, the Committee recommended keeping the Commercial Paper Allocation at 25% of the portfolio

Deleted: Under a provision sunsetting on January 1, 2026, no more than 40% of the portfolio may be invested in Commercial Paper if the Agency's investment assets under management are greater than $100,000,000

For purposes of complying with legal investment limitations, the percentage references pertaining to the above refers to the maturity value of the portfolio at the time of purchase.

If a security owned by the City is downgraded to a level below the requirements of this policy, making the security ineligible for additional purchases, the following steps will be taken:

- Any actions taken related to the downgrade by the investment manager will be communicated to the City Council, the Investment Advisory Committee, City Treasurer and the Administrative Services Director within two (2) business days.

- If a decision is made to retain the security, the credit situation will be monitored and reported to the City Council.

Prohibited Investments: The City shall not invest any funds in derivatives, inverse floaters, range notes, or interest- only strips that are derived from a pool of mortgages. The City shall not invest any funds in any security that could result in a zero interest accrual if held to maturity.

However, the City is authorized to invest in securities that could result in zero or negative interest accrual if held to maturity if they are issued by or backed by the United States Government. Negative interest rate securities in United States Government securities will only be permitted in the portfolio in the event the United States Federal Reserve adopts a negative interest rate monetary policy framework. Notification to the City Council, the Investment Advisory Committee, the City Treasurer, and the Administrative Services Director will be given within two (2) business days when securities of this type are being added to the portfolio, this allows for full disclosure and understanding of the strategy given the market conditions.

Deleted: T

Deleted:

Deleted: that could result in zero or negative interest accrual if held to maturity

Commented [CM3]: Recommend adding language on zero or negative interest securities backed by US Government to be in line with the passing of SB 998

Collateralization: Collateralization shall be required on two types of investments: Certificates of deposit and repurchase (and reverse repurchase) agreements. A collateral agreement must be current and on file before any funds can be transferred for collateralized certificates of deposit.

Collateral shall be held by an independent third party with whom the City has a current written custodial agreement. A clearly marked evidence of ownership (safekeeping receipt) must be supplied to the City and retained. The right of collateral substitution is granted in accordance with the following requirements:

A. Certificates of Deposit
   1. Government securities used as collateral require one hundred and ten (110) percent of market value to the face amount of the deposit
   2. Promissory notes secured by first trust deeds used as collateral require one hundred and fifty (150) percent of market value to the face amount of the deposit
   3. Irrevocable letters of Credit issued by the Federal Home Loan Bank of San Francisco require one hundred and five (105) percent of market value to the face amount of the deposit

B. Repurchase and Reverse Repurchase Agreements

1. Only U.S. Treasury securities or federal agency securities are acceptable collateral. All securities underlying repurchase agreements must be delivered to the City's custodian bank versus payment or be handled under a properly executed tri-party repurchase agreement. The total market value of all collateral for each repurchase agreement must equal or exceed one hundred and two (102) percent of the total dollar value of the money invested by the City for the term of the investment. For any repurchase agreement with a term of more than one (1) day, the value of the underlying securities must be reviewed on an ongoing basis according to market conditions. Market value must be calculated each time there is a substitution of collateral.
2. The City or its trustee shall have perfected first security interest under the Uniform Commercial Code in all securities subject to a repurchase agreement.

Investment Criteria: Criteria for selecting investments and the order of priority are:

A. Safety

The safety and risk associated with an investment refers to the potential loss of principal, interest or a combination of these amounts. The City only operates in those investments that are considered very safe.

B. Liquidity

This refers to the ability to convert an investment into cash at any moment in time with a minimal chance of losing some portion of principal or interest. Liquidity is an important investment quality when there is an occasional need for funds. The potential fluctuations in market value and the expected future availability of reasonable bids in the market are to be important considerations when selecting an investment.

C. Yield

Yield is the potential dollar earnings an investment can provide and sometimes is described as the rate of return.

Diversification: The City will diversify the use of investment instruments to avoid incurring unreasonable risks inherent in over-investing in specific instruments, or individual financial institutions. In no case, without prior notification and approval from the City Council, shall the amount invested in one entity at the time of purchase exceed 5% of the total portfolio, with the following exceptions:

- U.S. Federal Government Agency Obligations of one specific entity cannot exceed 25% of the maturity value of the portfolio at the time of purchase.
- U.S. Treasury Obligations (Treasury Bills, Treasury Strips, Bonds, Notes) directly backed by the full faith and credit of the United States for payment of principal and interest shall not be subject to a maximum percentage of the portfolio.
- Approved State and County investment pools together cannot exceed 60% of the maturity value of the portfolio at the time of purchase, and no more than 40% of the maturity value at the time of purchase can be deposited in any one particular pool.

Investment Pools: The City Treasurer, Administrative Services Director and City Council

have determined that use of investment pools is a practical investment option. The City will utilize guidelines established by the California Municipal Treasurers Association and California Society of Municipal Finance Officers to ensure the safety of investment pools which includes a thorough investigation of the pool/fund prior to investing, and on a continual basis. There shall be a questionnaire developed which will answer the following general questions:

- A description of eligible investment securities, and a written statement of investment policy and objectives.
- A description of interest calculations and how it is distributed, and how gains and losses are treated.
- A description of how the securities are safeguarded (including the settlement processes), and how often the securities are priced and the program audited.
- A description of who may invest in the program, how often, what size deposit and withdrawal are allowed.
- A schedule for receiving statements and portfolio listings.
- Are reserves, retained earnings, etc. utilized by the pool/fund?
- A fee schedule, and when and how is it assessed.
- Is the pool/fund eligible for bond proceeds and/or will it accept such proceeds?

Maturity Limitations: Every investment instrument purchased must have a term remaining to maturity of less than five years, unless the investment is for the Senior Low Cost Housing Subsidy Program, bond proceeds for the Reserve Fund, funded/capitalized interest fund; or the City Council has granted express authority to make that investment, either specifically or as part of an investment program approved by the City Council no more than three months prior to the investment. When possible, a minimum of 25% of the portfolio should be in maturities of one year or less.

Safekeeping and Custody: All security transactions, including collateral for repurchase agreements, entered into by the City shall be conducted on a delivery-versus-payment (DVP) basis which ensure that securities are deposited in an eligible financial institution prior to the release of funds. Securities shall be held by a third-party custodian designated by the City and evidenced by safekeeping receipts with a written custodial agreement. The only exception to the foregoing shall be depository accounts and securities purchases made with: LAIF, direct time certificates of deposit and money market mutual funds, since the purchased securities are not deliverable. Settlement instructions sent to the safekeeping agent shall require authorization.

Monthly trust statements are reconciled to the Investment Reports by the City's Accountant. The City's Accountant performs reconciliation of the monthly bank statements. The periodic review of the investment portfolio, including investment types, purchase price, market values, maturity dates, and investment yields as well as conformance to the stated investment policy will be performed by the Investment Advisory Committee.

Qualified Broker/Dealers: For those investments managed directly by the City, the City shall maintain a listing of broker/dealers that are approved by the Investment Advisory Committee for investment purposes. All broker/dealers who desire to bid for investment transactions must supply the City with the following information; a completed broker/dealer

questionnaire, audited financial statements, proof of National Association of Security Dealers' certification, trading resolution, proof of California registration, and certification of having read the City of Brea's investment policy.

The Investment Advisory Committee will conduct an annual review of the qualified broker/dealers. The decision to add or subtract from the authorized list of broker/dealers will be based on many factors to include, but not limited to, products offered, service levels, references, etc. No single factor will determine the Committee's final decision. A current audited financial statement is required to be on file for each broker/dealer with which the City of Brea invests. The City's authorized brokers/dealers shall provide written confirmation of having read and understood the City's investment policy and that all investments recommended by them will be suitable for the City of Brea.

Selection of broker/dealers used by an external investment adviser retained by the City will be at the sole discretion of the adviser. Where possible, transactions with broker/dealers shall be selected on a competitive basis and their bid or offering prices shall be recorded. If there is no other readily available competitive offering, best efforts will be made to document quotations for comparable or alternative securities. When purchasing original issue instrumentality securities, no competitive offerings will be required as all dealers in the selling group offer those securities at the same original issue price.

Monitoring and Adjusting the Portfolio: The City Treasurer and Administrative Services Director will routinely monitor the contents, performance and risk profile of the investment portfolio, the investment alternatives, and the relative values of competing investment instruments and will adjust the portfolio accordingly based on the approved Statement of Investment Policy on a quarterly basis. The City Council shall also bear a responsibility for monitoring the implementation of this policy and the safeguarding of the City's Treasury.

Performance Standards: The investment portfolio shall be designed to attain a market-average rate of return throughout budgetary and economic cycles, taking into account the City's risk constraints, the cash flow characteristics of the portfolio, and state and local laws, ordinances or resolutions that restrict investments.

The Administrative Services Director shall monitor and evaluate the portfolio's performance relative to market benchmark, which will be included in the monthly report of investments. The Treasurer and Administrative Services Director shall select an appropriate, readily available index to use as a market benchmark.

Bond Funds/Arbitrage: The U.S. Tax Reform Act of 1986 requires the City to perform annual arbitrage calculations and rebate excess earnings from investments of proceeds of bond issues sold after the effective date of this law to the U.S. Treasury. This arbitrage calculation may be contracted with an outside source to provide the necessary technical assistance to comply with this regulation. Funds subject to the 1986 Tax Reform Act will be kept segregated from other funds and records will be kept in a fashion to facilitate the calculations. The City's investment position relative to the new arbitrage restrictions is to continue pursuing the maximum yield on applicable investments while ensuring the safety of capital and liquidity. It is a fiscally sound position to continue maximization of yield and to rebate excess earnings, if necessary.

Review/or Modification: The Investment Advisory Committee shall be responsible for reviewing and recommending modifications to the Statement of Investment Policy and submitting it to the City Council for approval on an annual basis. However, the City Treasurer and Administrative Services Director may, at any time, further restrict the investments approved for purchase as deemed appropriate.

Internal Controls: The City Treasurer and Administrative Services Director shall organize the investment function so that specific responsibility for the performance of duties is assigned with a clear line of authority and reporting. The functions of authorizing, executing and recording transactions, custody of investments and performing reconciliation's will be handled by separate persons to reduce the risk that anyone person is in a position to conceal errors or fraud in the normal course of duty. While no internal control system, however elaborate, can guarantee absolute assurance that the City's assets are safeguarded, it is the intent of the City's internal control system to provide reasonable assurance that management of the investment function meets the City's objectives. These internal controls shall be reviewed annually by the independent auditor who shall review and comment upon the content of this policy, the effectiveness of its implementation and applicable management controls with regard to its implementation and the safeguarding of the City's Treasury funds.

Investment Advisory Committee: An Investment Advisory Committee ("Committee") is established to review and make recommendations on the Investment Policy and investment strategy of the City of Brea/Successor Agency to the Brea Redevelopment Agency and to strengthen the internal control of the management of the City's funds. The following are the duties and responsibilities of the Committee:

A. Purpose
   1. To review and make recommendations on investment policy and investment strategy of the City of Brea/Successor Agency to the Brea Redevelopment Agency.
   2. To review the City's investments on a periodic basis and to recommend any exceptions and/or changes to the policy, to the City Council for review and approval.

B. Composition of Committee
   1. City Treasurer
   2. City Council Member, who serves as the Chair (selected by the City Council)
   3. Administrative Services Director
   4. Financial Services Manager
   5. Three (3) Brea Citizens (selected by the City Council with the City Treasurer as subcommittee members)

Deleted: Revenue and Budget Manager

C. Functions
   1. Annually (or as needed)
      a. To review and approve Statement of Investment Policy
      b. To review the financial condition and registrations of qualified broker/dealers (Only required when investments are managed by the City)

   2. Monthly or Quarterly
      a. To review the City's investments

b. To recommend any modifications to the Investment Policy
c. To develop and carry out the ongoing investment strategy in accordance with the Investment Policy
d. To provide a status report at a study session of the City Council as requested

The function of the Committee is not to inhibit the daily operation of the Administrative Services Department, but to provide policy guidelines within which to work on a day-to-day basis. By this, it is meant that each individual trade need not be approved by the Committee at the time it is transacted provided that it falls within the scope of the Statement of Investment Policy.

Disclosure: Members of the Committee shall be required to comply with the Fair Political Practices Act reporting requirements (Form 700) on an annual basis and submit filings to the City Clerk's Office.

SEGREGATION OF RESPONSIBILITIES
(External)

FUNCTION	RESPONSIBILITY
Develop formal Statement of Investment Policy	Administrative Services Director Financial Services Manager
Recommend modifications to Investment Policy	City Treasurer Administrative Services Director Financial Services Manager
Review formal Statement of Investment Policy and recommend a Council action	City Treasurer Investment Advisory Committee
Adopt formal Statement of Investment Policy	City Council
Select investments	Outside Investment Manager
Execute investment transactions and fax or email completed trade information to City	Outside Investment Manager
Review transactions for compliance with investment policy	City Treasurer Administrative Services Director or Financial Services Manager
Investment verification (match broker confirmation to trade information provided by outside Investment Manager to City investment records)	Administrative Services Director or Financial Services Manager
Record investment transactions into City's accounting records	City Accountant
Reconcile investment records to accounting records and bank statements and report any variances to Administrative Services Director and City Treasurer	City Accountant
Security	All investment securities will be held in safekeeping in the trust department of the City's Depository Bank, or other third party custodian as designated by the City Treasurer or Administrative Services Director.

Deleted: ¶
Revenue and Budget Manager

Deleted: Revenue and Budget Manager

Deleted: ¶

Deleted: Revenue and Budget Manager

Deleted: Revenue and Budget Manager

SEGREGATION OF RESPONSIBILITIES
(Internal)

FUNCTION	RESPONSIBILITY
Develop formal Statement of Investment Policy	City Treasurer Administrative Services Director Financial Services Manager
Recommend modifications to Statement of Investment Policy	City Treasurer Administrative Services Director Financial Services Manager Investment Advisory Committee
Review formal Statement of Investment Policy and recommend City Council action	Investment Advisory Committee
Annually review and adopt a formal Statement of Investment Policy	City Council
Select investments	Administrative Services Director or Financial Services Manager
Approve transactions	Administrative Services Director
Execute investment transactions	Administrative Services Director
Investment verification (match broker confirmation to City investment records)	Administrative Services Director or Financial Services Manager
Record investment transactions into City's accounting records	City Accountant
Reconcile investment records to accounting records and bank statements and report any variances to the Administrative Services Director	City Accountant
Security	All investment securities will be held in safekeeping in the trust department of the City's Depository Bank, or other third party custodian as designated by the City Treasurer or Administrative Services Director

Deleted: Revenue and Budget Manager

Deleted: Revenue and Budget Manager

Deleted:

Deleted: Revenue and Budget Manager

Deleted: Revenue and Budget Manager

GLOSSARY OF INVESTMENTS TERMS

AGENCIES: Shorthand market terminology for any obligation issued by *a government-sponsored entity (GSE),* or a *federally related institution*. Most obligations of GSEs are not guaranteed by the full faith and credit of the US government. Examples are:

FFCB: The Federal Farm Credit Bank System provides credit and liquidity in the agricultural industry. FFCB issues discount notes and bonds.

FHLB: The Federal Home Loan Bank provides credit and liquidity in the housing market. FHLB issues discount notes and bonds.

FHLMC: Like FHLB, the Federal Home Loan Mortgage Corporation provides credit and liquidity in the housing market. FHLMC, also called "Freddie MacFreddieMac" issues discount notes, bonds and mortgage pass-through securities.

FNMA: Like FHLB and Freddie MacFreddieMac, the Federal National Mortgage Association was established to provide credit and liquidity in the housing market. FNMA, also known as "Fannie MaeFannieMae," issues discount notes, bonds and mortgage pass-through securities.

GNMA: The Government National Mortgage Association, known as "Ginnie MaeGinnieMae," issues mortgage pass-through securities, which are guaranteed by the full faith and credit of the US Government.

PEFCO: The Private Export Funding Corporation assists exporters. Obligations of PEFCO are not guaranteed by the full faith and credit of the US government.

TVA: The Tennessee Valley Authority provides flood control and power and promotes development in portions of the Tennessee, Ohio, and Mississippi River valleys. TVA currently issues discount notes and bonds.

ASSET BACKED SECURITIES: Securities supported by pools of installment loans or leases or by pools of revolving lines of credit.

AVERAGE LIFE: In mortgage-related investments, including CMOs, the average time to expected receipt of principal payments, weighted by the amount of principal expected.

BANKER'S ACCEPTANCE: A money market instrument created to facilitate international trade transactions. It is highly liquid and safe because the risk of the trade transaction is transferred to the bank which "accepts" the obligation to pay the investor.

BENCHMARK: A comparison security or portfolio. A performance benchmark is a partial market index, which reflects the mix of securities allowed under a specific investment policy.

BROKER: A broker brings buyers and sellers together for a transaction for which the broker receives a commission. A broker does not sell securities from his own position.

CALIFORNIA MUNICIPAL TREASURERS ASSOCIATION (CMTA): Is the professional society of active public treasurers of California counties, cities and special districts. It sets ethical standards for the treasury profession in state and local governments in California.

CALIFORNIA SOCIETY OF MUNICIPAL FINANCE OFFICERS (CSMFO): Is a professional association of state, county and local government finance officers in

California. CSMFO is the statewide organization serving all of California municipal finance professionals, an affiliate of the nationwide Government Finance Officers Association (GFOA).

CALLABLE: A callable security gives the issuer the option to call it from the investor prior to its maturity. The main cause of a call is a decline in interest rates. If interest rates decline, the issuer will likely call its current securities and reissue them at a lower rate of interest.

CERTIFICATE OF DEPOSIT (CD): A time deposit with a specific maturity evidenced by a certificate.

CERTIFICATE OF DEPOSIT ACCOUNT REGISTRY SYSTEM (CDARS): A private placement service that allows local agencies to purchase more than $250,000 in CDs from a single financial institution (must be a participating institution of CDARS) while still maintaining FDIC insurance coverage. CDARS is currently the only entity providing this service. CDARS facilitates the trading of deposits between the California institution and other participating institutions in amounts that are less than $250,000 each, so that FDIC coverage is maintained.

COLLATERAL: **COLLATERAL.** Securities or cash pledged by a borrower to secure repayment of a loan or repurchase agreement. Also, securities pledged by a financial institution to secure deposits of public monies.

COLLATERALIZED BANK DEPOSIT: A bank deposit that is collateralized at least 100% (principal plus interest to maturity). The deposit is collateralized using assets set aside by the issuer such as Treasury securities or other qualified collateral to secure the deposit in excess of the limit covered by the Federal Deposit Insurance Corporation.

COLLATERALIZED MORTGAGE OBLIGATION (CMO): Classes of bonds that redistribute the cash flows of mortgage securities (and whole loans) to create securities that have different levels of prepayment risk, as compared to the underlying mortgage securities.

COLLATERIALIZED TIME DEPOSIT: Time deposits that are collateralized at least 100% (principal plus interest to maturity). These instruments are collateralized using assets set aside by the issuer such as Treasury securities or other qualified collateral to secure the deposit in excess of the limit covered by the Federal Deposit Insurance Corporation.
PAPER: The short-term unsecured debt of corporations.

COUPON: The rate of return at which interest is paid on a bond.

CREDIT RISK: The risk that principal and/or interest on an investment will not be paid in a timely manner due to changes in the condition of the issuer.
A dealer acts as a principal in security transactions, selling securities from and buying securities for his own position.

DEBENTURE: A bond secured only by the general credit of the issuer.
VS. PAYMENT (DVP): A securities industry procedure whereby payment for a security must be made at the time the security is delivered to the purchaser's agent.

DERIVATIVE: Any security that has principal and/or interest payments which are subject

to uncertainty (but not for reasons of default or credit risk) as to timing and/or amount, or any security which represents a component of another security which has been separated from other components ("Stripped" coupons and principal). A derivative is also defined as a financial instrument the value of which is totally or partially derived from the value of another instrument, interest rate, or index.

The difference between the par value of a bond and the cost of the bond, when the cost is below par. Some short-term securities, such as T-bills and banker's acceptances, are known as discount securities. They sell at a discount from par and return the par value to the investor at maturity without additional interest. Other securities, which have fixed coupons, trade at a discount when the coupon rate is lower than the current market rate for securities of that maturity and/or quality.

DISCOUNT SECURITIES: Non-interest bearing money market instruments that are issued a discount and redeemed at maturity for full face value *(e.g., U.S. Treasury Bills.)*

DIVERSIFICATION: Dividing investment funds among a variety of investments to avoid excessive exposure to any one source of risk.

DURATION: The weighted average time to maturity of a bond where the weights are the present values of the future cash flows. Duration measures the price sensitivity of a security to changes interest rates.

FEDERAL CREDIT AGENCIES: Agencies of the Federal government set up to supply credit to various classes of institutions and individuals, *e.g.*, S&L's, small business firms, students, farmers, farm cooperatives, and exporters.

FEDERAL DEPOSIT INSTURANCE CORPORATION (FDIC): The Federal Deposit Insurance Corporation (FDIC) is an independent federal agency insuring deposits in U.S. banks and thrifts in the event of bank failures. The FDIC was created in 1933 to maintain public confidence and encourage stability in the financial system through the promotion of sound banking practices.

FEDERAL FUNDS RATE: The rate of interest at which Fed funds are traded. This rate is currently pegged by the Federal Reserve through open-market operations.

FEDERAL HOME LOAN BANKS (FHLB): Government sponsored wholesale banks (currently 12 regional banks), which lend funds and provide correspondent banking services to member commercial banks, thrift institutions, credit unions and insurance companies. The mission of the FHLBs is to liquefy the housing related assets of its members who must purchase stock in their district Bank.

FEDERAL NATIONAL MORTGAGE ASSOCIATION (FNMA): FNMA, like GNMA was chartered under the Federal National Mortgage Association Act in 1938. FNMA is a federal corporation working under the auspices of the Department of Housing and Urban Development (HUD). It is the largest single provider of residential mortgage funds in the United States. Fannie Mae, as the corporation is called, is a private stockholder-owned corporation. The corporation's purchases include a variety of adjustable mortgages and second loans, in addition to fixed-rate mortgages. FNMA's securities are also highly liquid and are widely accepted. FNMA assumes and guarantees that all security holders will receive timely payment of principal and interest.

FEDERAL OPEN MARKET COMMITTEE (FOMC): Consists of seven members of the Federal Reserve Board and five of the twelve Federal Reserve Bank Presidents. The President of the New York Federal Reserve Bank is a permanent member, while the other Presidents serve on a rotating basis. The Committee periodically meets to set Federal Reserve guidelines regarding purchases and sales of Government Securities in the open market as a means of influencing the volume of bank credit and money.

FEDERAL RESERVE SYSTEM: The central bank of the United States created by Congress and consisting of a seven member Board of Governors in Washington, D.C., 12 regional banks and about 5,700 commercial banks that are members of the system.

GOVERNMENT NATIONAL MORTGAGE ASSOCIATION (GNMA or Ginnie Mae): Securities influencing the volume of bank credit guaranteed by GNMA and issued by mortgage bankers, commercial banks, savings and loan associations, and other institutions. Security holder is protected by full faith and credit of the U.S. Government. Ginnie Mae securities are backed by the FHA, VA or FHA mortgages. The term "pass-throughs" is often used to describe Ginnie Maes.

INTEREST: The amount earned while owning a debt security, generally calculated as a percentage of the principal amount.

INVERSE FLOATER: A bond or other type of debt whose coupon rate has an inverse relationship to a benchmark rate. An inverse floater adjusts its coupon payment as the interest rate changes. This investment is prohibited under in the City's and Successor Agency to the Brea Redevelopment Agency Investment Policy.

FEDERALLY INSURED TIME DEPOSIT: A time deposit is an interest-bearing bank deposit account that has a specified date of maturity, such as a certificate of deposit (CD). These deposits are limited to funds insured in accordance with FDIC insurance deposit limits.

LEVERAGE: Borrowing funds in order to invest in securities that have the potential to pay earnings at a rate higher than the cost of borrowing.

LIQUIDITY: The speed and ease with which an asset can be converted to cash.

LOCAL AGENCY INVESTMENT FUND (LAIF): A voluntary investment fund open to government entities and certain non-profit organizations in California that is managed by the State Treasurer's Office.

POOL: Investment pools that range from the State Treasurer's Office Local Agency Investment Fund (LAIF) to county pools, to Joint Powers Authorities (JPAs). These funds are not subject to the same SEC rules applicable to money market mutual funds.

MAKE WHOLE CALL: A type of call provision on a bond that allows the issuer to pay off the remaining debt early. Unlike a call option, with a make whole call provision, the issuer makes a lump sum payment that equals the net present value (NPV) of future coupon payments that will not be paid because of the call. With this type of call, an investor is compensated, or "made whole."

MARGIN: The difference between the market value of a security and the loan a broker makes using that security as collateral.

MARKET RISK: The risk that the value of securities will fluctuate with changes in overall market conditions or interest rates.

MARKET VALUE: The price at which a security can be traded.

MASTER REPURCHASE AGREEMENT: A written contract covering all future transactions between the parties to repurchase—reverse repurchase agreements that establishes each party's rights in the transactions. A master agreement will often specify, among other things, the right of the buyer-lender to liquidate the underlying securities in the event of default by the seller borrower.

MATURITY: The final date upon which the principal of a security becomes due and payable.

MEDIUM TERM NOTES: Unsecured, investment-grade senior debt securities of major corporations which are sold in relatively small amounts on either a continuous or an intermittent basis. MTNs are highly flexible debt instruments that can be structured to respond to market opportunities or to investor preferences.

MODIFIED DURATION: The percent change in price for a 100-basis point change in yields. Modified duration is the best single measure of a portfolio's or security's exposure to market risk.

MARKET: The market in which short-term debt instruments (T-bills, discount notes, commercial paper, and banker's acceptances) are issued and traded.

MONEY MARKET MUTUAL FUND: A mutual fund that invests exclusively in short-term securities. Examples of investments in money market funds are certificates of deposit and U.S. Treasury securities. Money market funds attempt to keep their net asset values at $1 per share.

MORTGAGE PASS-THROUGH SECURITIES: A securitized participation in the interest and principal cash flows from a specified pool of mortgages. Principal and interest payments made on the mortgages are passed through to the holder of the security.

MUNICIPAL SECURITIES: Securities issued by state and local agencies to finance capital and operating expenses.

MUTUAL FUND: An entity which pools the funds of investors and invests those funds in a set of securities which is specifically defined in the fund's prospectus. Mutual funds can be invested in various types of domestic and/or international stocks, bonds, and money market instruments, as set forth in the individual fund's prospectus. For most large, institutional investors, the costs associated with investing in mutual funds are higher than the investor can obtain through an individually managed portfolio.

NATIONALLY RECOGNIZED STATISTICAL RATING ORGANIZATION (NRSRO): A credit rating agency that the Securities and Exchange Commission in the United States uses for regulatory purposes. Credit rating agencies provide assessments of an investment's risk. The issuers of investments, especially debt securities, pay credit rating

agencies to provide them with ratings. The three most prominent NRSROs are Fitch, S&P, and Moody's.

NEGOTIABLE CERTIFICATE OF DEPOSIT (CD):). A short-term debt instrument that pays interest and is issued by a bank, savings or federal association, state or federal credit union, or state-licensed branch of a foreign bank. Negotiable CDs are traded in a secondary market and are payable upon order to the bearer or initial depositor (investor).

OFFER: The price asked by a seller of securities. (When you are buying securities, you ask for an offer.) See Asked and Bid.

OPEN MARKET OPERATIONS: Purchases and sales of government and certain other securities in the open market by the New York Federal Reserve Bank as directed by the FOMC in order to influence the volume of money and credit in the economy. Purchases inject reserves into the bank system and stimulate growth of money and credit; sales have the opposite effect. Open market operations are the Federal Reserve's most important and most flexible monetary policy tool.

PASSBOOK SAVINGS ACCOUNT: A savings account in which deposits and withdrawals are recorded in the depositor's passbook.

PASS-THOUGH SECURITY: A pool of fixed income securities backed by a package of assets (i.e. mortgages) where the holder receives the principal and interest payments.

PORTFOLIO: Collection of securities held by an investor.

PRIMARY DEALER: A financial institution (1) that is a trading counterparty with the Federal Reserve in its execution of market operations to carry out U.S. monetary policy, and (2) that participates for statistical reporting purposes in compiling data on activity in the U.S. Government securities market.

PRINCIPAL: The face value or par value of an investment.

PRUDENT INVESTOR STANDARD: Is a standard defined under State Government Code Section 53600.3 that states when investing, reinvesting, purchasing, acquiring, exchanging, selling, or managing public funds, a trustee shall act with care, skill, prudence, and diligence under the circumstances then prevailing, including, but not limited to, the general economic conditions and the anticipated needs of the City, that a prudent person acting in a like capacity and familiarity with those matters would use in the conduct of funds of a like character and with like aims, to safeguard the principal and maintain the liquidity needs of the City/Successor Agency to the Brea Redevelopment Agency. Within the limitations of this section and considering individual investments as part of an overall strategy, investments may be acquired as authorized by law.

PRUDENT PERSON (PRUDENT INVESTOR) RULE: A standard of responsibility which applies to fiduciaries. In California, the rule is stated as "Investments shall be managed with the care, skill, prudence and diligence, under the circumstances then prevailing, that a prudent person, acting in a like capacity and familiar with such matters, would use in the conduct of an enterprise of like character and with like aims to accomplish similar purposes."

QUALIFIED PUBLIC DEPOSITORIES: A financial institution which does not claim exemption from the payment of any sales or compensating use or ad valorem taxes under the laws of this state, which has segregated for the benefit of the commission eligible collateral having a value of not less than its maximum liability and which has been approved by the Public Deposit Protection Commission to hold public deposits.

RATE OF RETURN: The yield obtainable on a security based on its purchase price or its current market price. This may be the amortized yield to maturity on a bond the current income return.

REPURCHASE AGREEMENT: Short-term purchases of securities with a simultaneous agreement to sell the securities back at a higher price. From the seller's point of view, the same transaction is a reverse repurchase agreement.

REVERSE REPURCHASE AGREEMENT (REVERSE REPO): A reverse-repurchase agreement (reverse repo) involves an investor borrowing cash from a financial institution in exchange for securities. The investor agrees to repurchase the securities at a specified date for the same cash value plus an agreed upon interest rate. Although the transaction is similar to a repo, the purpose of entering into a reverse repo is quite different. While a repo is a straightforward investment of public funds, the reverse repo is a borrowing.

SAFEKEEPING: A service to bank customers whereby securities are held by the bank in the customer's name.

SECONDARY MARKET: A market made for the purchase and sale of outstanding issues following the initial distribution.

SECURITIES AND SECURITIES AND EXCHANGE COMMISSION (SEC): The U.S. Securities and Exchange Commission (SEC) is an independent federal government agency responsible for protecting investors, maintaining fair and orderly functioning of securities markets and facilitating capital formation. It was created by Congress in 1934 as the first federal regulator of securities markets. The SEC promotes full public disclosure, protects investors against fraudulent and manipulative practices in the market, and monitors corporate takeover actions in the United States.

SECURITIES AND EXCHANGE COMMISSION (SEC) RULE 15C315c3-1: An SEC rule setting capital requirements for brokers and dealers. Under Rule 15c3-1, a broker or dealer must have sufficient liquidity in order to cover the most pressing obligations. This is defined as having a certain amount of liquidity as a percentage of the broker/dealer's total obligations. If the percentage falls below a certain point, the broker or dealer may not be allowed to take on new clients and may have restrictions placed on dealings with current client.

STRUCTURED NOTE: A complex, fixed income instrument, which pays interest, based on a formula tied to other interest rates, commodities or indices. Examples include inverse floating rate notes which have coupons that increase when other interest rates are falling, and which fall when other interest rates are rising, and "dual index floaters," which pay interest based on the relationship between two other interest rates - for example, the yield on the ten-year Treasury note minus the Libor rate. Issuers of such notes lock in a reduced cost of borrowing by purchasing interest rate swap agreements.

SUPRANATURAL: A Supranational is a multi-national organization whereby member states transcend national boundaries or interests to share in the decision making to promote economic development in the member countries.

TOTAL RATE OF RETURN: A measure of a portfolio's performance over time. It is the internal rate of return, which equates the beginning value of the portfolio with the ending value; it includes interest earnings, realized and unrealized gains, and losses in the portfolio.

U.S. TREASURY OBLIGATIONS: Securities issued by the U.S. Treasury and backed by the full faith and credit of the United States. Treasuries are considered to have no credit risk and are the benchmark for interest rates on all other securities in the US and overseas. The Treasury issues both discounted securities and fixed coupon notes and bonds.

All securities issued with initial maturities of one year or less are issued as discounted instruments and are called Treasury bills. The Treasury currently issues three- and six-month T-bills at regular weekly auctions. It also issues "cash management" bills as needed to smooth out cash flows.

All securities issued with initial maturities of two to ten years are called Treasury notes and pay interest semi-annually.

TREASURY BONDS: All securities issued with initial maturities greater than ten years are called Treasury bonds. Like Treasury notes, they pay interest semi-annually.

UNIFORM NET CAPITAL RULE: Securities and Exchange Commission requirement that member firms as well as nonmember broker-dealers in securities maintain a maximum ratio of indebtedness to liquid capital of 15 to 1; also called net capital rule and net capital ratio. Indebtedness covers all money owed to a firm, including margin loans and commitments to purchase securities, one reason new public issues are spread among members of underwriting syndicates. Liquid capital includes cash and assets easily converted into cash.

YIELD TO MATURITY: The annualized internal rate of return on an investment which equates the expected cash flows from the investment to its cost.

City Of Brea / Successor Agency to the Brea Redevelopment Agency

FINAL

STATEMENT OF INVESTMENT POLICY

August 17, 2021

Purpose: This statement is intended to provide a guideline for the prudent investment of funds and to outline the policies for maximizing the efficiency of the City of Brea and Successor Agency to the Brea Redevelopment Agency ("City") cash management system. The ultimate goal is to enhance the economic status of the City while protecting its pooled funds. This investment policy has been prepared so as to be in conformance with all pertinent existing laws of the State of California for General Law cities.

Objective: The cash management system of the City is designed to accurately monitor and forecast expenditures and revenues, thus enabling the City to invest funds to the fullest extent possible. The City attempts to obtain a market rate of return without incurring undue risk to principal. The objectives of such investments are: 1) preserve capital, 2) maintain financial flexibility/liquidity, and 3) obtain a competitive rate of return on the City's investments.

Scope: This investment policy applies to the decisions and activities of the City with regard to investing the financial assets of all funds, including the following: General Fund, Special Revenue Funds, Assessment Funds, Enterprise Funds, Internal Service Funds, Capital Projects Funds, Debt Service Funds, Reserve Funds, Trust and Agency Funds, and any other funds that may be created from time to time. This policy does not apply retiree health care savings/trust/plan(s) or deferred compensation plans.

Investment Responsibility: Investment decisions of the City funds are the responsibility of the City Treasurer and/or Administrative Services Director, and shall comply with the Investment Policy of the City. These responsibilities include the authority to open accounts with banks, brokers and dealers, establish safekeeping accounts or other arrangements for the custody of securities and to execute such documents as may be necessary.

Those authorized to execute transactions for the City include the: 1) City Treasurer, 2) Administrative Services Director, 3) Financial Services Manager, and 4) those specifically deputized by the City Treasurer and Administrative Services Director with said authorization to be filed with the City Clerk. The City Treasurer and Administrative Services Director shall insure that an authorized person is available at all times to execute the City's investments. Investment managers, brokers and dealers are to be provided with a list of specified names of those persons authorized to execute transactions. The City Council may authorize the delegation of investments to an outside investment manager.

Reporting: The Administrative Services Director shall be responsible for reporting the status of investments to the City Council and City Manager on a monthly basis. These reports will disclose, at a minimum, the following information about the characteristics of the City's portfolio:

A. An asset listing showing par value, cost and accurate and complete market value of each security, type of investment, issuer, and interest rate.

B. Monthly transactions for the period.
C. A one-page summary report that shows:
    1. Average maturity of the portfolio and modified duration of the portfolio;
    2. Maturity distribution of the portfolio;
    3. Average portfolio credit quality; and,
    4. Time-weighted total rate of return for the portfolio for the prior one month, three months, twelve months, year to date, and since inception compared to the City's market benchmark returns for the same periods;
D. A statement of compliance with investment policy, including a schedule of any transactions or holdings which do not comply with this policy or with the California Government Code, including a justification for their presence in the portfolio and a timetable for resolution.
E. A statement that the City has adequate funds to meet its cash flow requirements for the next six months.

Reports are to be submitted to the City Council and City Manager by the 3rd City Council meeting following the end of the reporting month.

The Investment Advisory Committee will review the status of investments on a quarterly basis. These reports shall include the type of investment, institution, face amount, market value, book value, interest rate, date of maturity, compliance to the investment policy.

If the City has an outside Investment Manager, the Investment Manager shall periodically report on the activity and results of the funds being managed by the Investment Manager. Additionally, the Investment Manager shall notify the Investment Advisory Committee when investment portfolios demonstrate low performance, if any, which occurs between each periodic report.

Prudence: The standard of prudence to be applied by the City Treasurer, Administrative Services Director, Financial Services Manager, and those specifically deputized by the City Treasurer and Administrative Services Director with said authorization to be filed with the City Clerk shall be the "prudent investor" standard, as defined under Government Code Section 53600.3 which states, "When investing, reinvesting, purchasing, acquiring, exchanging, selling, or managing public funds, a trustee shall act with care, skill, prudence, and diligence under the circumstances then prevailing, including, but not limited to, the general economic conditions and the anticipated needs of the City, that a prudent person acting in a like capacity and familiarity with those matters would use in the conduct of funds of a like character and with like aims, to safeguard the principal and maintain the liquidity needs of the City/Successor Agency to the Brea Redevelopment Agency. Within the limitations of this section and considering individual investments as part of an overall strategy, investments may be acquired as authorized by law."

Ethics and Conflicts of Interest: Officers and employees involved in the City investment process shall refrain from personal business activity that could conflict with proper execution of the investment program or which could impair their ability to make impartial investment decisions. City employees and investment officials shall disclose any material financial interests in financial institutions that conduct business within the City, and they shall further disclose any personal financial/investment positions that could be related to the performance of the City's portfolio. City employees and officers shall refrain

from undertaking personal investment transactions with the same individual with whom business is conducted on behalf of the City.

Investment Instruments: Funds of the City may be invested in any instrument allowable under current legislation of the State of California (Government Code Section 53600 et sec.) so long as the investment is appropriate and consistent with this Investment Policy taking into consideration the City's investment objectives. Investment instruments may include:

- U.S. Treasury Obligations (Bills, Notes and Bonds)
- U.S. Government Agency Securities and Instrumentality's of Government Sponsored Corporations, including a maximum of 5% in callable bonds issued by such agencies
- Banker's Acceptances
- Commercial Paper
- Repurchase Agreements (requires a master repurchase agreement to be signed and on file with the bank or broker/dealer)
- Certificates of Deposit
- Negotiable Certificates of Deposit
- Passbook Savings Accounts
- Interest Bearing Checking Accounts
- Medium Term Corporate Notes
- Bank Money Market Accounts
- Local Agency Investment Fund (State Pool)
- County of Orange Investment Fund (County Pool)
- Other investments that are, or may become, legal investments through the State of California Government Code.

Provisions of Government Code Section 53601 shall be adhered to at all times. This includes, but is not limited to, the following restrictions:

- Bankers Acceptances cannot exceed 40% of the portfolio nor exceed 180 days;
- Commercial Paper cannot exceed 25% of the portfolio. Commercial Paper must be rated P-1 (Moody's), A-1 (Standard & Poor's) and cannot exceed 270 days;
- Money Market Funds cannot exceed 20% of the portfolio;
- Medium Term Corporate Notes cannot exceed 30% of the portfolio and must carry a minimum A rating;
- Pass-through securities including Collateralized Mortgage Obligations cannot exceed 20% of the portfolio.
    - Asset Backed Securities are limited to a maximum of 10% of the portfolio at time of purchase
        - Maximum maturity of 5 years
        - Asset Backed Security must be rated AA or higher
- Supranational Securities must be rated AA or higher, cannot exceed 15% of the portfolio and no more than 5% of portfolio per issuer. The maximum maturity cannot exceed 5 years.
- Additionally, the City will use the guidelines established by the joint committee of the California Municipal Treasurers Association and the California Society of Municipal Finance Officers as the basis for investing in government investment pools.

For purposes of complying with legal investment limitations, the percentage references pertaining to the above refers to the maturity value of the portfolio at the time of purchase.

If a security owned by the City is downgraded to a level below the requirements of this policy, making the security ineligible for additional purchases, the following steps will be taken:

- Any actions taken related to the downgrade by the investment manager will be communicated to the City Council, the Investment Advisory Committee, City Treasurer and the Administrative Services Director within two (2) business days.

- If a decision is made to retain the security, the credit situation will be monitored and reported to the City Council.

Prohibited Investments: The City shall not invest any funds in derivatives, inverse floaters, range notes, or interest- only strips that are derived from a pool of mortgages. The City shall not invest any funds in any security that could result in a zero interest accrual if held to maturity.

However, the City is authorized to invest in securities that could result in zero or negative interest accrual if held to maturity if they are issued by or backed by the United States Government. Negative interest rate securities in United States Government securities will only be permitted in the portfolio in the event the United States Federal Reserve adopts a negative interest rate monetary policy framework. Notification to the City Council, the Investment Advisory Committee, the City Treasurer, and the Administrative Services Director will be given within two (2) business days when securities of this type are being added to the portfolio, this allows for full disclosure and understanding of the strategy given the market conditions.

Collateralization: Collateralization shall be required on two types of investments: Certificates of deposit and repurchase (and reverse repurchase) agreements. A collateral agreement must be current and on file before any funds can be transferred for collateralized certificates of deposit.

Collateral shall be held by an independent third party with whom the City has a current written custodial agreement. A clearly marked evidence of ownership (safekeeping receipt) must be supplied to the City and retained. The right of collateral substitution is granted in accordance with the following requirements:

A. Certificates of Deposit
   1. Government securities used as collateral require one hundred and ten (110) percent of market value to the face amount of the deposit
   2. Promissory notes secured by first trust deeds used as collateral require one hundred and fifty (150) percent of market value to the face amount of the deposit
   3. Irrevocable letters of Credit issued by the Federal Home Loan Bank of San Francisco require one hundred and five (105) percent of market value to the face amount of the deposit

B. Repurchase and Reverse Repurchase Agreements

1. Only U.S. Treasury securities or federal agency securities are acceptable collateral. All securities underlying repurchase agreements must be delivered to the City's custodian bank versus payment or be handled under a properly executed tri-party repurchase agreement. The total market value of all collateral for each repurchase agreement must equal or exceed one hundred and two (102) percent of the total dollar value of the money invested by the City for the term of the investment. For any repurchase agreement with a term of more than one (1) day, the value of the underlying securities must be reviewed on an ongoing basis according to market conditions. Market value must be calculated each time there is a substitution of collateral.
2. The City or its trustee shall have perfected first security interest under the Uniform Commercial Code in all securities subject to a repurchase agreement.

Investment Criteria: Criteria for selecting investments and the order of priority are:

A. Safety

The safety and risk associated with an investment refers to the potential loss of principal, interest or a combination of these amounts. The City only operates in those investments that are considered very safe.

B. Liquidity

This refers to the ability to convert an investment into cash at any moment in time with a minimal chance of losing some portion of principal or interest. Liquidity is an important investment quality when there is an occasional need for funds. The potential fluctuations in market value and the expected future availability of reasonable bids in the market are to be important considerations when selecting an investment.

C. Yield

Yield is the potential dollar earnings an investment can provide and sometimes is described as the rate of return.

Diversification: The City will diversify the use of investment instruments to avoid incurring unreasonable risks inherent in over-investing in specific instruments, or individual financial institutions. In no case, without prior notification and approval from the City Council, shall the amount invested in one entity at the time of purchase exceed 5% of the total portfolio, with the following exceptions:

- U.S. Federal Government Agency Obligations of one specific entity cannot exceed 25% of the maturity value of the portfolio at the time of purchase.
- U.S. Treasury Obligations (Treasury Bills, Treasury Strips, Bonds, Notes) directly backed by the full faith and credit of the United States for payment of principal and interest shall not be subject to a maximum percentage of the portfolio.
- Approved State and County investment pools together cannot exceed 60% of the maturity value of the portfolio at the time of purchase, and no more than 40% of the maturity value at the time of purchase can be deposited in any one particular pool.

Investment Pools: The City Treasurer, Administrative Services Director and City Council

have determined that use of investment pools is a practical investment option. The City will utilize guidelines established by the California Municipal Treasurers Association and California Society of Municipal Finance Officers to ensure the safety of investment pools which includes a thorough investigation of the pool/fund prior to investing, and on a continual basis. There shall be a questionnaire developed which will answer the following general questions:

- A description of eligible investment securities, and a written statement of investment policy and objectives.
- A description of interest calculations and how it is distributed, and how gains and losses are treated.
- A description of how the securities are safeguarded (including the settlement processes), and how often the securities are priced and the program audited.
- A description of who may invest in the program, how often, what size deposit and withdrawal are allowed.
- A schedule for receiving statements and portfolio listings.
- Are reserves, retained earnings, etc. utilized by the pool/fund?
- A fee schedule, and when and how is it assessed.
- Is the pool/fund eligible for bond proceeds and/or will it accept such proceeds?

Maturity Limitations: Every investment instrument purchased must have a term remaining to maturity of less than five years, unless the investment is for the Senior Low Cost Housing Subsidy Program, bond proceeds for the Reserve Fund, funded/capitalized interest fund; or the City Council has granted express authority to make that investment, either specifically or as part of an investment program approved by the City Council no more than three months prior to the investment. When possible, a minimum of 25% of the portfolio should be in maturities of one year or less.

Safekeeping and Custody: All security transactions, including collateral for repurchase agreements, entered into by the City shall be conducted on a delivery-versus-payment (DVP) basis which ensure that securities are deposited in an eligible financial institution prior to the release of funds. Securities shall be held by a third-party custodian designated by the City and evidenced by safekeeping receipts with a written custodial agreement. The only exception to the foregoing shall be depository accounts and securities purchases made with: LAIF, direct time certificates of deposit and money market mutual funds, since the purchased securities are not deliverable. Settlement instructions sent to the safekeeping agent shall require authorization.

Monthly trust statements are reconciled to the Investment Reports by the City's Accountant. The City's Accountant performs reconciliation of the monthly bank statements. The periodic review of the investment portfolio, including investment types, purchase price, market values, maturity dates, and investment yields as well as conformance to the stated investment policy will be performed by the Investment Advisory Committee.

Qualified Broker/Dealers: For those investments managed directly by the City, the City shall maintain a listing of broker/dealers that are approved by the Investment Advisory Committee for investment purposes. All broker/dealers who desire to bid for investment transactions must supply the City with the following information; a completed broker/dealer

questionnaire, audited financial statements, proof of National Association of Security Dealers' certification, trading resolution, proof of California registration, and certification of having read the City of Brea's investment policy.

The Investment Advisory Committee will conduct an annual review of the qualified broker/dealers. The decision to add or subtract from the authorized list of broker/dealers will be based on many factors to include, but not limited to, products offered, service levels, references, etc. No single factor will determine the Committee's final decision. A current audited financial statement is required to be on file for each broker/dealer with which the City of Brea invests. The City's authorized brokers/dealers shall provide written confirmation of having read and understood the City's investment policy and that all investments recommended by them will be suitable for the City of Brea.

Selection of broker/dealers used by an external investment adviser retained by the City will be at the sole discretion of the adviser. Where possible, transactions with broker/dealers shall be selected on a competitive basis and their bid or offering prices shall be recorded. If there is no other readily available competitive offering, best efforts will be made to document quotations for comparable or alternative securities. When purchasing original issue instrumentality securities, no competitive offerings will be required as all dealers in the selling group offer those securities at the same original issue price.

Monitoring and Adjusting the Portfolio: The City Treasurer and Administrative Services Director will routinely monitor the contents, performance and risk profile of the investment portfolio, the investment alternatives, and the relative values of competing investment instruments and will adjust the portfolio accordingly based on the approved Statement of Investment Policy on a quarterly basis. The City Council shall also bear a responsibility for monitoring the implementation of this policy and the safeguarding of the City's Treasury.

Performance Standards: The investment portfolio shall be designed to attain a market-average rate of return throughout budgetary and economic cycles, taking into account the City's risk constraints, the cash flow characteristics of the portfolio, and state and local laws, ordinances or resolutions that restrict investments.

The Administrative Services Director shall monitor and evaluate the portfolio's performance relative to market benchmark, which will be included in the monthly report of investments. The Treasurer and Administrative Services Director shall select an appropriate, readily available index to use as a market benchmark.

Bond Funds/Arbitrage: The U.S. Tax Reform Act of 1986 requires the City to perform annual arbitrage calculations and rebate excess earnings from investments of proceeds of bond issues sold after the effective date of this law to the U.S. Treasury. This arbitrage calculation may be contracted with an outside source to provide the necessary technical assistance to comply with this regulation. Funds subject to the 1986 Tax Reform Act will be kept segregated from other funds and records will be kept in a fashion to facilitate the calculations. The City's investment position relative to the new arbitrage restrictions is to continue pursuing the maximum yield on applicable investments while ensuring the safety of capital and liquidity. It is a fiscally sound position to continue maximization of yield and to rebate excess earnings, if necessary.

Review/or Modification: The Investment Advisory Committee shall be responsible for reviewing and recommending modifications to the Statement of Investment Policy and submitting it to the City Council for approval on an annual basis. However, the City Treasurer and Administrative Services Director may, at any time, further restrict the investments approved for purchase as deemed appropriate.

Internal Controls: The City Treasurer and Administrative Services Director shall organize the investment function so that specific responsibility for the performance of duties is assigned with a clear line of authority and reporting. The functions of authorizing, executing and recording transactions, custody of investments and performing reconciliation's will be handled by separate persons to reduce the risk that anyone person is in a position to conceal errors or fraud in the normal course of duty. While no internal control system, however elaborate, can guarantee absolute assurance that the City's assets are safeguarded, it is the intent of the City's internal control system to provide reasonable assurance that management of the investment function meets the City's objectives. These internal controls shall be reviewed annually by the independent auditor who shall review and comment upon the content of this policy, the effectiveness of its implementation and applicable management controls with regard to its implementation and the safeguarding of the City's Treasury funds.

Investment Advisory Committee: An Investment Advisory Committee ("Committee") is established to review and make recommendations on the Investment Policy and investment strategy of the City of Brea/Successor Agency to the Brea Redevelopment Agency and to strengthen the internal control of the management of the City's funds. The following are the duties and responsibilities of the Committee:

A. <u>Purpose</u>
   1. To review and make recommendations on investment policy and investment strategy of the City of Brea/Successor Agency to the Brea Redevelopment Agency.
   2. To review the City's investments on a periodic basis and to recommend any exceptions and/or changes to the policy, to the City Council for review and approval.

B. <u>Composition of Committee</u>
   1. City Treasurer
   2. City Council Member, who serves as the Chair (selected by the City Council)
   3. Administrative Services Director
   4. Financial Services Manager
   5. Three (3) Brea Citizens (selected by the City Council with the City Treasurer as subcommittee members)

C. <u>Functions</u>
   1. Annually (or as needed)
      a. To review and approve Statement of Investment Policy
      b. To review the financial condition and registrations of qualified broker/dealers (Only required when investments are managed by the City)

   2. Monthly or Quarterly
      a. To review the City's investments

b. To recommend any modifications to the Investment Policy
c. To develop and carry out the ongoing investment strategy in accordance with the Investment Policy
d. To provide a status report at a study session of the City Council as requested

The function of the Committee is not to inhibit the daily operation of the Administrative Services Department, but to provide policy guidelines within which to work on a day-to-day basis. By this, it is meant that each individual trade need not be approved by the Committee at the time it is transacted provided that it falls within the scope of the Statement of Investment Policy.

Disclosure: Members of the Committee shall be required to comply with the Fair Political Practices Act reporting requirements (Form 700) on an annual basis and submit filings to the City Clerk's Office.

SEGREGATION OF RESPONSIBILITIES
(External)

FUNCTION	RESPONSIBILITY
Develop formal Statement of Investment Policy	Administrative Services Director Financial Services Manager
Recommend modifications to Investment Policy	City Treasurer Administrative Services Director Financial Services Manager
Review formal Statement of Investment Policy and recommend a Council action	City Treasurer Investment Advisory Committee
Adopt formal Statement of Investment Policy	City Council
Select investments	Outside Investment Manager
Execute investment transactions and fax or email completed trade information to City	Outside Investment Manager
Review transactions for compliance with investment policy	City Treasurer Administrative Services Director or Financial Services Manager
Investment verification (match broker confirmation to trade information provided by outside Investment Manager to City investment records)	Administrative Services Director or Financial Services Manager
Record investment transactions into City's accounting records	City Accountant
Reconcile investment records to accounting records and bank statements and report any variances to Administrative Services Director and City Treasurer	City Accountant
Security	All investment securities will be held in safekeeping in the trust department of the City's Depository Bank, or other third party custodian as designated by the City Treasurer or Administrative Services Director.

SEGREGATION OF RESPONSIBILITIES
(Internal)

FUNCTION	RESPONSIBILITY
Develop formal Statement of Investment Policy	City Treasurer Administrative Services Director Financial Services Manager
Recommend modifications to Statement of Investment Policy	City Treasurer Administrative Services Director Financial Services Manager Investment Advisory Committee
Review formal Statement of Investment Policy and recommend City Council action	Investment Advisory Committee
Annually review and adopt a formal Statement of Investment Policy	City Council
Select investments	Administrative Services Director or Financial Services Manager
Approve transactions	Administrative Services Director
Execute investment transactions	Administrative Services Director
Investment verification (match broker confirmation to City investment records)	Administrative Services Director or Financial Services Manager
Record investment transactions into City's accounting records	City Accountant
Reconcile investment records to accounting records and bank statements and report any variances to the Administrative Services Director	City Accountant
Security	All investment securities will be held in safekeeping in the trust department of the City's Depository Bank, or other third party custodian as designated by the City Treasurer or Administrative Services Director

GLOSSARY OF INVESTMENTS TERMS

AGENCIES: Shorthand market terminology for any obligation issued by *a government-sponsored entity (GSE),* or a *federally related institution*. Most obligations of GSEs are not guaranteed by the full faith and credit of the US government. Examples are:

FFCB: The Federal Farm Credit Bank System provides credit and liquidity in the agricultural industry. FFCB issues discount notes and bonds.

FHLB: The Federal Home Loan Bank provides credit and liquidity in the housing market. FHLB issues discount notes and bonds.

FHLMC: Like FHLB, the Federal Home Loan Mortgage Corporation provides credit and liquidity in the housing market. FHLMC, also called "Freddie MacFreddieMac" issues discount notes, bonds and mortgage pass-through securities.

FNMA: Like FHLB and Freddie MacFreddieMac, the Federal National Mortgage Association was established to provide credit and liquidity in the housing market. FNMA, also known as "Fannie MaeFannieMae," issues discount notes, bonds and mortgage pass-through securities.

GNMA: The Government National Mortgage Association, known as "Ginnie MaeGinnieMae," issues mortgage pass-through securities, which are guaranteed by the full faith and credit of the US Government.

PEFCO: The Private Export Funding Corporation assists exporters. Obligations of PEFCO are not guaranteed by the full faith and credit of the US government.

TVA: The Tennessee Valley Authority provides flood control and power and promotes development in portions of the Tennessee, Ohio, and Mississippi River valleys. TVA currently issues discount notes and bonds.

ASSET BACKED SECURITIES: Securities supported by pools of installment loans or leases or by pools of revolving lines of credit.

AVERAGE LIFE: In mortgage-related investments, including CMOs, the average time to expected receipt of principal payments, weighted by the amount of principal expected.

BANKER'S ACCEPTANCE: A money market instrument created to facilitate international trade transactions. It is highly liquid and safe because the risk of the trade transaction is transferred to the bank which "accepts" the obligation to pay the investor.

BENCHMARK: A comparison security or portfolio. A performance benchmark is a partial market index, which reflects the mix of securities allowed under a specific investment policy.

BROKER: A broker brings buyers and sellers together for a transaction for which the broker receives a commission. A broker does not sell securities from his own position.

CALIFORNIA MUNICIPAL TREASURERS ASSOCIATION (CMTA): Is the professional society of active public treasurers of California counties, cities and special districts. It sets ethical standards for the treasury profession in state and local governments in California.

CALIFORNIA SOCIETY OF MUNICIPAL FINANCE OFFICERS (CSMFO): Is a professional association of state, county and local government finance officers in

California. CSMFO is the statewide organization serving all of California municipal finance professionals, an affiliate of the nationwide Government Finance Officers Association (GFOA).

CALLABLE: A callable security gives the issuer the option to call it from the investor prior to its maturity. The main cause of a call is a decline in interest rates. If interest rates decline, the issuer will likely call its current securities and reissue them at a lower rate of interest.

CERTIFICATE OF DEPOSIT (CD): A time deposit with a specific maturity evidenced by a certificate.

CERTIFICATE OF DEPOSIT ACCOUNT REGISTRY SYSTEM (CDARS): A private placement service that allows local agencies to purchase more than $250,000 in CDs from a single financial institution (must be a participating institution of CDARS) while still maintaining FDIC insurance coverage. CDARS is currently the only entity providing this service. CDARS facilitates the trading of deposits between the California institution and other participating institutions in amounts that are less than $250,000 each, so that FDIC coverage is maintained.

COLLATERAL: **COLLATERAL.** Securities or cash pledged by a borrower to secure repayment of a loan or repurchase agreement. Also, securities pledged by a financial institution to secure deposits of public monies.

COLLATERALIZED BANK DEPOSIT: A bank deposit that is collateralized at least 100% (principal plus interest to maturity). The deposit is collateralized using assets set aside by the issuer such as Treasury securities or other qualified collateral to secure the deposit in excess of the limit covered by the Federal Deposit Insurance Corporation.

COLLATERALIZED MORTGAGE OBLIGATION (CMO): Classes of bonds that redistribute the cash flows of mortgage securities (and whole loans) to create securities that have different levels of prepayment risk, as compared to the underlying mortgage securities.

COLLATERIALIZED TIME DEPOSIT: Time deposits that are collateralized at least 100% (principal plus interest to maturity). These instruments are collateralized using assets set aside by the issuer such as Treasury securities or other qualified collateral to secure the deposit in excess of the limit covered by the Federal Deposit Insurance Corporation.
PAPER: The short-term unsecured debt of corporations.

COUPON: The rate of return at which interest is paid on a bond.

CREDIT RISK: The risk that principal and/or interest on an investment will not be paid in a timely manner due to changes in the condition of the issuer.
A dealer acts as a principal in security transactions, selling securities from and buying securities for his own position.

DEBENTURE: A bond secured only by the general credit of the issuer.
VS. PAYMENT (DVP): A securities industry procedure whereby payment for a security must be made at the time the security is delivered to the purchaser's agent.

DERIVATIVE: Any security that has principal and/or interest payments which are subject

to uncertainty (but not for reasons of default or credit risk) as to timing and/or amount, or any security which represents a component of another security which has been separated from other components ("Stripped" coupons and principal). A derivative is also defined as a financial instrument the value of which is totally or partially derived from the value of another instrument, interest rate, or index.

The difference between the par value of a bond and the cost of the bond, when the cost is below par. Some short-term securities, such as T-bills and banker's acceptances, are known as discount securities. They sell at a discount from par and return the par value to the investor at maturity without additional interest. Other securities, which have fixed coupons, trade at a discount when the coupon rate is lower than the current market rate for securities of that maturity and/or quality.

DISCOUNT SECURITIES: Non-interest bearing money market instruments that are issued a discount and redeemed at maturity for full face value *(e.g., U.S. Treasury Bills.)*

DIVERSIFICATION: Dividing investment funds among a variety of investments to avoid excessive exposure to any one source of risk.

DURATION: The weighted average time to maturity of a bond where the weights are the present values of the future cash flows. Duration measures the price sensitivity of a security to changes interest rates.

FEDERAL CREDIT AGENCIES: Agencies of the Federal government set up to supply credit to various classes of institutions and individuals, *e.g.*, S&L's, small business firms, students, farmers, farm cooperatives, and exporters.

FEDERAL DEPOSIT INSTURANCE CORPORATION (FDIC): The Federal Deposit Insurance Corporation (FDIC) is an independent federal agency insuring deposits in U.S. banks and thrifts in the event of bank failures. The FDIC was created in 1933 to maintain public confidence and encourage stability in the financial system through the promotion of sound banking practices.

FEDERAL FUNDS RATE: The rate of interest at which Fed funds are traded. This rate is currently pegged by the Federal Reserve through open-market operations.

FEDERAL HOME LOAN BANKS (FHLB): Government sponsored wholesale banks (currently 12 regional banks), which lend funds and provide correspondent banking services to member commercial banks, thrift institutions, credit unions and insurance companies. The mission of the FHLBs is to liquefy the housing related assets of its members who must purchase stock in their district Bank.

FEDERAL NATIONAL MORTGAGE ASSOCIATION (FNMA): FNMA, like GNMA was chartered under the Federal National Mortgage Association Act in 1938. FNMA is a federal corporation working under the auspices of the Department of Housing and Urban Development (HUD). It is the largest single provider of residential mortgage funds in the United States. Fannie Mae, as the corporation is called, is a private stockholder-owned corporation. The corporation's purchases include a variety of adjustable mortgages and second loans, in addition to fixed-rate mortgages. FNMA's securities are also highly liquid and are widely accepted. FNMA assumes and guarantees that all security holders will receive timely payment of principal and interest.

FEDERAL OPEN MARKET COMMITTEE (FOMC): Consists of seven members of the Federal Reserve Board and five of the twelve Federal Reserve Bank Presidents. The President of the New York Federal Reserve Bank is a permanent member, while the other Presidents serve on a rotating basis. The Committee periodically meets to set Federal Reserve guidelines regarding purchases and sales of Government Securities in the open market as a means of influencing the volume of bank credit and money.

FEDERAL RESERVE SYSTEM: The central bank of the United States created by Congress and consisting of a seven member Board of Governors in Washington, D.C., 12 regional banks and about 5,700 commercial banks that are members of the system.

GOVERNMENT NATIONAL MORTGAGE ASSOCIATION (GNMA or Ginnie Mae): Securities influencing the volume of bank credit guaranteed by GNMA and issued by mortgage bankers, commercial banks, savings and loan associations, and other institutions. Security holder is protected by full faith and credit of the U.S. Government. Ginnie Mae securities are backed by the FHA, VA or FHA mortgages. The term “pass-throughs” is often used to describe Ginnie Maes.

INTEREST: The amount earned while owning a debt security, generally calculated as a percentage of the principal amount.

INVERSE FLOATER: A bond or other type of debt whose coupon rate has an inverse relationship to a benchmark rate. An inverse floater adjusts its coupon payment as the interest rate changes. This investment is prohibited under in the City’s and Successor Agency to the Brea Redevelopment Agency Investment Policy.

FEDERALLY INSURED TIME DEPOSIT: A time deposit is an interest-bearing bank deposit account that has a specified date of maturity, such as a certificate of deposit (CD). These deposits are limited to funds insured in accordance with FDIC insurance deposit limits.

LEVERAGE: Borrowing funds in order to invest in securities that have the potential to pay earnings at a rate higher than the cost of borrowing.

LIQUIDITY: The speed and ease with which an asset can be converted to cash.

LOCAL AGENCY INVESTMENT FUND (LAIF): A voluntary investment fund open to government entities and certain non-profit organizations in California that is managed by the State Treasurer’s Office.

POOL: Investment pools that range from the State Treasurer’s Office Local Agency Investment Fund (LAIF) to county pools, to Joint Powers Authorities (JPAs). These funds are not subject to the same SEC rules applicable to money market mutual funds.

MAKE WHOLE CALL: A type of call provision on a bond that allows the issuer to pay off the remaining debt early. Unlike a call option, with a make whole call provision, the issuer makes a lump sum payment that equals the net present value (NPV) of future coupon payments that will not be paid because of the call. With this type of call, an investor is compensated, or "made whole."

MARGIN: The difference between the market value of a security and the loan a broker makes using that security as collateral.

MARKET RISK: The risk that the value of securities will fluctuate with changes in overall market conditions or interest rates.

MARKET VALUE: The price at which a security can be traded.

MASTER REPURCHASE AGREEMENT: A written contract covering all future transactions between the parties to repurchase—reverse repurchase agreements that establishes each party's rights in the transactions. A master agreement will often specify, among other things, the right of the buyer-lender to liquidate the underlying securities in the event of default by the seller borrower.

MATURITY: The final date upon which the principal of a security becomes due and payable.

MEDIUM TERM NOTES: Unsecured, investment-grade senior debt securities of major corporations which are sold in relatively small amounts on either a continuous or an intermittent basis. MTNs are highly flexible debt instruments that can be structured to respond to market opportunities or to investor preferences.

MODIFIED DURATION: The percent change in price for a 100-basis point change in yields. Modified duration is the best single measure of a portfolio's or security's exposure to market risk.
MARKET: The market in which short-term debt instruments (T-bills, discount notes, commercial paper, and banker's acceptances) are issued and traded.

MONEY MARKET MUTUAL FUND: A mutual fund that invests exclusively in short-term securities. Examples of investments in money market funds are certificates of deposit and U.S. Treasury securities. Money market funds attempt to keep their net asset values at $1 per share.

MORTGAGE PASS-THROUGH SECURITIES: A securitized participation in the interest and principal cash flows from a specified pool of mortgages. Principal and interest payments made on the mortgages are passed through to the holder of the security.

MUNICIPAL SECURITIES: Securities issued by state and local agencies to finance capital and operating expenses.

MUTUAL FUND: An entity which pools the funds of investors and invests those funds in a set of securities which is specifically defined in the fund's prospectus. Mutual funds can be invested in various types of domestic and/or international stocks, bonds, and money market instruments, as set forth in the individual fund's prospectus. For most large, institutional investors, the costs associated with investing in mutual funds are higher than the investor can obtain through an individually managed portfolio.

NATIONALLY RECOGNIZED STATISTICAL RATING ORGANIZATION (NRSRO): A credit rating agency that the Securities and Exchange Commission in the United States uses for regulatory purposes. Credit rating agencies provide assessments of an investment's risk. The issuers of investments, especially debt securities, pay credit rating

agencies to provide them with ratings. The three most prominent NRSROs are Fitch, S&P, and Moody's.

NEGOTIABLE CERTIFICATE OF DEPOSIT (CD):). A short-term debt instrument that pays interest and is issued by a bank, savings or federal association, state or federal credit union, or state-licensed branch of a foreign bank. Negotiable CDs are traded in a secondary market and are payable upon order to the bearer or initial depositor (investor).

OFFER: The price asked by a seller of securities. (When you are buying securities, you ask for an offer.) See Asked and Bid.

OPEN MARKET OPERATIONS: Purchases and sales of government and certain other securities in the open market by the New York Federal Reserve Bank as directed by the FOMC in order to influence the volume of money and credit in the economy. Purchases inject reserves into the bank system and stimulate growth of money and credit; sales have the opposite effect. Open market operations are the Federal Reserve's most important and most flexible monetary policy tool.

PASSBOOK SAVINGS ACCOUNT: A savings account in which deposits and withdrawals are recorded in the depositor's passbook.

PASS-THOUGH SECURITY: A pool of fixed income securities backed by a package of assets (i.e. mortgages) where the holder receives the principal and interest payments.

PORTFOLIO: Collection of securities held by an investor.

PRIMARY DEALER: A financial institution (1) that is a trading counterparty with the Federal Reserve in its execution of market operations to carry out U.S. monetary policy, and (2) that participates for statistical reporting purposes in compiling data on activity in the U.S. Government securities market.

PRINCIPAL: The face value or par value of an investment.

PRUDENT INVESTOR STANDARD: Is a standard defined under State Government Code Section 53600.3 that states when investing, reinvesting, purchasing, acquiring, exchanging, selling, or managing public funds, a trustee shall act with care, skill, prudence, and diligence under the circumstances then prevailing, including, but not limited to, the general economic conditions and the anticipated needs of the City, that a prudent person acting in a like capacity and familiarity with those matters would use in the conduct of funds of a like character and with like aims, to safeguard the principal and maintain the liquidity needs of the City/Successor Agency to the Brea Redevelopment Agency. Within the limitations of this section and considering individual investments as part of an overall strategy, investments may be acquired as authorized by law.

PRUDENT PERSON (PRUDENT INVESTOR) RULE: A standard of responsibility which applies to fiduciaries. In California, the rule is stated as "Investments shall be managed with the care, skill, prudence and diligence, under the circumstances then prevailing, that a prudent person, acting in a like capacity and familiar with such matters, would use in the conduct of an enterprise of like character and with like aims to accomplish similar purposes."

QUALIFIED PUBLIC DEPOSITORIES: A financial institution which does not claim exemption from the payment of any sales or compensating use or ad valorem taxes under the laws of this state, which has segregated for the benefit of the commission eligible collateral having a value of not less than its maximum liability and which has been approved by the Public Deposit Protection Commission to hold public deposits.

RATE OF RETURN: The yield obtainable on a security based on its purchase price or its current market price. This may be the amortized yield to maturity on a bond the current income return.

REPURCHASE AGREEMENT: Short-term purchases of securities with a simultaneous agreement to sell the securities back at a higher price. From the seller's point of view, the same transaction is a reverse repurchase agreement.

REVERSE REPURCHASE AGREEMENT (REVERSE REPO): A reverse-repurchase agreement (reverse repo) involves an investor borrowing cash from a financial institution in exchange for securities. The investor agrees to repurchase the securities at a specified date for the same cash value plus an agreed upon interest rate. Although the transaction is similar to a repo, the purpose of entering into a reverse repo is quite different. While a repo is a straightforward investment of public funds, the reverse repo is a borrowing.

SAFEKEEPING: A service to bank customers whereby securities are held by the bank in the customer's name.

SECONDARY MARKET: A market made for the purchase and sale of outstanding issues following the initial distribution.

SECURITIES AND SECURITIES AND EXCHANGE COMMISSION (SEC): The U.S. Securities and Exchange Commission (SEC) is an independent federal government agency responsible for protecting investors, maintaining fair and orderly functioning of securities markets and facilitating capital formation. It was created by Congress in 1934 as the first federal regulator of securities markets. The SEC promotes full public disclosure, protects investors against fraudulent and manipulative practices in the market, and monitors corporate takeover actions in the United States.

SECURITIES AND EXCHANGE COMMISSION (SEC) RULE 15C315c3-1: An SEC rule setting capital requirements for brokers and dealers. Under Rule 15c3-1, a broker or dealer must have sufficient liquidity in order to cover the most pressing obligations. This is defined as having a certain amount of liquidity as a percentage of the broker/dealer's total obligations. If the percentage falls below a certain point, the broker or dealer may not be allowed to take on new clients and may have restrictions placed on dealings with current client.

STRUCTURED NOTE: A complex, fixed income instrument, which pays interest, based on a formula tied to other interest rates, commodities or indices. Examples include inverse floating rate notes which have coupons that increase when other interest rates are falling, and which fall when other interest rates are rising, and "dual index floaters," which pay interest based on the relationship between two other interest rates - for example, the yield on the ten-year Treasury note minus the Libor rate. Issuers of such notes lock in a reduced cost of borrowing by purchasing interest rate swap agreements.

SUPRANATURAL: A Supranational is a multi-national organization whereby member states transcend national boundaries or interests to share in the decision making to promote economic development in the member countries.

TOTAL RATE OF RETURN: A measure of a portfolio's performance over time. It is the internal rate of return, which equates the beginning value of the portfolio with the ending value; it includes interest earnings, realized and unrealized gains, and losses in the portfolio.

U.S. TREASURY OBLIGATIONS: Securities issued by the U.S. Treasury and backed by the full faith and credit of the United States. Treasuries are considered to have no credit risk and are the benchmark for interest rates on all other securities in the US and overseas. The Treasury issues both discounted securities and fixed coupon notes and bonds.

All securities issued with initial maturities of one year or less are issued as discounted instruments and are called Treasury bills. The Treasury currently issues three- and six-month T-bills at regular weekly auctions. It also issues "cash management" bills as needed to smooth out cash flows.

All securities issued with initial maturities of two to ten years are called Treasury notes and pay interest semi-annually.

TREASURY BONDS: All securities issued with initial maturities greater than ten years are called Treasury bonds. Like Treasury notes, they pay interest semi-annually.

UNIFORM NET CAPITAL RULE: Securities and Exchange Commission requirement that member firms as well as nonmember broker-dealers in securities maintain a maximum ratio of indebtedness to liquid capital of 15 to 1; also called net capital rule and net capital ratio. Indebtedness covers all money owed to a firm, including margin loans and commitments to purchase securities, one reason new public issues are spread among members of underwriting syndicates. Liquid capital includes cash and assets easily converted into cash.

YIELD TO MATURITY: The annualized internal rate of return on an investment which equates the expected cash flows from the investment to its cost.

City of Brea

COUNCIL COMMUNICATION

TO: Honorable Mayor and City Council Members

FROM: Bill Gallardo, City Manager

DATE: 08/17/2021

SUBJECT: Monthly Report of Cash Investments for the City of Brea for Period Ended June 30, 2021

RECOMMENDATION

Receive and file.

BACKGROUND/DISCUSSION

The Monthly Report of Cash and Investments is in accordance with Government Code Sections (GCS) 41004 and 53607 and contains information on the cash and investment activities for the month of June 2021. Cash for day-to-day activities is deposited in the demand and interest-bearing checking accounts. The Local Agency Investment Fund (LAIF) is used for short term investment and functions like a savings account. The City's managed investment portfolio is for longer-term investments which are managed through Chandler Asset Management (Chandler). Together, the short and long-term investment accounts represent the City's investment portfolio.

Attachment A includes a Cash and Investment Information Summary and Monthly Account Statement prepared by Chandler for invested funds. The book value is the cost plus or minus amortization/accretion. As of June 30, 2021, the total market value of the managed investment portfolio, including accrued interest, was $93,846,505.70 as compared to $94,041,781.82 at May 31, 2021. The weighted average investment yield for June 30, 2021 was 1.51%, which was slightly less than the prior month. The City's Local Agency Investment Fund (LAIF) had a total market value, including accrued interest of $13,595,671.90 at June 30, 2021. This brings the total value of the City's investment portfolio as of June 30, 2021 to $107,442,177.60 as compared to $111,133,896.34 at May 31, 2021.

The City has restricted cash and investments held in the post-employment benefits trust account administered by PARS (PARS account), which are managed by HighMark Capital (HighMark) and the City's various bond reserve accounts which are managed by Chandler. Attachment A includes a monthly statement from US Bank for the PARS account as well as a portfolio report from Chandler for each bond reserve account that is invested. As of June 30, 2021, the market value of the PARS account, including short-term cash and accrued interest was $11,003,079.92 compared to $10,888,174.09 from the prior month. All other restricted cash investments (bond reserve accounts), including short-term cash and accrued interest, was $3,400,280.00 in comparison to $1,134,368.65 from the prior month.

Pursuant to the City's investment policy, all City investments, with the exception of LAIF, direct

time certificates of deposits and money market mutual funds, are held by third-party custodians, The Bank of New York Mellon Trust Company, N.A. (BNY) for accounts managed by Chandler and US Bank for the PARS account managed by HighMark which act as agents of the City. These financial institutions are not a counter party to the investment transaction and all securities are held in the name of the City of Brea. The custodial accounts have been reconciled to the par value of the applicable portfolio report for the month. The City of Brea has sufficient cash flow to meet its expected expenditures for the next six months.

COMMISSION/COMMITTEE RECOMMENDATION

On July 26, 2021, the Investment Advisory Committee reviewed the Monthly Report of Investments and recommended that the City Council receive and file.

FISCAL IMPACT/SUMMARY

During the month of June, the total value of the City's investment portfolio decreased by $3,691,718.74. The decrease was primarily due to funds being sent to the City's bond trustee in anticipation of debt service payments for the 2004 and 2010 Refunding Lease Revenue Bonds as well as the 2014, 2019 and 2020 Water Bonds. The City's PARS account increased by $114,905.83 due to market rate adjustments and the City's bond reserve accounts increased by $2,265,911.35 due to the aforementioned debt service payments.

RESPECTFULLY SUBMITTED:

William Gallardo, City Manager
Prepared by: Alicia Brenner, Senior Fiscal Analyst
Concurrence: Cindy Russell, Administrative Services Director

Attachments

Attachment A

City of Brea

Cash and Investment Information

June 30, 2021

			Book Value		Market Value*
Demand and Interest-Bearing Checking Accounts	Citizen's Bank	**$**	**3,252,986.35**	**$**	**3,252,986.35**
Local Agency Investment Fund	LAIF	**$**	**13,584,265.99**	**$**	**13,595,671.90**
Managed Investment Portfolio - CHANDLER	Chandler/BNY	**$**	**91,741,470.26**	**$**	**93,846,505.70**
PARS Post-Employment Benefits Trust**	Highmark/US Bank	**$**	**8,748,614.29**	**$**	**11,003,079.92**
Fiscal Agent Cash & Investments**					
2010 Lease Revenue Bonds	Chandler/BNY	$	262,772.85	$	262,772.85
2014 Downtown Brea Public Improvements CFD Bonds (CFD 1996-1)	Chandler/BNY	$	163,005.80	$	163,005.80
2014 Water Revenue Bonds	Chandler/BNY	$	424,350.00	$	424,350.00
2017 Brea Plaza Public Improvements CFD Bonds (CFD 2008-2)	Chandler/BNY	$	672,736.19	$	689,130.34
2019 Olinda Ranch Public Improvements CFD Bonds (CFD 1997-1)	Chandler/BNY	$	18.15	$	18.15
2019 Water Revenue Bonds	Chandler/BNY	$	1,275,050.00	$	1,275,050.00
2020 Water Revenue Refunding Bonds	Chandler/BNY	$	585,952.86	$	585,952.86
Sub-total - Fiscal Agent Cash & Investments		**$**	**3,383,885.85**	**$**	**3,400,280.00**
Report Grand Total		**$**	**120,711,222.74**	**$**	**125,098,523.87**

* Includes accrued interest on invested funds

** Reserve Fund

City of Brea
Cash and Investment Information
June 30, 2021

	Fiscal Agent Cash & Investments Detail		Book Value		Market Value
10129	2010 Lease Revenue Bonds - **CHANDLER**	$	262,772.33	$	262,772.33
	Short-Term Treasury Funds - **BNY**	$	0.52	$	0.52
	Sub-total	**$**	**262,772.85**	**$**	**262,772.85**
	2014 Downtown Brea Public Improvements CFD Bonds **- CHANDLER**	$	-	$	-
	Short-Term Treasury Funds - **BNY**	$	163,005.80	$	163,005.80
	Sub-total	**$**	**163,005.80**	**$**	**163,005.80**
	2014 Water Revenue Bonds - **CHANDLER**	$	-	$	-
	Short-Term Treasury Funds - **BNY**	$	424,350.00	$	424,350.00
	Sub-total	**$**	**424,350.00**	**$**	**424,350.00**
10600	2017 Brea Plaza Public Improvements CFD Bonds (CFD 2008-2) - **CHANDLER**	$	668,509.51	$	684,903.66
	Short-Term Treasury Funds - **BNY**	$	4,226.68	$	4,226.68
	Sub-total	**$**	**672,736.19**	**$**	**689,130.34**
	2019 Olinda Ranch Public Improvements Bonds (CFD 1997-1) **- CHANDLER**	$	-	$	-
	Short-Term Treasury Funds - **BNY**	$	18.15	$	18.15
	Sub-total	**$**	**18.15**	**$**	**18.15**
	2019 Water Revenue Bonds - **CHANDLER**	$	-	$	-
	Short-Term Treasury Funds - **BNY**	$	1,275,050.00	$	1,275,050.00
	Sub-total	**$**	**1,275,050.00**	**$**	**1,275,050.00**
	2020 Water Revenue Refunding Bonds - **CHANDLER**	$	-	$	-
	Short-Term Treasury Funds - **BNY**	$	585,952.86	$	585,952.86
	Sub-total	**$**	**585,952.86**	**$**	**585,952.86**
Report Grand Total		**$**	**3,383,885.85**	**$**	**3,400,280.00**

City of Brea Laif

Account #10164

Portfolio Summary

As of June 30, 2021

PORTFOLIO CHARACTERISTICS

Average Modified Duration	0.00
Average Coupon	0.25%
Average Purchase YTM	0.25%
Average Market YTM	0.25%
Average S&P/Moody Rating	NR/NR
Average Final Maturity	0.00 yrs
Average Life	0.00 yrs

ACCOUNT SUMMARY

	Beg. Values as of 5/31/21	End Values as of 6/30/21
Market Value	17,084,266	13,584,266
Accrued Interest	7,849	11,405
Total Market Value	**17,092,115**	**13,595,671**
Income Earned	3,940	3,557
Cont/WD		-3,500,000
Par	17,084,266	13,584,266
Book Value	17,084,266	13,584,266
Cost Value	17,084,266	13,584,266

TOP ISSUERS

Local Agency Investment Fund	100.0%
Total	**100.0%**

SECTOR ALLOCATION

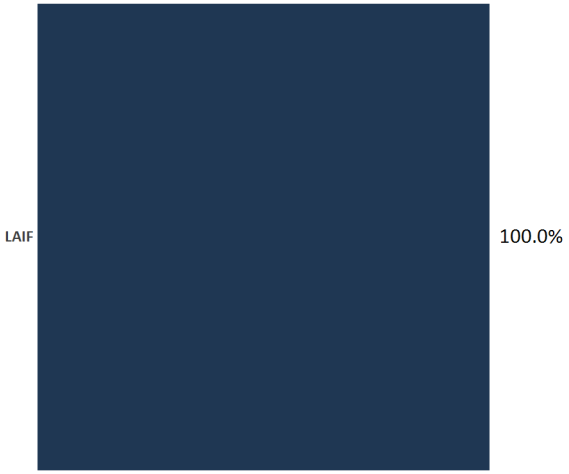

MATURITY DISTRIBUTION

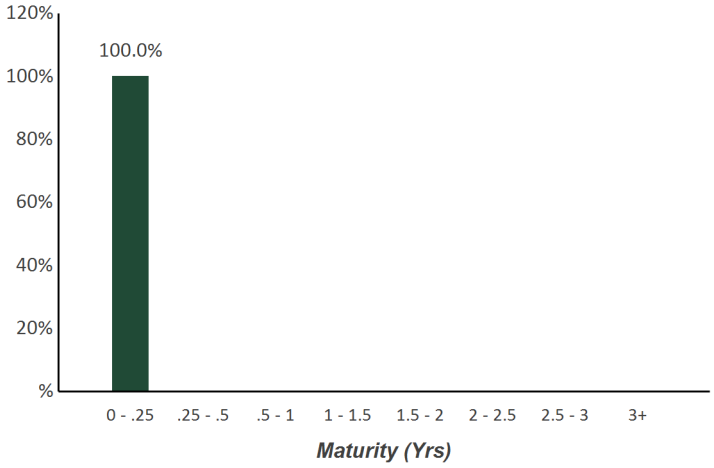

CREDIT QUALITY (S&P)

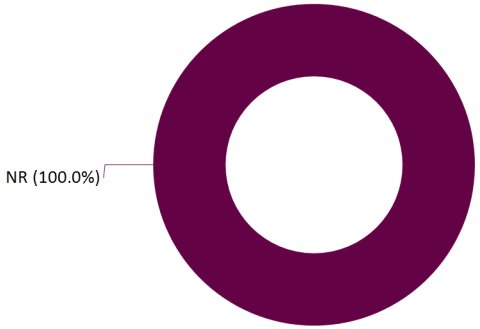

PERFORMANCE REVIEW

					Annualized				
TOTAL RATE OF RETURN	**1M**	**3M**	**YTD**	**1YR**	**2YRS**	**3YRS**	**5YRS**	**10YRS**	**2/28/2012**
City of Brea Laif	0.02%	0.09%	0.20%	0.62%	1.35%	1.71%	1.44%	N/A	N/A

City of Brea Laif

Account #10164

Holdings Report

As of June 30, 2021

CUSIP	Security Description	Par Value/Units	Purchase Date Book Yield	Cost Value Book Value	Mkt Price Mkt YTM	Market Value Accrued Int.	% of Port. Gain/Loss	Moody/S&P Fitch	Maturity Duration
LAIF									
90LAIF$00	Local Agency Investment Fund State Pool	13,584,265.99	Various 0.25%	13,584,265.99 13,584,265.99	1.00 0.25%	13,584,265.99 11,405.20	100.00% 0.00	NR / NR NR	0.00 0.00
Total LAIF		**13,584,265.99**	**0.25%**	**13,584,265.99** **13,584,265.99**	**0.25%**	**13,584,265.99** **11,405.20**	**100.00%** **0.00**	**NR / NR** **NR**	**0.00** **0.00**
TOTAL PORTFOLIO		**13,584,265.99**	**0.25%**	**13,584,265.99** **13,584,265.99**	**0.25%**	**13,584,265.99** **11,405.20**	**100.00%** **0.00**	**NR / NR** **NR**	**0.00** **0.00**
TOTAL MARKET VALUE PLUS ACCRUED						**13,595,671.19**			

City of Brea Laif

Account #10164

Transaction Ledger

As of June 30, 2021

Transaction Type	Settlement Date	CUSIP	Quantity	Security Description	Price	Acq/Disp Yield	Amount	Interest Pur/Sold	Total Amount	Gain/Loss
DISPOSITIONS										
Security Withdrawal	06/17/2021	90LAIF$00	1,500,000.00	Local Agency Investment Fund State Pool	1.000		1,500,000.00	0.00	1,500,000.00	0.00
Security Withdrawal	06/30/2021	90LAIF$00	2,000,000.00	Local Agency Investment Fund State Pool	1.000		2,000,000.00	0.00	2,000,000.00	0.00
Subtotal			**3,500,000.00**				**3,500,000.00**	**0.00**	**3,500,000.00**	**0.00**
TOTAL DISPOSITIONS			**3,500,000.00**				**3,500,000.00**	**0.00**	**3,500,000.00**	**0.00**

City of Brea Laif

Account #10164

Income Earned

As of June 30, 2021

CUSIP	Security Description	Trade Date Settle Date Units	Book Value: Begin Book Value: Acq Book Value: Disp Book Value: End	Prior Accrued Inc. Received Ending Accrued Total Interest	Accr. Of Discount Amort. Of Premium Net Accret/Amort Income Earned	Total Income
LOCAL AGENCY INVESTMENT FUND						
90LAIF$00	Local Agency Investment Fund	06/30/2019	17,084,265.99	7,848.53	0.00	3,556.67
	State Pool	06/30/2019	0.00	0.00	0.00	
		13,584,265.99	3,500,000.00	11,405.20	0.00	
			13,584,265.99	3,556.67	3,556.67	
			17,084,265.99	**7,848.53**	**0.00**	
			0.00	**0.00**	**0.00**	
			3,500,000.00	**11,405.20**	**0.00**	
Total Local Agency Investment Fund		**13,584,265.99**	**13,584,265.99**	**3,556.67**	**3,556.67**	**3,556.67**
			17,084,265.99	**7,848.53**	**0.00**	
			0.00	**0.00**	**0.00**	
			3,500,000.00	**11,405.20**	**0.00**	
TOTAL PORTFOLIO		**13,584,265.99**	**13,584,265.99**	**3,556.67**	**3,556.67**	**3,556.67**

City of Brea Laif

Account #10164

Cash Flow Report

As of June 30, 2021

Payment Date	Transaction Type	CUSIP	Quantity	Security Description	Principal Amount	Income	Total Amount
07/15/2021	Dividend	90LAIF$00	1,352,453,510.69	Local Agency Investment Fund State Pool	0.00	11,287.08	11,287.08
JUL 2021					**0.00**	**11,287.08**	**11,287.08**
TOTAL					**0.00**	**11,287.08**	**11,287.08**

Important Disclosures

Chandler Asset Management, Inc. (“Chandler”) is an SEC registered investment adviser. For additional information about our firm, please see our current disclosures (Form ADV). To obtain a copy of our current disclosures, you may contact your client service representative by calling the number on the front of this statement or you may visit our website at www.chandlerasset.com.

Information contained in this monthly statement is confidential and is provided for informational purposes only and should not be construed as specific investment or legal advice. The information contained herein was obtained from sources believed to be reliable as of the date of this statement, but may become outdated or superseded at any time without notice.

Custody: Your qualified custodian bank maintains control of all assets reflected in this statement and we urge you to compare this statement to the one you receive from your qualified custodian. Chandler does not have any authority to withdraw or deposit funds from/to the custodian account.

Valuation: Prices are provided by IDC, an independent pricing source. In the event IDC does not provide a price or if the price provided is not reflective of fair market value, Chandler will obtain pricing from an alternative approved third party pricing source in accordance with our written valuation policy and procedures. Our valuation procedures are also disclosed in Item 5 of our Form ADV Part 2A.

Performance: Performance results are presented gross-of-advisory fees and represent the client’s Total Return. The deduction of advisory fees lowers performance results. These results include the reinvestment of dividends and other earnings. Past performance may not be indicative of future results. Therefore, clients should not assume that future performance of any specific investment or investment strategy will be profitable or equal to past performance levels. All investment strategies have the potential for profit or loss. Economic factors, market conditions or changes in investment strategies, contributions or withdrawals may materially alter the performance and results of your portfolio.

Source ice Data Indices, LLC ("ICE"), used with permission. ICE PERMITS USE OF THE ICE INDICES AND RELATED DATA ON AN "AS IS" BASIS; ICE, ITS AFFILIATES AND THEIR RESPECTIVE THIRD PARTY SUPPLIERS DISCLAIM ANY AND ALL WARRANTIES AND REPRESENTATIONS, EXPRESS AND/OR IMPLIED, INCLUDING ANY WARRANTIES OF MERCHANTABILITY OR FITNESS FOR A PARTICULAR PURPOSE OR USE, INCLUDING THE INDICES, INDEX DATA AND ANY DATA INCLUDED IN, RELATED TO, OR DERIVED THEREFROM. NEITHER ICE DATA, ITS AFFILIATES OR THEIR RESPECTIVE THIRD PARTY PROVIDERS GUARANTEE THE QUALITY, ADEQUACY, ACCURACY, TIMELINESS OR COMPLETENESS OF THE INDICES OR THE INDEX DATA OR ANY COMPONENT THEREOF, AND THE INDICES AND INDEX DATA AND ALL COMPONENTS THEREOF ARE PROVIDED ON AN "AS IS" BASIS AND LICENSEE'S USE IS AT LICENSEE'S OWN RISK. ICE DATA, ITS AFFILIATES AND THEIR RESPECTIVE THIRD PARTY DO NOT SPONSOR, ENDORSE, OR RECOMMEND CHANDLER, OR ANY OF ITS PRODUCTS OR SERVICES.

Index returns assume reinvestment of all distributions. Historical performance results for investment indexes generally do not reflect the deduction of transaction and/or custodial charges or the deduction of an investment management fee, the incurrence of which would have the effect of decreasing historical performance results. It is not possible to invest directly in an index.

Ratings: Ratings information have been provided by Moody’s, S&P and Fitch through data feeds we believe to be reliable as of the date of this statement, however we cannot guarantee its accuracy.

Security level ratings for U.S. Agency issued mortgage-backed securities (“MBS”) reflect the issuer rating because the securities themselves are not rated. The issuing U.S. Agency guarantees the full and timely payment of both principal and interest and carries a AA+/Aaa/AAA by S&P, Moody’s and Fitch respectively.

City of Brea

Account #120

Portfolio Summary

As of June 30, 2021

PORTFOLIO CHARACTERISTICS

Average Modified Duration	2.60
Average Coupon	1.64%
Average Purchase YTM	1.51%
Average Market YTM	0.49%
Average S&P/Moody Rating	AA/Aa1
Average Final Maturity	2.88 yrs
Average Life	2.66 yrs

ACCOUNT SUMMARY

	Beg. Values as of 5/31/21	End Values as of 6/30/21
Market Value	93,666,279	93,510,693
Accrued Interest	375,503	335,812
Total Market Value	**94,041,782**	**93,846,506**
Income Earned	121,004	118,372
Cont/WD		0
Par	91,259,310	91,450,839
Book Value	91,551,146	91,741,470
Cost Value	91,685,842	91,896,660

TOP ISSUERS

Government of United States	26.1%
Federal National Mortgage Assoc	15.5%
Federal Home Loan Bank	10.9%
Federal Home Loan Mortgage Corp	10.1%
Inter-American Dev Bank	4.3%
JP Morgan Chase & Co	1.9%
Bank of America Corp	1.8%
Honda ABS	1.7%
Total	**72.2%**

SECTOR ALLOCATION

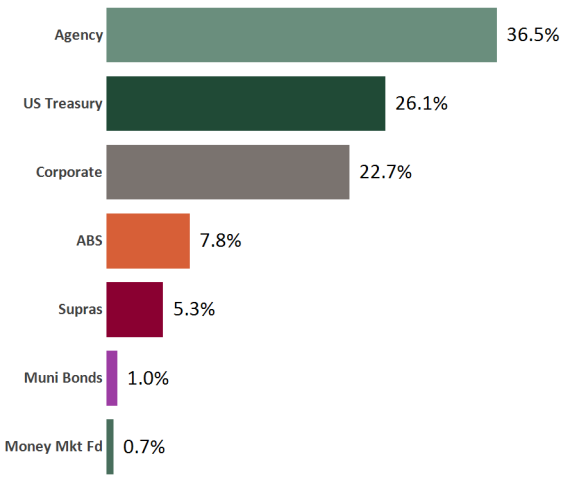

MATURITY DISTRIBUTION

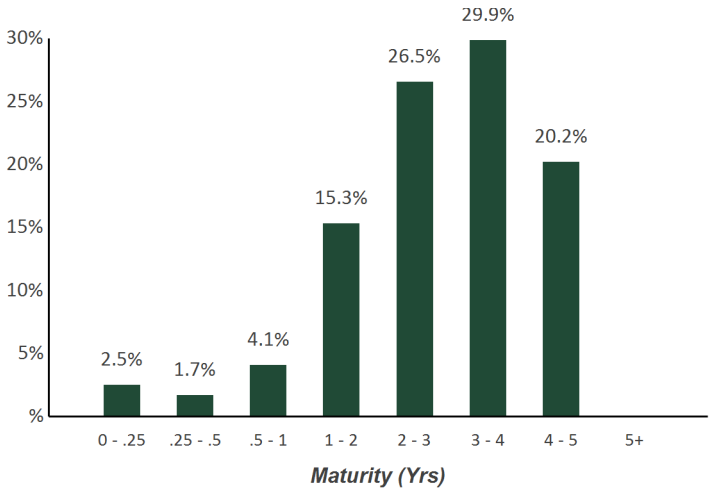

CREDIT QUALITY (S&P)

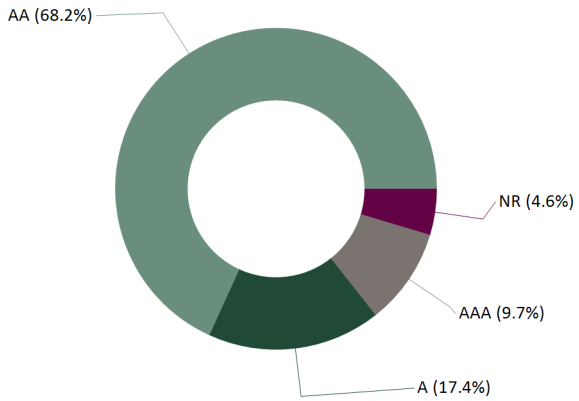

PERFORMANCE REVIEW

					Annualized				
TOTAL RATE OF RETURN	**1M**	**3M**	**YTD**	**1YR**	**2YRS**	**3YRS**	**5YRS**	**10YRS**	**4/30/1996**
City of Brea	-0.21%	0.21%	-0.31%	0.24%	2.77%	3.47%	2.06%	1.89%	3.77%
ICE BAML 1-5 Yr US Treasury/Agency Index*	-0.22%	0.11%	-0.41%	-0.25%	2.44%	3.25%	1.77%	1.59%	3.41%
ICE BAML 1-5 Yr US Issuers Corp/Govt Rtd AAA-A Idx	-0.21%	0.16%	-0.38%	-0.09%	2.58%	3.38%	1.90%	1.73%	N/A

**ICE BAML 1-Yr US Treasury Bill Index to 9/30/01,*

Statement of Compliance

As of June 30, 2021

City of Brea

Assets managed by Chandler Asset Management are in full compliance with state law and with the Client's investment policy

Category	Standard	Comment
U.S Treasuries	No limitations; Bills, Notes, and Bonds	*Complies*
Federal Agencies	25% max per issuer; 5% max in callables bonds issued by Agencies; U.S. Government Agency securities and instrumentality of government-sponsored corporations	*Complies*
Supranational Obligations	"AA" rated or higher by a NRSRO; 15% maximum; 5% max per issuer	*Complies*
Municipal Securities	5% max issuer; Other investments that are legal investments through the State of California Government Code	*Complies*
Corporate Medium Term Notes	"A" rated or better by a NRSRO; 30% maximum; 5% max per issuer	*Complies*
Pass Through Securities, Asset-Backed Securities (ABS), CMOs	"AA" rated or higher by a NRSRO; 20% maximum (combined), 10% maximum (ABS); 5% max per issuer	*Complies*
Negotiable Certificates of Deposit (NCD)	30% maximum; 5% max per issuer	*Complies*
Certificates of Deposit (CDs)/ Time Deposits (TDs)	5% max issuer; FDIC Insured and/or Collateralized	*Complies*
Banker's Acceptances	40% maximum; 5% max issuer; 180 days max maturity	*Complies*
Commercial Paper	A-1/P-1 by S&P and Moody's; 25% maximum; 5% max per issuer; 270 days max maturity	*Complies*
Money Market Funds	Highest rating by two NRSROs; 20% maximum; 5% max per fund	*Complies*
Local Agency Investment Fund (LAIF)	40%;<60%, with OCIP	*Complies*
OCIP/ County Pool	40%;<60%, with LAIF	*Complies*
Repurchase Agreements	5% max issuer; 1 year max maturity	*Complies*
Prohibited	Derivatives, inverse floaters, range notes, or interest-only strips derived from a pool of mortgages; any security that could result in a zero interest accrual if held to maturity	*Complies*
Downgrade	If a security owned by the City is downgraded to a level below the requirements of the policy, making the security ineligible for additional purchases, the following steps will be taken: -Any actions taken related to the downgrade by the investment manager will be communicated to the City Treasurer and the Administrative Services Director within two (2) business days; -If a decision is made to retain the security, the credit situation will be monitored and reported to the City Council.	*Complies*
Max Per Issuer	5% max per issuer, with the exception of U.S. Treasuries, U.S. Federal Government Agency obligations, Approved State and County investment pools	*Complies*
Maximum Maturity	5 years	*Complies*

City of Brea

Account #120

Reconciliation Summary

As of June 30, 2021

BOOK VALUE RECONCILIATION		
BEGINNING BOOK VALUE		**$91,551,146.21**
Acquisition		
+ Security Purchases	$3,168,555.80	
+ Money Market Fund Purchases	$2,584,130.79	
+ Money Market Contributions	$138,568.62	
+ Security Contributions	$0.00	
+ Security Transfers	$0.00	
Total Acquisitions		**$5,891,255.21**
Dispositions		
- Security Sales	$2,453,480.45	
- Money Market Fund Sales	$2,983,807.84	
- MMF Withdrawals	$138,568.62	
- Security Withdrawals	$0.00	
- Security Transfers	$0.00	
- Other Dispositions	$0.00	
- Maturites	$0.00	
- Calls	$0.00	
- Principal Paydowns	$148,794.40	
Total Dispositions		**$5,724,651.31**
Amortization/Accretion		
+/- Net Accretion	($8,540.94)	
		($8,540.94)
Gain/Loss on Dispositions		
+/- Realized Gain/Loss	$32,261.09	
		$32,261.09
ENDING BOOK VALUE		**$91,741,470.26**

CASH TRANSACTION SUMMARY		
BEGINNING BALANCE		**$1,015,388.20**
Acquisition		
Contributions	$138,568.62	
Security Sale Proceeds	$2,453,480.45	
Accrued Interest Received	$21,794.37	
Interest Received	$145,056.49	
Dividend Received	$5.08	
Principal on Maturities	$0.00	
Interest on Maturities	$0.00	
Calls/Redemption (Principal)	$0.00	
Interest from Calls/Redemption	$0.00	
Principal Paydown	$148,794.40	
Total Acquisitions	**$2,907,699.41**	
Dispositions		
Withdrawals	$138,568.62	
Security Purchase	$3,168,555.80	
Accrued Interest Paid	$252.04	
Total Dispositions	**$3,307,376.46**	
ENDING BOOK VALUE		**$615,711.15**

Holdings Report

As of June 30, 2021

CUSIP	Security Description	Par Value/Units	Purchase Date Book Yield	Cost Value Book Value	Mkt Price Mkt YTM	Market Value Accrued Int.	% of Port. Gain/Loss	Moody/S&P Fitch	Maturity Duration
ABS									
43815HAC1	Honda Auto Receivables Trust 2018-3 A3 2.95% Due 8/22/2022	82,187.16	08/21/2018 2.98%	82,175.89 82,183.93	100.52 0.30%	82,613.55 67.35	0.09% 429.62	Aaa / NR AAA	1.15 0.20
89238TAD5	Toyota Auto Receivables Trust 2018-B A3 2.96% Due 9/15/2022	109,384.72	07/25/2019 2.31%	110,542.66 109,831.09	100.40 0.26%	109,819.63 143.90	0.12% (11.46)	Aaa / AAA NR	1.21 0.15
47788EAC2	John Deere Owner Trust 2018-B A3 3.08% Due 11/15/2022	66,633.54	07/18/2018 3.10%	66,628.49 66,631.93	100.51 0.14%	66,976.30 91.21	0.07% 344.37	Aaa / NR AAA	1.38 0.17
47789JAD8	John Deere Owner Trust 2019-A A3 2.91% Due 7/17/2023	314,539.91	06/24/2020 0.83%	322,808.87 318,886.41	101.15 0.18%	318,170.02 406.80	0.34% (716.39)	Aaa / NR AAA	2.05 0.42
43815NAC8	Honda Auto Receivables Trust 2019-3 A3 1.78% Due 8/15/2023	509,704.46	08/20/2019 1.79%	509,700.23 509,702.79	100.92 0.23%	514,397.31 403.23	0.55% 4,694.52	Aaa / AAA NR	2.13 0.59
58769EAC2	Mercedes-Benz Auto Lease Trust 2020-B A3 0.4% Due 11/15/2023	280,000.00	09/15/2020 0.40%	279,985.80 279,990.53	100.18 0.25%	280,496.44 49.78	0.30% 505.91	NR / AAA AAA	2.38 1.16
477870AC3	John Deere Owner Trust 2019-B A3 2.21% Due 12/15/2023	196,677.83	07/16/2019 2.23%	196,636.08 196,654.50	101.30 0.09%	199,242.31 193.18	0.21% 2,587.81	Aaa / NR AAA	2.46 0.61
92348AAA3	Verizon Owner Trust 2019-C A1A 1.94% Due 4/22/2024	370,000.00	10/01/2019 1.95%	369,971.47 369,982.35	101.41 0.22%	375,226.25 219.33	0.40% 5,243.90	NR / AAA AAA	2.81 0.82
65479JAD5	Nissan Auto Receivables Owner 2019-C A3 1.93% Due 7/15/2024	980,000.00	Various 1.71%	984,828.76 983,471.53	101.24 0.29%	992,188.26 840.62	1.06% 8,716.73	Aaa / AAA NR	3.04 0.76
43813DAC2	Honda Auto Receivables 2020-2 A3 0.82% Due 7/15/2024	280,000.00	05/18/2020 0.83%	279,977.96 279,983.80	100.64 0.27%	281,796.20 102.04	0.30% 1,812.40	Aaa / AAA NR	3.04 1.15
47789KAC7	John Deere Owner Trust 2020-A A3 1.1% Due 8/15/2024	460,000.00	03/04/2020 1.11%	459,971.89 459,980.18	100.77 0.34%	463,540.62 224.89	0.49% 3,560.44	Aaa / NR AAA	3.13 1.01
43813KAC6	Honda Auto Receivables Trust 2020-3 A3 0.37% Due 10/18/2024	465,000.00	09/22/2020 0.38%	464,931.69 464,948.10	100.13 0.28%	465,597.99 62.13	0.50% 649.89	NR / AAA AAA	3.30 1.43
47787NAC3	John Deere Owner Trust 2020-B A3 0.51% Due 11/15/2024	215,000.00	07/14/2020 0.52%	214,967.23 214,976.09	100.25 0.29%	215,533.42 48.73	0.23% 557.33	Aaa / NR AAA	3.38 1.13
89236XAC0	Toyota Auto Receivables 2020-D A3 0.35% Due 1/15/2025	370,000.00	10/06/2020 0.36%	369,931.07 369,942.64	100.09 0.28%	370,335.96 57.56	0.39% 393.32	NR / AAA AAA	3.55 1.32

Holdings Report

As of June 30, 2021

CUSIP	Security Description	Par Value/Units	Purchase Date Book Yield	Cost Value Book Value	Mkt Price Mkt YTM	Market Value Accrued Int.	% of Port. Gain/Loss	Moody/S&P Fitch	Maturity Duration
ABS									
92290BAA9	Verizon Owner Trust 2020-B A 0.47% Due 2/20/2025	650,000.00	08/04/2020 0.48%	649,863.50 649,890.17	100.27 0.30%	651,747.85 93.35	0.69% 1,857.68	Aaa / NR AAA	3.65 1.58
43813GAC5	Honda Auto Receivables Trust 2021-1 A3 0.27% Due 4/21/2025	230,000.00	02/17/2021 0.27%	229,995.79 229,996.27	99.93 0.32%	229,837.62 17.25	0.24% (158.65)	Aaa / NR AAA	3.81 1.49
44891RAC4	Hyundai Auto Receivables Trust 2020-C A3 0.38% Due 5/15/2025	470,000.00	10/20/2020 0.39%	469,891.76 469,913.86	100.07 0.34%	470,312.55 79.38	0.50% 398.69	NR / AAA AAA	3.88 1.76
89240BAC2	Toyota Auto Receivables Owners 2021-A A3 0.26% Due 5/15/2025	810,000.00	02/02/2021 0.27%	809,849.66 809,868.67	99.91 0.32%	809,300.16 93.60	0.86% (568.51)	Aaa / NR AAA	3.88 1.58
44933LAC7	Hyundai Auto Receivables Trust 2021-A A3 0.38% Due 9/15/2025	400,000.00	04/20/2021 0.38%	399,957.92 399,960.34	99.97 0.40%	399,874.80 67.56	0.43% (85.54)	NR / AAA AAA	4.21 2.11
Total ABS		**7,259,127.62**	**0.95%**	**7,272,616.72 7,266,795.18**	**0.28%**	**7,297,007.24 3,261.89**	**7.78% 30,212.06**	**Aaa / AAA AAA**	**3.16 1.16**
AGENCY									
3130A8QS5	FHLB Note 1.125% Due 7/14/2021	1,085,000.00	10/04/2016 1.33%	1,074,974.60 1,084,925.18	100.04 0.13%	1,085,420.98 5,662.34	1.16% 495.80	Aaa / AA+ AAA	0.04 0.04
3130AF5B9	FHLB Note 3% Due 10/12/2021	1,350,000.00	11/29/2018 2.91%	1,353,402.00 1,350,334.68	100.83 0.08%	1,361,171.25 8,887.50	1.46% 10,836.57	Aaa / AA+ NR	0.28 0.28
3130A3KM5	FHLB Note 2.5% Due 12/9/2022	775,000.00	08/28/2018 2.83%	764,808.75 771,570.32	103.32 0.19%	800,747.05 1,184.03	0.85% 29,176.73	Aaa / AA+ NR	1.44 1.42
3135G0T94	FNMA Note 2.375% Due 1/19/2023	625,000.00	03/14/2018 2.73%	615,087.50 621,824.64	103.37 0.20%	646,070.63 6,679.69	0.70% 24,245.99	Aaa / AA+ AAA	1.56 1.52
3137EAER6	FHLMC Note 0.375% Due 5/5/2023	1,660,000.00	05/05/2020 0.39%	1,659,302.80 1,659,570.71	100.25 0.24%	1,664,198.14 968.33	1.77% 4,627.43	Aaa / AA+ AAA	1.85 1.84
3137EAEN5	FHLMC Note 2.75% Due 6/19/2023	1,200,000.00	07/20/2018 2.86%	1,193,976.00 1,197,586.37	104.91 0.25%	1,258,880.40 1,100.00	1.34% 61,294.03	Aaa / AA+ AAA	1.97 1.93
3137EAEV7	FHLMC Note 0.25% Due 8/24/2023	1,025,000.00	08/19/2020 0.28%	1,023,954.50 1,024,253.49	99.98 0.26%	1,024,757.08 903.99	1.09% 503.59	Aaa / AA+ AAA	2.15 2.14
313383YJ4	FHLB Note 3.375% Due 9/8/2023	1,200,000.00	10/29/2018 3.08%	1,215,756.00 1,207,100.42	106.58 0.35%	1,278,948.00 12,712.50	1.38% 71,847.58	Aaa / AA+ NR	2.19 2.11

Holdings Report

As of June 30, 2021

CUSIP	Security Description	Par Value/Units	Purchase Date Book Yield	Cost Value Book Value	Mkt Price Mkt YTM	Market Value Accrued Int.	% of Port. Gain/Loss	Moody/S&P Fitch	Maturity Duration
AGENCY									
3135G0U43	FNMA Note 2.875% Due 9/12/2023	1,500,000.00	06/21/2019 1.89%	1,559,805.00 1,531,163.80	105.69 0.28%	1,585,297.50 13,057.29	1.70% 54,133.70	Aaa / AA+ AAA	2.20 2.13
3135G06H1	FNMA Note 0.25% Due 11/27/2023	1,610,000.00	11/23/2020 0.29%	1,608,164.60 1,608,529.34	99.81 0.33%	1,606,971.59 380.14	1.71% (1,557.75)	Aaa / AA+ AAA	2.41 2.40
3130A0F70	FHLB Note 3.375% Due 12/8/2023	1,075,000.00	Various 2.74%	1,106,057.50 1,090,447.23	107.34 0.35%	1,153,952.30 2,317.97	1.23% 63,505.07	Aaa / AA+ AAA	2.44 2.36
3130AB3H7	FHLB Note 2.375% Due 3/8/2024	1,500,000.00	04/29/2019 2.37%	1,500,105.00 1,500,058.06	105.49 0.32%	1,582,344.00 11,182.29	1.70% 82,285.94	Aaa / AA+ NR	2.69 2.60
3130A1XJ2	FHLB Note 2.875% Due 6/14/2024	1,500,000.00	06/18/2019 1.96%	1,564,890.20 1,538,428.39	106.99 0.49%	1,604,857.51 2,036.46	1.71% 66,429.12	Aaa / AA+ NR	2.96 2.85
3130A2UW4	FHLB Note 2.875% Due 9/13/2024	1,200,000.00	09/13/2019 1.79%	1,262,028.00 1,239,787.70	107.44 0.53%	1,289,280.00 10,350.00	1.38% 49,492.30	Aaa / AA+ AAA	3.21 3.06
3135G0W66	FNMA Note 1.625% Due 10/15/2024	1,755,000.00	Various 1.49%	1,765,434.95 1,762,443.42	103.59 0.52%	1,818,008.01 6,020.63	1.94% 55,564.59	Aaa / AA+ AAA	3.30 3.20
3135G0X24	FNMA Note 1.625% Due 1/7/2025	1,875,000.00	Various 1.47%	1,888,349.75 1,884,696.19	103.56 0.60%	1,941,800.63 14,726.57	2.08% 57,104.44	Aaa / AA+ AAA	3.53 3.40
3137EAEP0	FHLMC Note 1.5% Due 2/12/2025	1,920,000.00	02/13/2020 1.52%	1,918,521.60 1,918,929.07	103.21 0.60%	1,981,589.76 11,120.00	2.12% 62,660.69	Aaa / AA+ AAA	3.62 3.51
3135G03U5	FNMA Note 0.625% Due 4/22/2025	1,510,000.00	04/22/2020 0.67%	1,506,889.40 1,507,627.83	99.91 0.65%	1,508,680.26 1,808.85	1.61% 1,052.43	Aaa / AA+ AAA	3.81 3.76
3135G04Z3	FNMA Note 0.5% Due 6/17/2025	1,800,000.00	Various 0.46%	1,802,513.00 1,802,483.52	99.41 0.65%	1,789,401.60 350.00	1.91% (13,081.92)	Aaa / AA+ AAA	3.97 3.92
3137EAEU9	FHLMC Note 0.375% Due 7/21/2025	1,800,000.00	Various 0.45%	1,793,673.60 1,794,745.32	98.63 0.72%	1,775,341.81 3,000.00	1.89% (19,403.51)	Aaa / AA+ AAA	4.06 4.01
3135G05X7	FNMA Note 0.375% Due 8/25/2025	1,800,000.00	Various 0.45%	1,793,460.00 1,794,163.30	98.56 0.73%	1,774,036.80 2,362.51	1.89% (20,126.50)	Aaa / AA+ AAA	4.16 4.10
3137EAEX3	FHLMC Note 0.375% Due 9/23/2025	1,805,000.00	Various 0.44%	1,799,651.55 1,800,387.37	98.47 0.74%	1,777,462.92 1,842.61	1.90% (22,924.45)	Aaa / AA+ AAA	4.24 4.18
3135G06G3	FNMA Note 0.5% Due 11/7/2025	1,825,000.00	Various 0.57%	1,819,098.50 1,819,844.58	98.91 0.75%	1,805,160.43 1,368.75	1.92% (14,684.15)	Aaa / AA+ AAA	4.36 4.29
Total Agency		**33,395,000.00**	**1.37%**	**33,589,904.80 33,510,900.93**	**0.47%**	**34,114,378.65 120,022.45**	**36.48% 603,477.72**	**Aaa / AA+ AAA**	**2.91 2.85**

Holdings Report

As of June 30, 2021

CUSIP	Security Description	Par Value/Units	Purchase Date Book Yield	Cost Value Book Value	Mkt Price Mkt YTM	Market Value Accrued Int.	% of Port. Gain/Loss	Moody/S&P Fitch	Maturity Duration
CORPORATE									
594918BP8	Microsoft Callable Note Cont 7/8/2021 1.55% Due 8/8/2021	590,000.00	Various 1.57%	589,298.90 589,985.41	100.02 0.49%	590,138.65 3,632.60	0.63% 153.24	Aaa / AAA AAA	0.11 0.02
69353RFE3	PNC Bank Callable Note Cont 6/28/2022 2.45% Due 7/28/2022	890,000.00	07/25/2017 2.45%	889,919.90 889,982.80	102.16 0.28%	909,185.73 9,267.13	0.98% 19,202.93	A2 / A A+	1.08 0.98
808513AT2	Charles Schwab Corp Callable Note Cont 12/25/2022 2.65% Due 1/25/2023	750,000.00	05/20/2019 2.73%	748,027.50 749,159.05	103.36 0.38%	775,226.25 8,612.50	0.84% 26,067.20	A2 / A A	1.57 1.45
24422ETG4	John Deere Capital Corp Note 2.8% Due 3/6/2023	650,000.00	Various 3.23%	637,699.50 645,646.06	104.19 0.30%	677,218.10 5,813.89	0.73% 31,572.04	A2 / A A	1.68 1.64
89236TJD8	Toyota Motor Credit Corp Note 0.4% Due 4/6/2023	275,000.00	04/06/2021 0.44%	274,777.25 274,802.68	100.03 0.39%	275,069.03 250.56	0.29% 266.35	A1 / A+ A+	1.77 1.76
06406RAG2	Bank of NY Mellon Corp Note 3.5% Due 4/28/2023	800,000.00	05/16/2019 2.78%	821,248.00 809,834.03	105.80 0.32%	846,379.20 4,900.00	0.91% 36,545.17	A1 / A AA-	1.83 1.78
037833AK6	Apple Inc Note 2.4% Due 5/3/2023	900,000.00	Various 3.18%	871,569.25 888,028.68	103.75 0.36%	933,734.71 3,480.00	1.00% 45,706.03	Aa1 / AA+ NR	1.84 1.80
931142EK5	Wal-Mart Stores Callable Note Cont 5/26/2023 3.4% Due 6/26/2023	904,000.00	04/26/2019 2.68%	928,769.60 915,560.26	105.98 0.25%	958,019.42 426.89	1.02% 42,459.16	Aa2 / AA AA	1.99 1.86
02665WCJ8	American Honda Finance Note 3.45% Due 7/14/2023	225,000.00	07/11/2018 3.49%	224,610.75 224,841.44	106.18 0.40%	238,900.73 3,600.94	0.26% 14,059.29	A3 / A- NR	2.04 1.96
69371RP59	Paccar Financial Corp Note 3.4% Due 8/9/2023	760,000.00	Various 3.28%	763,588.40 761,807.36	106.18 0.45%	806,932.28 10,192.44	0.87% 45,124.92	A1 / A+ NR	2.11 2.02
06406RAJ6	Bank of NY Mellon Corp Note 3.45% Due 8/11/2023	250,000.00	05/16/2019 2.79%	256,575.00 253,283.24	106.50 0.36%	266,262.00 3,354.17	0.29% 12,978.76	A1 / A AA-	2.12 2.03
02665WCQ2	American Honda Finance Note 3.625% Due 10/10/2023	750,000.00	Various 3.38%	757,259.00 753,791.64	107.11 0.48%	803,344.50 6,117.19	0.86% 49,552.86	A3 / A- NR	2.28 2.19
24422EVN6	John Deere Capital Corp Note 0.45% Due 1/17/2024	640,000.00	03/01/2021 0.47%	639,545.60 639,597.15	99.90 0.49%	639,343.36 936.00	0.68% (253.79)	A2 / A A	2.55 2.53
06051GHF9	Bank of America Corp Callable Note 1X 3/5/2023 3.55% Due 3/5/2024	1,100,000.00	Various 2.74%	1,114,320.00 1,108,755.19	105.06 0.52%	1,155,673.20 12,582.78	1.24% 46,918.01	A2 / A- AA-	2.68 1.63
89114QCB2	Toronto Dominion Bank Note 3.25% Due 3/11/2024	1,100,000.00	Various 2.79%	1,121,362.00 1,112,573.63	107.07 0.60%	1,177,723.80 10,923.61	1.27% 65,150.17	Aa3 / A AA-	2.70 2.58

Holdings Report

As of June 30, 2021

CUSIP	Security Description	Par Value/Units	Purchase Date Book Yield	Cost Value Book Value	Mkt Price Mkt YTM	Market Value Accrued Int.	% of Port. Gain/Loss	Moody/S&P Fitch	Maturity Duration
CORPORATE									
808513BN4	Charles Schwab Corp Callable Note Cont 2/18/2024 0.75% Due 3/18/2024	530,000.00	03/16/2021 0.77%	529,735.00 529,760.39	100.57 0.53%	533,035.31 1,137.29	0.57% 3,274.92	A2 / A A	2.72 2.60
404280BS7	HSBC Holdings PLC Callable Note 1X 5/18/2023 3.95% Due 5/18/2024	1,100,000.00	Various 2.13%	1,156,826.00 1,135,354.53	106.22 0.62%	1,168,385.90 5,189.86	1.25% 33,031.37	A3 / A- A+	2.88 1.82
69371RQ25	Paccar Financial Corp Note 2.15% Due 8/15/2024	195,000.00	08/08/2019 2.20%	194,569.05 194,730.86	104.45 0.71%	203,674.77 1,583.83	0.22% 8,943.91	A1 / A+ NR	3.13 3.01
78015K7C2	Royal Bank of Canada Note 2.25% Due 11/1/2024	1,100,000.00	Various 2.21%	1,102,086.00 1,101,473.47	104.76 0.80%	1,152,382.00 4,125.00	1.23% 50,908.53	A2 / A AA	3.34 3.21
14913Q3B3	Caterpillar Finl Service Note 2.15% Due 11/8/2024	1,100,000.00	01/28/2020 1.91%	1,111,770.00 1,108,274.09	104.89 0.67%	1,153,770.20 3,481.81	1.23% 45,496.11	A2 / A A	3.36 3.24
90331HPL1	US Bank NA Callable Note Cont 12/21/2024 2.05% Due 1/21/2025	955,000.00	01/16/2020 2.10%	952,965.85 953,552.60	104.44 0.75%	997,433.52 8,701.11	1.07% 43,880.92	A1 / AA- AA-	3.56 3.33
46647PCH7	JP Morgan Chase & Co Callable Note Cont 6/1/2024 0.824% Due 6/1/2025	985,000.00	05/24/2021 0.74%	986,279.75 986,253.47	99.82 0.89%	983,187.60 676.37	1.05% (3,065.87)	A2 / A- AA-	3.92 2.88
46647PCK0	JP Morgan Chase & Co Callable Note Cont 6/23/2024 0.969% Due 6/23/2025	470,000.00	Various 0.87%	470,293.55 470,292.14	100.13 0.93%	470,592.20 101.21	0.50% 300.06	A2 / A- AA-	3.98 2.93
46647PBK1	JP Morgan Chase & Co Callable Note Cont 4/22/2025 2.083% Due 4/22/2026	312,000.00	05/20/2021 1.11%	323,646.96 323,337.24	103.44 1.16%	322,735.30 1,245.63	0.35% (601.94)	A2 / A- AA-	4.81 3.65
023135BX3	Amazon.com Inc Callable Note Cont 4/12/2026 1% Due 5/12/2026	1,455,000.00	05/10/2021 1.09%	1,448,714.40 1,448,886.51	100.06 0.99%	1,455,836.63 1,980.42	1.55% 6,950.12	A1 / AA AA-	4.87 4.65
91324PEC2	United Health Group Inc Callable Note Cont 4/15/2026 1.15% Due 5/15/2026	240,000.00	Various 1.08%	240,776.80 240,770.33	100.05 1.14%	240,123.60 322.00	0.26% (646.73)	A3 / A+ A	4.88 4.64
89236TJK2	Toyota Motor Credit Corp Note 1.125% Due 6/18/2026	995,000.00	06/15/2021 1.13%	994,562.20 994,565.32	99.77 1.17%	992,759.26 404.22	1.06% (1,806.06)	A1 / A+ A+	4.97 4.81
06051GJD2	Bank of America Corp Callable Note Cont 6/19/2025 1.319% Due 6/19/2026	475,000.00	06/17/2021 1.23%	476,643.50 476,634.49	100.26 1.25%	476,215.05 208.84	0.51% (419.44)	A2 / A- AA-	4.97 3.85

Holdings Report

As of June 30, 2021

CUSIP	Security Description	Par Value/Units	Purchase Date Book Yield	Cost Value Book Value	Mkt Price Mkt YTM	Market Value Accrued Int.	% of Port. Gain/Loss	Moody/S&P Fitch	Maturity Duration
				20,627,439.71		**21,203,282.30**	**22.71%**	**A1 / A+**	**2.88**
Total Corporate		**20,496,000.00**	**2.08%**	**20,581,534.06**	**0.63%**	**113,248.29**	**621,748.24**	**AA-**	**2.56**
MONEY MARKET FUND									
316175884	Fidelity Institutional Money Market	615,711.15	Various	615,711.15	1.00	615,711.15	0.66%	Aaa / AAA	0.00
	Fund 696		0.01%	615,711.15	0.01%	0.00	0.00	NR	0.00
				615,711.15		**615,711.15**	**0.66%**	**Aaa / AAA**	**0.00**
Total Money Market Fund		**615,711.15**	**0.01%**	**615,711.15**	**0.01%**	**0.00**	**0.00**	**NR**	**0.00**
MUNICIPAL BONDS									
13063DRK6	California State Taxable GO	900,000.00	10/16/2019	920,673.00	105.51	949,554.00	1.02%	Aa2 / AA-	3.26
	2.4% Due 10/1/2024		1.91%	913,613.93	0.69%	5,400.00	35,940.07	AA	3.12
				920,673.00		**949,554.00**	**1.02%**	**Aa2 / AA-**	**3.26**
Total Municipal Bonds		**900,000.00**	**1.91%**	**913,613.93**	**0.69%**	**5,400.00**	**35,940.07**	**AA**	**3.12**
SUPRANATIONAL									
4581X0CW6	Inter-American Dev Bank Note	1,275,000.00	01/10/2017	1,273,431.75	101.06	1,288,560.90	1.39%	Aaa / NR	0.55
	2.125% Due 1/18/2022		2.15%	1,274,827.37	0.19%	12,267.45	13,733.53	AAA	0.54
4581X0CZ9	Inter-American Dev Bank Note	800,000.00	Various	777,732.00	101.88	815,067.20	0.87%	Aaa / AAA	1.21
	1.75% Due 9/14/2022		2.40%	794,128.68	0.19%	4,161.12	20,938.52	AAA	1.19
459058JL8	Intl. Bank Recon & Development Note	945,000.00	Various	943,389.35	98.81	933,749.78	1.00%	Aaa / AAA	4.33
	0.5% Due 10/28/2025		0.54%	943,566.12	0.78%	826.88	(9,816.34)	AAA	4.27
4581X0DV7	Inter-American Dev Bank Note	1,915,000.00	04/13/2021	1,906,229.30	100.04	1,915,691.32	2.04%	Aaa / AAA	4.81
	0.875% Due 4/20/2026		0.97%	1,906,575.13	0.87%	3,304.70	9,116.19	AAA	4.69
				4,900,782.40		**4,953,069.20**	**5.30%**	**Aaa / AAA**	**3.01**
Total Supranational		**4,935,000.00**	**1.42%**	**4,919,097.30**	**0.56%**	**20,560.15**	**33,971.90**	**AAA**	**2.95**
US TREASURY									
912828F96	US Treasury Note	200,000.00	01/27/2017	200,524.11	100.64	201,289.20	0.22%	Aaa / AA+	0.34
	2% Due 10/31/2021		1.94%	200,036.85	0.07%	673.91	1,252.35	AAA	0.33
912828J43	US Treasury Note	1,360,000.00	03/13/2017	1,335,407.68	101.11	1,375,087.84	1.47%	Aaa / AA+	0.67
	1.75% Due 2/28/2022		2.14%	1,356,713.78	0.09%	7,954.89	18,374.06	AAA	0.66

Holdings Report

As of June 30, 2021

CUSIP	Security Description	Par Value/Units	Purchase Date Book Yield	Cost Value Book Value	Mkt Price Mkt YTM	Market Value Accrued Int.	% of Port. Gain/Loss	Moody/S&P Fitch	Maturity Duration
US TREASURY									
912828XG0	US Treasury Note 2.125% Due 6/30/2022	1,100,000.00	08/15/2017 1.82%	1,115,601.34 1,103,193.98	102.02 0.11%	1,122,171.60 63.52	1.20% 18,977.62	Aaa / AA+ AAA	1.00 0.99
912828L24	US Treasury Note 1.875% Due 8/31/2022	1,000,000.00	09/26/2017 1.87%	1,000,433.04 1,000,102.54	102.04 0.13%	1,020,391.00 6,266.98	1.09% 20,288.46	Aaa / AA+ AAA	1.17 1.15
912828L57	US Treasury Note 1.75% Due 9/30/2022	1,240,000.00	10/17/2017 1.99%	1,226,243.75 1,236,530.50	102.01 0.14%	1,264,945.08 5,454.64	1.35% 28,414.58	Aaa / AA+ AAA	1.25 1.24
912828N30	US Treasury Note 2.125% Due 12/31/2022	1,150,000.00	01/25/2018 2.46%	1,132,121.09 1,144,556.87	102.91 0.18%	1,183,512.15 66.41	1.26% 38,955.28	Aaa / AA+ AAA	1.50 1.48
912828T91	US Treasury Note 1.625% Due 10/31/2023	1,500,000.00	05/29/2019 2.05%	1,472,988.28 1,485,749.85	103.04 0.32%	1,545,528.00 4,106.66	1.65% 59,778.15	Aaa / AA+ AAA	2.34 2.29
912828V23	US Treasury Note 2.25% Due 12/31/2023	1,250,000.00	06/21/2019 1.80%	1,274,560.55 1,263,581.94	104.71 0.35%	1,308,935.00 76.43	1.39% 45,353.06	Aaa / AA+ AAA	2.50 2.44
912828B66	US Treasury Note 2.75% Due 2/15/2024	1,500,000.00	04/29/2019 2.31%	1,529,648.44 1,516,228.80	106.20 0.38%	1,592,929.50 15,497.24	1.71% 76,700.70	Aaa / AA+ AAA	2.63 2.53
91282CBR1	US Treasury Note 0.25% Due 3/15/2024	950,000.00	03/30/2021 0.33%	947,699.22 947,895.21	99.60 0.40%	946,215.20 697.01	1.01% (1,680.01)	Aaa / AA+ AAA	2.71 2.69
912828X70	US Treasury Note 2% Due 4/30/2024	1,000,000.00	06/10/2019 1.92%	1,003,515.63 1,002,036.50	104.45 0.42%	1,044,492.00 3,369.57	1.12% 42,455.50	Aaa / AA+ AAA	2.84 2.76
912828XX3	US Treasury Note 2% Due 6/30/2024	1,450,000.00	12/12/2019 1.74%	1,466,595.70 1,460,940.57	104.59 0.46%	1,516,495.55 78.80	1.62% 55,554.98	Aaa / AA+ AAA	3.00 2.92
912828D56	US Treasury Note 2.375% Due 8/15/2024	1,500,000.00	03/05/2020 0.68%	1,611,093.75 1,578,101.03	105.88 0.48%	1,588,242.00 13,383.98	1.71% 10,140.97	Aaa / AA+ AAA	3.13 3.00
9128283D0	US Treasury Note 2.25% Due 10/31/2024	1,500,000.00	11/07/2019 1.77%	1,533,925.78 1,522,716.66	105.68 0.53%	1,585,254.00 5,686.14	1.70% 62,537.34	Aaa / AA+ AAA	3.34 3.21
912828ZC7	US Treasury Note 1.125% Due 2/28/2025	2,000,000.00	03/18/2020 0.81%	2,030,859.38 2,022,849.94	101.85 0.61%	2,037,032.00 7,520.38	2.18% 14,182.06	Aaa / AA+ AAA	3.67 3.58
91282CAM3	US Treasury Note 0.25% Due 9/30/2025	1,900,000.00	02/19/2021 0.51%	1,877,363.28 1,879,100.42	97.93 0.75%	1,860,590.20 1,193.99	1.98% (18,510.22)	Aaa / AA+ AAA	4.25 4.21
91282CAT8	US Treasury Note 0.25% Due 10/31/2025	1,900,000.00	02/11/2021 0.42%	1,885,156.25 1,886,354.44	97.81 0.76%	1,858,363.40 800.27	1.98% (27,991.04)	Aaa / AA+ AAA	4.34 4.29

City of Brea

Account #120

Holdings Report

As of June 30, 2021

CUSIP	Security Description	Par Value/Units	Purchase Date Book Yield	Cost Value Book Value	Mkt Price Mkt YTM	Market Value Accrued Int.	% of Port. Gain/Loss	Moody/S&P Fitch	Maturity Duration
US TREASURY									
91282CAZ4	US Treasury Note 0.375% Due 11/30/2025	1,350,000.00	03/26/2021 0.77%	1,325,794.92 1,327,127.83	98.24 0.78%	1,326,217.05 428.79	1.41% (910.78)	Aaa / AA+ AAA	4.42 4.37
Total US Treasury		**23,850,000.00**	**1.43%**	**23,969,532.19** **23,933,817.71**	**0.43%**	**24,377,690.77** **73,319.61**	**26.05%** **443,873.06**	**Aaa / AA+** **AAA**	**2.76** **2.71**
TOTAL PORTFOLIO		**91,450,838.77**	**1.51%**	**91,896,659.97** **91,741,470.26**	**0.49%**	**93,510,693.31** **335,812.39**	**100.00%** **1,769,223.05**	**Aa1 / AA** **AAA**	**2.88** **2.60**
TOTAL MARKET VALUE PLUS ACCRUED						**93,846,505.70**			

Transaction Ledger

As of June 30, 2021

Transaction Type	Settlement Date	CUSIP	Quantity	Security Description	Price	Acq/Disp Yield	Amount	Interest Pur/Sold	Total Amount	Gain/Loss
ACQUISITIONS										
Purchase	06/01/2021	46647PCH7	195,000.00	JP Morgan Chase & Co Callable Note Cont 6/1/2024 0.824% Due 6/1/2025	100.000	0.77%	195,000.00	0.00	195,000.00	0.00
Purchase	06/01/2021	46647PCH7	525,000.00	JP Morgan Chase & Co Callable Note Cont 6/1/2024 0.824% Due 6/1/2025	100.163	0.73%	525,855.75	0.00	525,855.75	0.00
Purchase	06/01/2021	46647PCH7	265,000.00	JP Morgan Chase & Co Callable Note Cont 6/1/2024 0.824% Due 6/1/2025	100.160	0.73%	265,424.00	0.00	265,424.00	0.00
Purchase	06/02/2021	316175884	5.08	Fidelity Institutional Money Market Fund 696	1.000	0.01%	5.08	0.00	5.08	0.00
Purchase	06/08/2021	316175884	18,140.63	Fidelity Institutional Money Market Fund 696	1.000	0.01%	18,140.63	0.00	18,140.63	0.00
Purchase	06/09/2021	316175884	9,687.50	Fidelity Institutional Money Market Fund 696	1.000	0.01%	9,687.50	0.00	9,687.50	0.00
Purchase	06/14/2021	316175884	21,562.50	Fidelity Institutional Money Market Fund 696	1.000	0.01%	21,562.50	0.00	21,562.50	0.00
Purchase	06/15/2021	316175884	93.33	Fidelity Institutional Money Market Fund 696	1.000	0.01%	93.33	0.00	93.33	0.00
Purchase	06/15/2021	316175884	421.67	Fidelity Institutional Money Market Fund 696	1.000	0.01%	421.67	0.00	421.67	0.00
Purchase	06/15/2021	316175884	91.38	Fidelity Institutional Money Market Fund 696	1.000	0.01%	91.38	0.00	91.38	0.00
Purchase	06/15/2021	316175884	191.33	Fidelity Institutional Money Market Fund 696	1.000	0.01%	191.33	0.00	191.33	0.00
Purchase	06/15/2021	316175884	148.83	Fidelity Institutional Money Market Fund 696	1.000	0.01%	148.83	0.00	148.83	0.00
Purchase	06/15/2021	316175884	126.67	Fidelity Institutional Money Market Fund 696	1.000	0.01%	126.67	0.00	126.67	0.00
Purchase	06/15/2021	316175884	1,576.17	Fidelity Institutional Money Market Fund 696	1.000	0.01%	1,576.17	0.00	1,576.17	0.00
Purchase	06/15/2021	316175884	175.50	Fidelity Institutional Money Market Fund 696	1.000	0.01%	175.50	0.00	175.50	0.00

Transaction Ledger

As of June 30, 2021

Transaction Type	Settlement Date	CUSIP	Quantity	Security Description	Price	Acq/Disp Yield	Amount	Interest Pur/Sold	Total Amount	Gain/Loss
ACQUISITIONS										
Purchase	06/15/2021	316175884	107.92	Fidelity Institutional Money Market Fund 696	1.000	0.01%	107.92	0.00	107.92	0.00
Purchase	06/15/2021	316175884	36,103.96	Fidelity Institutional Money Market Fund 696	1.000	0.01%	36,103.96	0.00	36,103.96	0.00
Purchase	06/15/2021	316175884	13,226.96	Fidelity Institutional Money Market Fund 696	1.000	0.01%	13,226.96	0.00	13,226.96	0.00
Purchase	06/15/2021	316175884	17,491.71	Fidelity Institutional Money Market Fund 696	1.000	0.01%	17,491.71	0.00	17,491.71	0.00
Purchase	06/15/2021	316175884	32,668.84	Fidelity Institutional Money Market Fund 696	1.000	0.01%	32,668.84	0.00	32,668.84	0.00
Purchase	06/15/2021	316175884	31,413.61	Fidelity Institutional Money Market Fund 696	1.000	0.01%	31,413.61	0.00	31,413.61	0.00
Purchase	06/16/2021	316175884	429,223.30	Fidelity Institutional Money Market Fund 696	1.000	0.01%	429,223.30	0.00	429,223.30	0.00
Purchase	06/16/2021	91324PEC2	160,000.00	United Health Group Inc Callable Note Cont 4/15/2026 1.15% Due 5/15/2026	100.333	1.08%	160,532.80	138.00	160,670.80	0.00
Purchase	06/17/2021	316175884	4,500.00	Fidelity Institutional Money Market Fund 696	1.000	0.01%	4,500.00	0.00	4,500.00	0.00
Purchase	06/17/2021	91324PEC2	80,000.00	United Health Group Inc Callable Note Cont 4/15/2026 1.15% Due 5/15/2026	100.305	1.08%	80,244.00	71.56	80,315.56	0.00
Purchase	06/18/2021	316175884	768,644.17	Fidelity Institutional Money Market Fund 696	1.000	0.01%	768,644.17	0.00	768,644.17	0.00
Purchase	06/18/2021	316175884	80,794.29	Fidelity Institutional Money Market Fund 696	1.000	0.01%	80,794.29	0.00	80,794.29	0.00
Purchase	06/18/2021	316175884	143.37	Fidelity Institutional Money Market Fund 696	1.000	0.01%	143.37	0.00	143.37	0.00
Purchase	06/18/2021	89236TJK2	995,000.00	Toyota Motor Credit Corp Note 1.125% Due 6/18/2026	99.956	1.13%	994,562.20	0.00	994,562.20	0.00
Purchase	06/19/2021	316175884	16,500.00	Fidelity Institutional Money Market Fund 696	1.000	0.01%	16,500.00	0.00	16,500.00	0.00

City of Brea

Account #120

Transaction Ledger

As of June 30, 2021

Transaction Type	Settlement Date	CUSIP	Quantity	Security Description	Price	Acq/Disp Yield	Amount	Interest Pur/Sold	Total Amount	Gain/Loss
ACQUISITIONS										
Purchase	06/21/2021	06051GJD2	475,000.00	Bank of America Corp Callable Note Cont 6/19/2025 1.319% Due 6/19/2026	100.346	1.23%	476,643.50	34.81	476,678.31	0.00
Purchase	06/21/2021	316175884	323,166.85	Fidelity Institutional Money Market Fund 696	1.000	0.01%	323,166.85	0.00	323,166.85	0.00
Purchase	06/21/2021	316175884	254.58	Fidelity Institutional Money Market Fund 696	1.000	0.01%	254.58	0.00	254.58	0.00
Purchase	06/21/2021	316175884	51.75	Fidelity Institutional Money Market Fund 696	1.000	0.01%	51.75	0.00	51.75	0.00
Purchase	06/21/2021	316175884	598.17	Fidelity Institutional Money Market Fund 696	1.000	0.01%	598.17	0.00	598.17	0.00
Purchase	06/21/2021	316175884	20,737.76	Fidelity Institutional Money Market Fund 696	1.000	0.01%	20,737.76	0.00	20,737.76	0.00
Purchase	06/23/2021	316175884	688,446.21	Fidelity Institutional Money Market Fund 696	1.000	0.01%	688,446.21	0.00	688,446.21	0.00
Purchase	06/23/2021	46647PCK0	185,000.00	JP Morgan Chase & Co Callable Note Cont 6/23/2024 0.969% Due 6/23/2025	100.000	0.89%	185,000.00	0.00	185,000.00	0.00
Purchase	06/24/2021	46647PCK0	285,000.00	JP Morgan Chase & Co Callable Note Cont 6/23/2024 0.969% Due 6/23/2025	100.103	0.86%	285,293.55	7.67	285,301.22	0.00
Purchase	06/26/2021	316175884	15,368.00	Fidelity Institutional Money Market Fund 696	1.000	0.01%	15,368.00	0.00	15,368.00	0.00
Purchase	06/30/2021	316175884	52,468.75	Fidelity Institutional Money Market Fund 696	1.000	0.01%	52,468.75	0.00	52,468.75	0.00
Subtotal			**5,749,130.79**				**5,752,686.59**	**252.04**	**5,752,938.63**	**0.00**
Security Contribution	06/01/2021	316175884	120,911.72	Fidelity Institutional Money Market Fund 696	1.000		120,911.72	0.00	120,911.72	0.00
Security Contribution	06/21/2021	316175884	17,656.90	Fidelity Institutional Money Market Fund 696	1.000		17,656.90	0.00	17,656.90	0.00
Subtotal			**138,568.62**				**138,568.62**	**0.00**	**138,568.62**	**0.00**

City of Brea

Account #120

Transaction Ledger

As of June 30, 2021

Transaction Type	Settlement Date	CUSIP	Quantity	Security Description	Price	Acq/Disp Yield	Amount	Interest Pur/Sold	Total Amount	Gain/Loss
ACQUISITIONS										
Short Sale	06/01/2021	316175884	-986,279.75	Fidelity Institutional Money Market Fund 696	1.000		-986,279.75	0.00	-986,279.75	0.00
Short Sale	06/16/2021	316175884	-160,670.80	Fidelity Institutional Money Market Fund 696	1.000		-160,670.80	0.00	-160,670.80	0.00
Short Sale	06/18/2021	316175884	-994,562.20	Fidelity Institutional Money Market Fund 696	1.000		-994,562.20	0.00	-994,562.20	0.00
Short Sale	06/21/2021	316175884	-476,678.31	Fidelity Institutional Money Market Fund 696	1.000		-476,678.31	0.00	-476,678.31	0.00
Subtotal			**-2,618,191.06**				**-2,618,191.06**	**0.00**	**-2,618,191.06**	**0.00**
TOTAL ACQUISITIONS			**3,269,508.35**				**3,273,064.15**	**252.04**	**3,273,316.19**	**0.00**
DISPOSITIONS										
Closing Purchase	06/01/2021	316175884	-986,279.75	Fidelity Institutional Money Market Fund 696	1.000		-986,279.75	0.00	-986,279.75	0.00
Closing Purchase	06/16/2021	316175884	-160,670.80	Fidelity Institutional Money Market Fund 696	1.000		-160,670.80	0.00	-160,670.80	0.00
Closing Purchase	06/18/2021	316175884	-994,562.20	Fidelity Institutional Money Market Fund 696	1.000		-994,562.20	0.00	-994,562.20	0.00
Closing Purchase	06/21/2021	316175884	-476,678.31	Fidelity Institutional Money Market Fund 696	1.000		-476,678.31	0.00	-476,678.31	0.00
Subtotal			**-2,618,191.06**				**-2,618,191.06**	**0.00**	**-2,618,191.06**	**0.00**
Sale	06/01/2021	316175884	986,279.75	Fidelity Institutional Money Market Fund 696	1.000	0.01%	986,279.75	0.00	986,279.75	0.00
Sale	06/16/2021	316175884	160,670.80	Fidelity Institutional Money Market Fund 696	1.000	0.01%	160,670.80	0.00	160,670.80	0.00
Sale	06/16/2021	912828F96	425,000.00	US Treasury Note 2% Due 10/31/2021	100.738	1.94%	428,137.70	1,085.60	429,223.30	3,049.76
Sale	06/17/2021	316175884	80,315.56	Fidelity Institutional Money Market Fund 696	1.000	0.01%	80,315.56	0.00	80,315.56	0.00
Sale	06/18/2021	316175884	994,562.20	Fidelity Institutional Money Market Fund 696	1.000	0.01%	994,562.20	0.00	994,562.20	0.00

Transaction Ledger

As of June 30, 2021

Transaction Type	Settlement Date	CUSIP	Quantity	Security Description	Price	Acq/Disp Yield	Amount	Interest Pur/Sold	Total Amount	Gain/Loss
DISPOSITIONS										
Sale	06/18/2021	89236TDP7	750,000.00	Toyota Motor Credit Corp Note 2.6% Due 1/11/2022	101.352	3.11%	760,140.00	8,504.17	768,644.17	12,372.29
Sale	06/18/2021	912828F96	80,000.00	US Treasury Note 2% Due 10/31/2021	100.727	1.94%	80,581.25	213.04	80,794.29	564.94
Sale	06/21/2021	316175884	476,678.31	Fidelity Institutional Money Market Fund 696	1.000	0.01%	476,678.31	0.00	476,678.31	0.00
Sale	06/21/2021	912828F96	320,000.00	US Treasury Note 2% Due 10/31/2021	100.707	1.94%	322,262.50	904.35	323,166.85	2,198.70
Sale	06/23/2021	48128BAB7	850,000.00	JP Morgan Chase & Co Callable Note 1X 1/15/2022 2.972% Due 1/15/2023	101.454	3.06%	862,359.00	11,087.21	873,446.21	14,075.40
Sale	06/24/2021	316175884	285,301.22	Fidelity Institutional Money Market Fund 696	1.000	0.01%	285,301.22	0.00	285,301.22	0.00
Subtotal			**5,408,807.84**				**5,437,288.29**	**21,794.37**	**5,459,082.66**	**32,261.09**
Paydown	06/15/2021	43813DAC2	0.00	Honda Auto Receivables 2020-2 A3 0.82% Due 7/15/2024	100.000		0.00	191.33	191.33	0.00
Paydown	06/15/2021	43815NAC8	35,295.54	Honda Auto Receivables Trust 2019-3 A3 1.78% Due 8/15/2023	100.000		35,295.54	808.42	36,103.96	0.00
Paydown	06/15/2021	44891RAC4	0.00	Hyundai Auto Receivables Trust 2020-C A3 0.38% Due 5/15/2025	100.000		0.00	148.83	148.83	0.00
Paydown	06/15/2021	44933LAC7	0.00	Hyundai Auto Receivables Trust 2021-A A3 0.38% Due 9/15/2025	100.000		0.00	126.67	126.67	0.00
Paydown	06/15/2021	477870AC3	12,841.10	John Deere Owner Trust 2019-B A3 2.21% Due 12/15/2023	100.000		12,841.10	385.86	13,226.96	0.00
Paydown	06/15/2021	47787NAC3	0.00	John Deere Owner Trust 2020-B A3 0.51% Due 11/15/2024	100.000		0.00	91.38	91.38	0.00
Paydown	06/15/2021	47788EAC2	17,276.34	John Deere Owner Trust 2018-B A3 3.08% Due 11/15/2022	100.000		17,276.34	215.37	17,491.71	0.00
Paydown	06/15/2021	47789JAD8	31,828.90	John Deere Owner Trust 2019-A A3 2.91% Due 7/17/2023	100.000		31,828.90	839.94	32,668.84	0.00

Transaction Ledger

As of June 30, 2021

Transaction Type	Settlement Date	CUSIP	Quantity	Security Description	Price	Acq/Disp Yield	Amount	Interest Pur/Sold	Total Amount	Gain/Loss
DISPOSITIONS										
Paydown	06/15/2021	47789KAC7	0.00	John Deere Owner Trust 2020-A A3 1.1% Due 8/15/2024	100.000		0.00	421.67	421.67	0.00
Paydown	06/15/2021	58769EAC2	0.00	Mercedes-Benz Auto Lease Trust 2020-B A3 0.4% Due 11/15/2023	100.000		0.00	93.33	93.33	0.00
Paydown	06/15/2021	65479JAD5	0.00	Nissan Auto Receivables Owner 2019-C A3 1.93% Due 7/15/2024	100.000		0.00	1,576.17	1,576.17	0.00
Paydown	06/15/2021	89236XAC0	0.00	Toyota Auto Receivables 2020-D A3 0.35% Due 1/15/2025	100.000		0.00	107.92	107.92	0.00
Paydown	06/15/2021	89238TAD5	31,067.16	Toyota Auto Receivables Trust 2018-B A3 2.96% Due 9/15/2022	100.000		31,067.16	346.45	31,413.61	0.00
Paydown	06/15/2021	89240BAC2	0.00	Toyota Auto Receivables Owners 2021-A A3 0.26% Due 5/15/2025	100.000		0.00	175.50	175.50	0.00
Paydown	06/18/2021	43813KAC6	0.00	Honda Auto Receivables Trust 2020-3 A3 0.37% Due 10/18/2024	100.000		0.00	143.37	143.37	0.00
Paydown	06/21/2021	43813GAC5	0.00	Honda Auto Receivables Trust 2021-1 A3 0.27% Due 4/21/2025	100.000		0.00	51.75	51.75	0.00
Paydown	06/21/2021	43815HAC1	20,485.36	Honda Auto Receivables Trust 2018-3 A3 2.95% Due 8/22/2022	100.000		20,485.36	252.40	20,737.76	0.00
Paydown	06/21/2021	92290BAA9	0.00	Verizon Owner Trust 2020-B A 0.47% Due 2/20/2025	100.000		0.00	254.58	254.58	0.00
Paydown	06/21/2021	92348AAA3	0.00	Verizon Owner Trust 2019-C A1A 1.94% Due 4/22/2024	100.000		0.00	598.17	598.17	0.00
Subtotal			**148,794.40**				**148,794.40**	**6,829.11**	**155,623.51**	**0.00**
Security Withdrawal	06/01/2021	316175884	120,911.72	Fidelity Institutional Money Market Fund 696	1.000		120,911.72	0.00	120,911.72	0.00

City of Brea

Account #120

Transaction Ledger

As of June 30, 2021

Transaction Type	Settlement Date	CUSIP	Quantity	Security Description	Price	Acq/Disp Yield	Amount	Interest Pur/Sold	Total Amount	Gain/Loss
DISPOSITIONS										
Security Withdrawal	06/21/2021	316175884	17,656.90	Fidelity Institutional Money Market Fund 696	1.000		17,656.90	0.00	17,656.90	0.00
Subtotal			**138,568.62**				**138,568.62**	**0.00**	**138,568.62**	**0.00**
TOTAL DISPOSITIONS			**3,077,979.80**				**3,106,460.25**	**28,623.48**	**3,135,083.73**	**32,261.09**
OTHER TRANSACTIONS										
Interest	06/08/2021	3130A0F70	1,075,000.00	FHLB Note 3.375% Due 12/8/2023	0.000		18,140.63	0.00	18,140.63	0.00
Interest	06/09/2021	3130A3KM5	775,000.00	FHLB Note 2.5% Due 12/9/2022	0.000		9,687.50	0.00	9,687.50	0.00
Interest	06/14/2021	3130A1XJ2	1,500,000.00	FHLB Note 2.875% Due 6/14/2024	0.000		21,562.50	0.00	21,562.50	0.00
Interest	06/17/2021	3135G04Z3	1,800,000.00	FNMA Note 0.5% Due 6/17/2025	0.000		4,500.00	0.00	4,500.00	0.00
Interest	06/19/2021	3137EAEN5	1,200,000.00	FHLMC Note 2.75% Due 6/19/2023	0.000		16,500.00	0.00	16,500.00	0.00
Interest	06/26/2021	931142EK5	904,000.00	Wal-Mart Stores Callable Note Cont 5/26/2023 3.4% Due 6/26/2023	0.000		15,368.00	0.00	15,368.00	0.00
Interest	06/30/2021	912828N30	1,150,000.00	US Treasury Note 2.125% Due 12/31/2022	0.000		12,218.75	0.00	12,218.75	0.00
Interest	06/30/2021	912828V23	1,250,000.00	US Treasury Note 2.25% Due 12/31/2023	0.000		14,062.50	0.00	14,062.50	0.00
Interest	06/30/2021	912828XG0	1,100,000.00	US Treasury Note 2.125% Due 6/30/2022	0.000		11,687.50	0.00	11,687.50	0.00

City of Brea

Account #120

Transaction Ledger

As of June 30, 2021

Transaction Type	Settlement Date	CUSIP	Quantity	Security Description	Price	Acq/Disp Yield	Amount	Interest Pur/Sold	Total Amount	Gain/Loss
OTHER TRANSACTIONS										
Interest	06/30/2021	912828XX3	1,450,000.00	US Treasury Note 2% Due 6/30/2024	0.000		14,500.00	0.00	14,500.00	0.00
Subtotal			**12,204,000.00**				**138,227.38**	**0.00**	**138,227.38**	**0.00**
Dividend	06/02/2021	316175884	29,108.45	Fidelity Institutional Money Market Fund 696	0.000		5.08	0.00	5.08	0.00
Subtotal			**29,108.45**				**5.08**	**0.00**	**5.08**	**0.00**
TOTAL OTHER TRANSACTIONS			**12,233,108.45**				**138,232.46**	**0.00**	**138,232.46**	**0.00**

Income Earned

As of June 30, 2021

CUSIP	Security Description	Trade Date Settle Date Units	Book Value: Begin Book Value: Acq Book Value: Disp Book Value: End	Prior Accrued Inc. Received Ending Accrued Total Interest	Accr. Of Discount Amort. Of Premium Net Accret/Amort Income Earned	Total Income
FIXED INCOME						
023135BX3	Amazon.com Inc Callable Note Cont 4/12/2026 1% Due 05/12/2026	05/10/2021 05/12/2021 1,455,000.00	1,448,783.25 0.00 0.00 1,448,886.51	767.92 0.00 1,980.42 1,212.50	103.26 0.00 103.26 1,315.76	1,315.76
02665WCJ8	American Honda Finance Note 3.45% Due 07/14/2023	07/11/2018 07/16/2018 225,000.00	224,835.04 0.00 0.00 224,841.44	2,954.06 0.00 3,600.94 646.88	6.40 0.00 6.40 653.28	653.28
02665WCQ2	American Honda Finance Note 3.625% Due 10/10/2023	Various Various 750,000.00	753,928.52 0.00 0.00 753,791.64	3,851.56 0.00 6,117.19 2,265.63	7.41 144.29 (136.88) 2,128.75	2,128.75
037833AK6	Apple Inc Note 2.4% Due 05/03/2023	Various Various 900,000.00	887,493.44 0.00 0.00 888,028.68	1,680.00 0.00 3,480.00 1,800.00	535.24 0.00 535.24 2,335.24	2,335.24
06051GHF9	Bank of America Corp Callable Note 1X 3/5/2023 3.55% Due 03/05/2024	Various Various 1,100,000.00	1,109,023.75 0.00 0.00 1,108,755.19	9,328.61 0.00 12,582.78 3,254.17	0.00 268.56 (268.56) 2,985.61	2,985.61
06051GJD2	Bank of America Corp Callable Note Cont 6/19/2025 1.319% Due 06/19/2026	06/17/2021 06/21/2021 475,000.00	0.00 476,643.50 0.00 476,634.49	0.00 (34.81) 208.84 174.03	0.00 9.01 (9.01) 165.02	165.02
06406RAG2	Bank of NY Mellon Corp Note 3.5% Due 04/28/2023	05/16/2019 05/20/2019 800,000.00	810,277.00 0.00 0.00 809,834.03	2,566.67 0.00 4,900.00 2,333.33	0.00 442.97 (442.97) 1,890.36	1,890.36
06406RAJ6	Bank of NY Mellon Corp Note 3.45% Due 08/11/2023	05/16/2019 05/20/2019 250,000.00	253,410.99 0.00 0.00 253,283.24	2,635.42 0.00 3,354.17 718.75	0.00 127.75 (127.75) 591.00	591.00
13063DRK6	California State Taxable GO 2.4% Due 10/01/2024	10/16/2019 10/24/2019 900,000.00	913,957.71 0.00 0.00 913,613.93	3,600.00 0.00 5,400.00 1,800.00	0.00 343.78 (343.78) 1,456.22	1,456.22

Income Earned

As of June 30, 2021

CUSIP	Security Description	Trade Date Settle Date Units	Book Value: Begin Book Value: Acq Book Value: Disp Book Value: End	Prior Accrued Inc. Received Ending Accrued Total Interest	Accr. Of Discount Amort. Of Premium Net Accret/Amort Income Earned	Total Income
14913Q3B3	Caterpillar Finl Service Note 2.15% Due 11/08/2024	01/28/2020 01/30/2020 1,100,000.00	1,108,476.56 0.00 0.00 1,108,274.09	1,510.97 0.00 3,481.81 1,970.84	0.00 202.47 (202.47) 1,768.37	1,768.37
24422ETG4	John Deere Capital Corp Note 2.8% Due 03/06/2023	Various Various 650,000.00	645,432.97 0.00 0.00 645,646.06	4,297.22 0.00 5,813.89 1,516.67	217.65 4.56 213.09 1,729.76	1,729.76
24422EVN6	John Deere Capital Corp Note 0.45% Due 01/17/2024	03/01/2021 03/04/2021 640,000.00	639,584.15 0.00 0.00 639,597.15	696.00 0.00 936.00 240.00	13.00 0.00 13.00 253.00	253.00
3130A0F70	FHLB Note 3.375% Due 12/08/2023	Various Various 1,075,000.00	1,090,967.93 0.00 0.00 1,090,447.23	17,435.16 18,140.63 2,317.97 3,023.44	0.00 520.70 (520.70) 2,502.74	2,502.74
3130A1XJ2	FHLB Note 2.875% Due 06/14/2024	06/18/2019 06/19/2019 1,500,000.00	1,539,496.83 0.00 0.00 1,538,428.39	20,005.21 21,562.50 2,036.46 3,593.75	0.00 1,068.44 (1,068.44) 2,525.31	2,525.31
3130A2UW4	FHLB Note 2.875% Due 09/13/2024	09/13/2019 09/16/2019 1,200,000.00	1,240,807.89 0.00 0.00 1,239,787.70	7,475.00 0.00 10,350.00 2,875.00	0.00 1,020.19 (1,020.19) 1,854.81	1,854.81
3130A3KM5	FHLB Note 2.5% Due 12/09/2022	08/28/2018 08/29/2018 775,000.00	771,374.71 0.00 0.00 771,570.32	9,256.94 9,687.50 1,184.03 1,614.59	195.61 0.00 195.61 1,810.20	1,810.20
3130A8QS5	FHLB Note 1.125% Due 07/14/2021	10/04/2016 10/06/2016 1,085,000.00	1,084,752.53 0.00 0.00 1,084,925.18	4,645.16 0.00 5,662.34 1,017.18	172.65 0.00 172.65 1,189.83	1,189.83
3130AB3H7	FHLB Note 2.375% Due 03/08/2024	04/29/2019 04/30/2019 1,500,000.00	1,500,059.84 0.00 0.00 1,500,058.06	8,213.54 0.00 11,182.29 2,968.75	0.00 1.78 (1.78) 2,966.97	2,966.97

Income Earned

As of June 30, 2021

CUSIP	Security Description	Trade Date Settle Date Units	Book Value: Begin Book Value: Acq Book Value: Disp Book Value: End	Prior Accrued Inc. Received Ending Accrued Total Interest	Accr. Of Discount Amort. Of Premium Net Accret/Amort Income Earned	Total Income
3130AF5B9	FHLB Note 3% Due 10/12/2021	11/29/2018 11/30/2018 1,350,000.00	1,350,432.15 0.00 0.00 1,350,334.68	5,512.50 0.00 8,887.50 3,375.00	0.00 97.47 (97.47) 3,277.53	3,277.53
313383YJ4	FHLB Note 3.375% Due 09/08/2023	10/29/2018 10/31/2018 1,200,000.00	1,207,367.02 0.00 0.00 1,207,100.42	9,337.50 0.00 12,712.50 3,375.00	0.00 266.60 (266.60) 3,108.40	3,108.40
3135G03U5	FNMA Note 0.625% Due 04/22/2025	04/22/2020 04/24/2020 1,510,000.00	1,507,576.67 0.00 0.00 1,507,627.83	1,022.40 0.00 1,808.85 786.45	51.16 0.00 51.16 837.61	837.61
3135G04Z3	FNMA Note 0.5% Due 06/17/2025	Various Various 1,800,000.00	1,802,535.01 0.00 0.00 1,802,483.52	4,100.00 4,500.00 350.00 750.00	32.34 83.83 (51.49) 698.51	698.51
3135G05X7	FNMA Note 0.375% Due 08/25/2025	Various Various 1,800,000.00	1,794,047.79 0.00 0.00 1,794,163.30	1,800.00 0.00 2,362.51 562.51	115.51 0.00 115.51 678.02	678.02
3135G06G3	FNMA Note 0.5% Due 11/07/2025	Various Various 1,825,000.00	1,819,747.31 0.00 0.00 1,819,844.58	608.34 0.00 1,368.75 760.41	97.27 0.00 97.27 857.68	857.68
3135G06H1	FNMA Note 0.25% Due 11/27/2023	11/23/2020 11/25/2020 1,610,000.00	1,608,479.14 0.00 0.00 1,608,529.34	44.72 0.00 380.14 335.42	50.20 0.00 50.20 385.62	385.62
3135G0T94	FNMA Note 2.375% Due 01/19/2023	03/14/2018 03/16/2018 625,000.00	621,656.63 0.00 0.00 621,824.64	5,442.71 0.00 6,679.69 1,236.98	168.01 0.00 168.01 1,404.99	1,404.99
3135G0U43	FNMA Note 2.875% Due 09/12/2023	06/21/2019 06/24/2019 1,500,000.00	1,532,328.08 0.00 0.00 1,531,163.80	9,463.54 0.00 13,057.29 3,593.75	0.00 1,164.28 (1,164.28) 2,429.47	2,429.47

Income Earned

As of June 30, 2021

CUSIP	Security Description	Trade Date Settle Date Units	Book Value: Begin Book Value: Acq Book Value: Disp Book Value: End	Prior Accrued Inc. Received Ending Accrued Total Interest	Accr. Of Discount Amort. Of Premium Net Accret/Amort Income Earned	Total Income
3135G0W66	FNMA Note 1.625% Due 10/15/2024	Various Various 1,755,000.00	1,762,629.21 0.00 0.00 1,762,443.42	3,644.07 0.00 6,020.63 2,376.56	15.60 201.39 (185.79) 2,190.77	2,190.77
3135G0X24	FNMA Note 1.625% Due 01/07/2025	Various Various 1,875,000.00	1,884,922.38 0.00 0.00 1,884,696.19	12,187.50 0.00 14,726.57 2,539.07	30.17 256.36 (226.19) 2,312.88	2,312.88
3137EAEN5	FHLMC Note 2.75% Due 06/19/2023	07/20/2018 07/23/2018 1,200,000.00	1,197,485.52 0.00 0.00 1,197,586.37	14,850.00 16,500.00 1,100.00 2,750.00	100.85 0.00 100.85 2,850.85	2,850.85
3137EAEP0	FHLMC Note 1.5% Due 02/12/2025	02/13/2020 02/14/2020 1,920,000.00	1,918,904.77 0.00 0.00 1,918,929.07	8,720.00 0.00 11,120.00 2,400.00	24.30 0.00 24.30 2,424.30	2,424.30
3137EAER6	FHLMC Note 0.375% Due 05/05/2023	05/05/2020 05/07/2020 1,660,000.00	1,659,551.57 0.00 0.00 1,659,570.71	449.58 0.00 968.33 518.75	19.14 0.00 19.14 537.89	537.89
3137EAEU9	FHLMC Note 0.375% Due 07/21/2025	Various Various 1,800,000.00	1,794,638.87 0.00 0.00 1,794,745.32	2,437.50 0.00 3,000.00 562.50	106.45 0.00 106.45 668.95	668.95
3137EAEV7	FHLMC Note 0.25% Due 08/24/2023	08/19/2020 08/21/2020 1,025,000.00	1,024,224.92 0.00 0.00 1,024,253.49	690.45 0.00 903.99 213.54	28.57 0.00 28.57 242.11	242.11
3137EAEX3	FHLMC Note 0.375% Due 09/23/2025	Various Various 1,805,000.00	1,800,297.82 0.00 0.00 1,800,387.37	1,278.55 0.00 1,842.61 564.06	89.55 0.00 89.55 653.61	653.61
404280BS7	HSBC Holdings PLC Callable Note 1X 5/18/2023 3.95% Due 05/18/2024	Various Various 1,100,000.00	1,136,362.73 0.00 0.00 1,135,354.53	1,569.03 0.00 5,189.86 3,620.83	0.00 1,008.20 (1,008.20) 2,612.63	2,612.63

Income Earned

As of June 30, 2021

CUSIP	Security Description	Trade Date Settle Date Units	Book Value: Begin Book Value: Acq Book Value: Disp Book Value: End	Prior Accrued Inc. Received Ending Accrued Total Interest	Accr. Of Discount Amort. Of Premium Net Accret/Amort Income Earned	Total Income
43813DAC2	Honda Auto Receivables 2020-2 A3 0.82% Due 07/15/2024	05/18/2020 05/27/2020 280,000.00	279,983.36 0.00 0.00 279,983.80	102.04 191.33 102.04 191.33	0.44 0.00 0.44 191.77	191.77
43813GAC5	Honda Auto Receivables Trust 2021-1 A3 0.27% Due 04/21/2025	02/17/2021 02/24/2021 230,000.00	229,996.15 0.00 0.00 229,996.27	17.25 51.75 17.25 51.75	0.12 0.00 0.12 51.87	51.87
43813KAC6	Honda Auto Receivables Trust 2020-3 A3 0.37% Due 10/18/2024	09/22/2020 09/29/2020 465,000.00	464,946.31 0.00 0.00 464,948.10	62.13 143.37 62.13 143.37	1.79 0.00 1.79 145.16	145.16
43815HAC1	Honda Auto Receivables Trust 2018-3 A3 2.95% Due 08/22/2022	08/21/2018 08/28/2018 82,187.16	102,668.19 0.00 20,485.36 82,183.93	84.13 252.40 67.35 235.62	1.10 0.00 1.10 236.72	236.72
43815NAC8	Honda Auto Receivables Trust 2019-3 A3 1.78% Due 08/15/2023	08/20/2019 08/27/2019 509,704.46	544,998.09 0.00 35,295.54 509,702.79	431.16 808.42 403.23 780.49	0.24 0.00 0.24 780.73	780.73
44891RAC4	Hyundai Auto Receivables Trust 2020-C A3 0.38% Due 05/15/2025	10/20/2020 10/28/2020 470,000.00	469,911.16 0.00 0.00 469,913.86	79.38 148.83 79.38 148.83	2.70 0.00 2.70 151.53	151.53
44933LAC7	Hyundai Auto Receivables Trust 2021-A A3 0.38% Due 09/15/2025	04/20/2021 04/28/2021 400,000.00	399,959.21 0.00 0.00 399,960.34	67.56 126.67 67.56 126.67	1.13 0.00 1.13 127.80	127.80
4581X0CW6	Inter-American Dev Bank Note 2.125% Due 01/18/2022	01/10/2017 01/18/2017 1,275,000.00	1,274,801.61 0.00 0.00 1,274,827.37	10,009.64 0.00 12,267.45 2,257.81	25.76 0.00 25.76 2,283.57	2,283.57
4581X0CZ9	Inter-American Dev Bank Note 1.75% Due 09/14/2022	Various Various 800,000.00	793,728.36 0.00 0.00 794,128.68	2,994.44 0.00 4,161.12 1,166.68	400.32 0.00 400.32 1,567.00	1,567.00

Income Earned

As of June 30, 2021

CUSIP	Security Description	Trade Date Settle Date Units	Book Value: Begin Book Value: Acq Book Value: Disp Book Value: End	Prior Accrued Inc. Received Ending Accrued Total Interest	Accr. Of Discount Amort. Of Premium Net Accret/Amort Income Earned	Total Income
4581X0DV7	Inter-American Dev Bank Note 0.875% Due 04/20/2026	04/13/2021 04/20/2021 1,915,000.00	1,906,431.04 0.00 0.00 1,906,575.13	1,908.35 0.00 3,304.70 1,396.35	144.09 0.00 144.09 1,540.44	1,540.44
459058JL8	Intl. Bank Recon & Development Note 0.5% Due 10/28/2025	Various Various 945,000.00	943,538.90 0.00 0.00 943,566.12	433.13 0.00 826.88 393.75	27.22 0.00 27.22 420.97	420.97
46647PBK1	JP Morgan Chase & Co Callable Note Cont 4/22/2025 2.083% Due 04/22/2026	05/20/2021 05/24/2021 312,000.00	323,581.76 0.00 0.00 323,337.24	704.05 0.00 1,245.63 541.58	0.00 244.52 (244.52) 297.06	297.06
46647PCH7	JP Morgan Chase & Co Callable Note Cont 6/1/2024 0.824% Due 06/01/2025	05/24/2021 06/01/2021 985,000.00	0.00 986,279.75 0.00 986,253.47	0.00 0.00 676.37 676.37	0.00 26.28 (26.28) 650.09	650.09
46647PCK0	JP Morgan Chase & Co Callable Note Cont 6/23/2024 0.969% Due 06/23/2025	Various Various 470,000.00	0.00 470,293.55 0.00 470,292.14	0.00 (7.67) 101.21 93.54	0.00 1.41 (1.41) 92.13	92.13
477870AC3	John Deere Owner Trust 2019-B A3 2.21% Due 12/15/2023	07/16/2019 07/24/2019 196,677.83	209,493.24 0.00 12,841.10 196,654.50	205.79 385.86 193.18 373.25	2.36 0.00 2.36 375.61	375.61
47787NAC3	John Deere Owner Trust 2020-B A3 0.51% Due 11/15/2024	07/14/2020 07/22/2020 215,000.00	214,975.32 0.00 0.00 214,976.09	48.73 91.38 48.73 91.38	0.77 0.00 0.77 92.15	92.15
47788EAC2	John Deere Owner Trust 2018-B A3 3.08% Due 11/15/2022	07/18/2018 07/25/2018 66,633.54	83,907.73 0.00 17,276.34 66,631.93	114.86 215.37 91.21 191.72	0.54 0.00 0.54 192.26	192.26
47789JAD8	John Deere Owner Trust 2019-A A3 2.91% Due 07/17/2023	06/24/2020 06/26/2020 314,539.91	351,505.36 0.00 31,828.90 318,886.41	447.97 839.94 406.80 798.77	0.00 790.05 (790.05) 8.72	8.72

Income Earned

As of June 30, 2021

CUSIP	Security Description	Trade Date Settle Date Units	Book Value: Begin Book Value: Acq Book Value: Disp Book Value: End	Prior Accrued Inc. Received Ending Accrued Total Interest	Accr. Of Discount Amort. Of Premium Net Accret/Amort Income Earned	Total Income
47789KAC7	John Deere Owner Trust 2020-A A3 1.1% Due 08/15/2024	03/04/2020 03/11/2020 460,000.00	459,979.66 0.00 0.00 459,980.18	224.89 421.67 224.89 421.67	0.52 0.00 0.52 422.19	422.19
48128BAB7	JP Morgan Chase & Co Callable Note 1X 1/15/2022 Due 01/15/2023	Various Various 0.00	848,220.51 0.00 848,283.60 0.00	9,543.42 11,087.21 0.00 1,543.79	67.86 4.77 63.09 1,606.88	1,606.88
58769EAC2	Mercedes-Benz Auto Lease Trust 2020-B A3 0.4% Due 11/15/2023	09/15/2020 09/23/2020 280,000.00	279,990.02 0.00 0.00 279,990.53	49.78 93.33 49.78 93.33	0.51 0.00 0.51 93.84	93.84
594918BP8	Microsoft Callable Note Cont 7/8/2021 1.55% Due 08/08/2021	Various 08/08/2016 590,000.00	589,973.89 0.00 0.00 589,985.41	2,870.52 0.00 3,632.60 762.08	11.52 0.00 11.52 773.60	773.60
65479JAD5	Nissan Auto Receivables Owner 2019-C A3 1.93% Due 07/15/2024	Various Various 980,000.00	983,565.35 0.00 0.00 983,471.53	840.62 1,576.17 840.62 1,576.17	0.53 94.35 (93.82) 1,482.35	1,482.35
69353RFE3	PNC Bank Callable Note Cont 6/28/2022 2.45% Due 07/28/2022	07/25/2017 07/28/2017 890,000.00	889,981.49 0.00 0.00 889,982.80	7,450.04 0.00 9,267.13 1,817.09	1.31 0.00 1.31 1,818.40	1,818.40
69371RP59	Paccar Financial Corp Note 3.4% Due 08/09/2023	Various Various 760,000.00	761,877.86 0.00 0.00 761,807.36	8,039.12 0.00 10,192.44 2,153.32	3.78 74.28 (70.50) 2,082.82	2,082.82
69371RQ25	Paccar Financial Corp Note 2.15% Due 08/15/2024	08/08/2019 08/15/2019 195,000.00	194,723.79 0.00 0.00 194,730.86	1,234.46 0.00 1,583.83 349.37	7.07 0.00 7.07 356.44	356.44
78015K7C2	Royal Bank of Canada Note 2.25% Due 11/01/2024	Various Various 1,100,000.00	1,101,509.73 0.00 0.00 1,101,473.47	2,062.50 0.00 4,125.00 2,062.50	7.85 44.11 (36.26) 2,026.24	2,026.24

Income Earned

As of June 30, 2021

CUSIP	Security Description	Trade Date Settle Date Units	Book Value: Begin Book Value: Acq Book Value: Disp Book Value: End	Prior Accrued Inc. Received Ending Accrued Total Interest	Accr. Of Discount Amort. Of Premium Net Accret/Amort Income Earned	Total Income
808513AT2	Charles Schwab Corp Callable Note Cont 12/25/2022 2.65% Due 01/25/2023	05/20/2019 05/22/2019 750,000.00	749,115.02 0.00 0.00 749,159.05	6,956.25 0.00 8,612.50 1,656.25	44.03 0.00 44.03 1,700.28	1,700.28
808513BN4	Charles Schwab Corp Callable Note Cont 2/18/2024 0.75% Due 03/18/2024	03/16/2021 03/18/2021 530,000.00	529,753.13 0.00 0.00 529,760.39	806.04 0.00 1,137.29 331.25	7.26 0.00 7.26 338.51	338.51
89114QCB2	Toronto Dominion Bank Note 3.25% Due 03/11/2024	Various Various 1,100,000.00	1,112,956.98 0.00 0.00 1,112,573.63	7,944.44 0.00 10,923.61 2,979.17	0.00 383.35 (383.35) 2,595.82	2,595.82
89236TDP7	Toyota Motor Credit Corp Note Due 01/11/2022	Various Various 0.00	747,584.38 0.00 747,767.71 0.00	7,583.33 8,504.17 0.00 920.84	183.33 0.00 183.33 1,104.17	1,104.17
89236TJD8	Toyota Motor Credit Corp Note 0.4% Due 04/06/2023	04/06/2021 04/09/2021 275,000.00	274,793.49 0.00 0.00 274,802.68	158.89 0.00 250.56 91.67	9.19 0.00 9.19 100.86	100.86
89236TJK2	Toyota Motor Credit Corp Note 1.125% Due 06/18/2026	06/15/2021 06/18/2021 995,000.00	0.00 994,562.20 0.00 994,565.32	0.00 0.00 404.22 404.22	3.12 0.00 3.12 407.34	407.34
89236XAC0	Toyota Auto Receivables 2020-D A3 0.35% Due 01/15/2025	10/06/2020 10/13/2020 370,000.00	369,941.31 0.00 0.00 369,942.64	57.56 107.92 57.56 107.92	1.33 0.00 1.33 109.25	109.25
89238TAD5	Toyota Auto Receivables Trust 2018-B A3 2.96% Due 09/15/2022	07/25/2019 07/29/2019 109,384.72	141,064.02 0.00 31,067.16 109,831.09	184.77 346.45 143.90 305.58	0.00 165.77 (165.77) 139.81	139.81
89240BAC2	Toyota Auto Receivables Owners 2021-A A3 0.26% Due 05/15/2025	02/02/2021 02/08/2021 810,000.00	809,864.68 0.00 0.00 809,868.67	93.60 175.50 93.60 175.50	3.99 0.00 3.99 179.49	179.49

Income Earned

As of June 30, 2021

CUSIP	Security Description	Trade Date Settle Date Units	Book Value: Begin Book Value: Acq Book Value: Disp Book Value: End	Prior Accrued Inc. Received Ending Accrued Total Interest	Accr. Of Discount Amort. Of Premium Net Accret/Amort Income Earned	Total Income
90331HPL1	US Bank NA Callable Note Cont 12/21/2024 2.05% Due 01/21/2025	01/16/2020 01/21/2020 955,000.00	953,519.20 0.00 0.00 953,552.60	7,069.65 0.00 8,701.11 1,631.46	33.40 0.00 33.40 1,664.86	1,664.86
9128283D0	US Treasury Note 2.25% Due 10/31/2024	11/07/2019 11/08/2019 1,500,000.00	1,523,276.18 0.00 0.00 1,522,716.66	2,934.78 0.00 5,686.14 2,751.36	0.00 559.52 (559.52) 2,191.84	2,191.84
912828B66	US Treasury Note 2.75% Due 02/15/2024	04/29/2019 04/30/2019 1,500,000.00	1,516,736.48 0.00 0.00 1,516,228.80	12,078.73 0.00 15,497.24 3,418.51	0.00 507.68 (507.68) 2,910.83	2,910.83
912828D56	US Treasury Note 2.375% Due 08/15/2024	03/05/2020 03/06/2020 1,500,000.00	1,580,154.52 0.00 0.00 1,578,101.03	10,431.63 0.00 13,383.98 2,952.35	0.00 2,053.49 (2,053.49) 898.86	898.86
912828F96	US Treasury Note 2% Due 10/31/2021	01/27/2017 01/30/2017 200,000.00	1,025,235.32 0.00 825,168.05 200,036.85	1,782.61 2,202.99 673.91 1,094.29	0.00 30.42 (30.42) 1,063.87	1,063.87
912828J43	US Treasury Note 1.75% Due 02/28/2022	03/13/2017 03/15/2017 1,360,000.00	1,356,306.40 0.00 0.00 1,356,713.78	6,014.67 0.00 7,954.89 1,940.22	407.38 0.00 407.38 2,347.60	2,347.60
912828L24	US Treasury Note 1.875% Due 08/31/2022	09/26/2017 09/27/2017 1,000,000.00	1,000,109.76 0.00 0.00 1,000,102.54	4,738.45 0.00 6,266.98 1,528.53	0.00 7.22 (7.22) 1,521.31	1,521.31
912828L57	US Treasury Note 1.75% Due 09/30/2022	10/17/2017 10/18/2017 1,240,000.00	1,236,302.25 0.00 0.00 1,236,530.50	3,675.96 0.00 5,454.64 1,778.68	228.25 0.00 228.25 2,006.93	2,006.93
912828N30	US Treasury Note 2.125% Due 12/31/2022	01/25/2018 01/26/2018 1,150,000.00	1,144,258.88 0.00 0.00 1,144,556.87	10,261.05 12,218.75 66.41 2,024.11	297.99 0.00 297.99 2,322.10	2,322.10

City of Brea

Account #120

Income Earned

As of June 30, 2021

CUSIP	Security Description	Trade Date Settle Date Units	Book Value: Begin Book Value: Acq Book Value: Disp Book Value: End	Prior Accrued Inc. Received Ending Accrued Total Interest	Accr. Of Discount Amort. Of Premium Net Accret/Amort Income Earned	Total Income
912828T91	US Treasury Note 1.625% Due 10/31/2023	05/29/2019 05/30/2019 1,500,000.00	1,485,248.09 0.00 0.00 1,485,749.85	2,119.57 0.00 4,106.66 1,987.09	501.76 0.00 501.76 2,488.85	2,488.85
912828V23	US Treasury Note 2.25% Due 12/31/2023	06/21/2019 06/24/2019 1,250,000.00	1,264,028.22 0.00 0.00 1,263,581.94	11,809.39 14,062.50 76.43 2,329.54	0.00 446.28 (446.28) 1,883.26	1,883.26
912828X70	US Treasury Note 2% Due 04/30/2024	06/10/2019 06/11/2019 1,000,000.00	1,002,095.59 0.00 0.00 1,002,036.50	1,739.13 0.00 3,369.57 1,630.44	0.00 59.09 (59.09) 1,571.35	1,571.35
912828XG0	US Treasury Note 2.125% Due 06/30/2022	08/15/2017 08/17/2017 1,100,000.00	1,103,457.21 0.00 0.00 1,103,193.98	9,814.92 11,687.50 63.52 1,936.10	0.00 263.23 (263.23) 1,672.87	1,672.87
912828XX3	US Treasury Note 2% Due 06/30/2024	12/12/2019 12/13/2019 1,450,000.00	1,461,240.31 0.00 0.00 1,460,940.57	12,176.80 14,500.00 78.80 2,402.00	0.00 299.74 (299.74) 2,102.26	2,102.26
912828ZC7	US Treasury Note 1.125% Due 02/28/2025	03/18/2020 03/19/2020 2,000,000.00	2,023,362.28 0.00 0.00 2,022,849.94	5,686.14 0.00 7,520.38 1,834.24	0.00 512.34 (512.34) 1,321.90	1,321.90
91282CAM3	US Treasury Note 0.25% Due 09/30/2025	02/19/2021 02/22/2021 1,900,000.00	1,878,696.44 0.00 0.00 1,879,100.42	804.64 0.00 1,193.99 389.35	403.98 0.00 403.98 793.33	793.33
91282CAT8	US Treasury Note 0.25% Due 10/31/2025	02/11/2021 02/12/2021 1,900,000.00	1,886,095.84 0.00 0.00 1,886,354.44	413.04 0.00 800.27 387.23	258.60 0.00 258.60 645.83	645.83
91282CAZ4	US Treasury Note 0.375% Due 11/30/2025	03/26/2021 03/29/2021 1,350,000.00	1,326,702.43 0.00 0.00 1,327,127.83	13.83 0.00 428.79 414.96	425.40 0.00 425.40 840.36	840.36

City of Brea

Account #120

Income Earned

As of June 30, 2021

CUSIP	Security Description	Trade Date Settle Date Units	Book Value: Begin Book Value: Acq Book Value: Disp Book Value: End	Prior Accrued Inc. Received Ending Accrued Total Interest	Accr. Of Discount Amort. Of Premium Net Accret/Amort Income Earned	Total Income
91282CBR1	US Treasury Note 0.25% Due 03/15/2024	03/30/2021 03/31/2021 950,000.00	947,831.30 0.00 0.00 947,895.21	503.40 0.00 697.01 193.61	63.91 0.00 63.91 257.52	257.52
91324PEC2	United Health Group Inc Callable Note Cont 4/15/2026 1.15% Due 05/15/2026	Various Various 240,000.00	0.00 240,776.80 0.00 240,770.33	0.00 (209.56) 322.00 112.44	0.00 6.47 (6.47) 105.97	105.97
92290BAA9	Verizon Owner Trust 2020-B A 0.47% Due 02/20/2025	08/04/2020 08/12/2020 650,000.00	649,887.70 0.00 0.00 649,890.17	93.35 254.58 93.35 254.58	2.47 0.00 2.47 257.05	257.05
92348AAA3	Verizon Owner Trust 2019-C A1A 1.94% Due 04/22/2024	10/01/2019 10/08/2019 370,000.00	369,981.83 0.00 0.00 369,982.35	219.33 598.17 219.33 598.17	0.52 0.00 0.52 598.69	598.69
931142EK5	Wal-Mart Stores Callable Note Cont 5/26/2023 3.4% Due 06/26/2023	04/26/2019 04/30/2019 904,000.00	916,059.98 0.00 0.00 915,560.26	13,233.56 15,368.00 426.89 2,561.33	0.00 499.72 (499.72) 2,061.61	2,061.61
			90,535,758.01 **3,168,555.80** **2,570,013.76**	**375,503.30** **166,598.82** **335,812.39**	**5,765.78** **14,306.72** **(8,540.94)**	
Total Fixed Income		**90,835,127.62**	**91,125,759.11**	**126,907.91**	**118,366.97**	**118,366.97**

City of Brea

Account #120

Income Earned

As of June 30, 2021

CUSIP	Security Description	Trade Date Settle Date Units	Book Value: Begin Book Value: Acq Book Value: Disp Book Value: End	Prior Accrued Inc. Received Ending Accrued Total Interest	Accr. Of Discount Amort. Of Premium Net Accret/Amort Income Earned	Total Income
CASH & EQUIVALENT						
316175884	Fidelity Institutional	06/15/2021	1,015,388.20	0.00	0.00	5.08
	Money Market Fund 696	06/16/2021	104,508.35	5.08	0.00	
		615,711.15	504,185.40	0.00	0.00	
			615,711.15	5.08	5.08	
			1,015,388.20	**0.00**	**0.00**	
			104,508.35	**5.08**	**0.00**	
			504,185.40	**0.00**	**0.00**	
Total Cash & Equivalent		**615,711.15**	**615,711.15**	**5.08**	**5.08**	**5.08**
			91,551,146.21	**375,503.30**	**5,765.78**	
			3,273,064.15	**166,603.90**	**14,306.72**	
			3,074,199.16	**335,812.39**	**(8,540.94)**	
TOTAL PORTFOLIO		**91,450,838.77**	**91,741,470.26**	**126,912.99**	**118,372.05**	**118,372.05**

City of Brea

Account #120

Cash Flow Report

As of June 30, 2021

Payment Date	Transaction Type	CUSIP	Quantity	Security Description	Principal Amount	Income	Total Amount
07/07/2021	Interest	3135G0X24	1,875,000.00	FNMA Note 1.625% Due 1/7/2025	0.00	15,234.38	15,234.38
07/12/2021	Purchase	79466LAG9	185,000.00	Salesforce.com Inc Callable Note Cont 7/15/2022 0.625% Due 7/15/2024	-184,905.65	0.00	-184,905.65
07/12/2021	Sale	316175884	184,905.65	Fidelity Institutional Money Market Fund 696	184,905.65	0.00	184,905.65
07/14/2021	Interest	02665WCJ8	225,000.00	American Honda Finance Note 3.45% Due 7/14/2023	0.00	3,881.25	3,881.25
07/14/2021	Maturity	3130A8QS5	1,085,000.00	FHLB Note 1.125% Due 7/14/2021	1,085,000.00	6,103.13	1,091,103.13
07/15/2021	Paydown	477870AC3	196,677.83	John Deere Owner Trust 2019-B A3 2.21% Due 12/15/2023	6,360.01	362.22	6,722.23
07/15/2021	Paydown	47789JAD8	314,539.91	John Deere Owner Trust 2019-A A3 2.91% Due 7/17/2023	22,123.56	762.76	22,886.32
07/15/2021	Paydown	58769EAC2	280,000.00	Mercedes-Benz Auto Lease Trust 2020-B A3 0.4% Due 11/15/2023	0.00	93.33	93.33
07/15/2021	Paydown	43813DAC2	280,000.00	Honda Auto Receivables 2020-2 A3 0.82% Due 7/15/2024	7,474.89	191.33	7,666.22
07/15/2021	Paydown	44933LAC7	400,000.00	Hyundai Auto Receivables Trust 2021-A A3 0.38% Due 9/15/2025	0.00	126.67	126.67
07/15/2021	Paydown	47789KAC7	460,000.00	John Deere Owner Trust 2020-A A3 1.1% Due 8/15/2024	11,500.40	421.67	11,922.07
07/15/2021	Paydown	65479JAD5	980,000.00	Nissan Auto Receivables Owner 2019-C A3 1.93% Due 7/15/2024	25,429.06	1,576.16	27,005.22
07/15/2021	Paydown	89236XAC0	370,000.00	Toyota Auto Receivables 2020-D A3 0.35% Due 1/15/2025	9,173.19	107.92	9,281.11
07/15/2021	Paydown	44891RAC4	470,000.00	Hyundai Auto Receivables Trust 2020-C A3 0.38% Due 5/15/2025	0.00	148.83	148.83
07/15/2021	Paydown	47788EAC2	66,633.54	John Deere Owner Trust 2018-B A3 3.08% Due 11/15/2022	3,770.25	171.03	3,941.28
07/15/2021	Paydown	43815NAC8	509,704.46	Honda Auto Receivables Trust 2019-3 A3 1.78% Due 8/15/2023	44,505.62	756.06	45,261.68
07/15/2021	Paydown	47787NAC3	215,000.00	John Deere Owner Trust 2020-B A3 0.51% Due 11/15/2024	0.00	91.38	91.38

Cash Flow Report

As of June 30, 2021

Payment Date	Transaction Type	CUSIP	Quantity	Security Description	Principal Amount	Income	Total Amount
07/15/2021	Paydown	89238TAD5	109,384.72	Toyota Auto Receivables Trust 2018-B A3 2.96% Due 9/15/2022	7,048.76	269.82	7,318.58
07/15/2021	Paydown	89240BAC2	810,000.00	Toyota Auto Receivables Owners 2021-A A3 0.26% Due 5/15/2025	0.00	175.50	175.50
07/17/2021	Interest	24422EVN6	640,000.00	John Deere Capital Corp Note 0.45% Due 1/17/2024	0.00	1,064.00	1,064.00
07/18/2021	Interest	4581X0CW6	1,275,000.00	Inter-American Dev Bank Note 2.125% Due 1/18/2022	0.00	13,546.88	13,546.88
07/18/2021	Paydown	43813KAC6	465,000.00	Honda Auto Receivables Trust 2020-3 A3 0.37% Due 10/18/2024	0.00	143.38	143.38
07/19/2021	Interest	3135G0T94	625,000.00	FNMA Note 2.375% Due 1/19/2023	0.00	7,421.88	7,421.88
07/20/2021	Paydown	92290BAA9	650,000.00	Verizon Owner Trust 2020-B A 0.47% Due 2/20/2025	14,648.70	254.58	14,903.28
07/20/2021	Paydown	92348AAA3	370,000.00	Verizon Owner Trust 2019-C A1A 1.94% Due 4/22/2024	10,172.52	598.17	10,770.69
07/21/2021	Interest	90331HPL1	955,000.00	US Bank NA Callable Note Cont 12/21/2024 2.05% Due 1/21/2025	0.00	9,788.75	9,788.75
07/21/2021	Interest	3137EAEU9	1,800,000.00	FHLMC Note 0.375% Due 7/21/2025	0.00	3,375.01	3,375.01
07/21/2021	Paydown	43813GAC5	230,000.00	Honda Auto Receivables Trust 2021-1 A3 0.27% Due 4/21/2025	0.00	51.75	51.75
07/21/2021	Paydown	43815HAC1	82,187.16	Honda Auto Receivables Trust 2018-3 A3 2.95% Due 8/22/2022	5,385.48	202.04	5,587.52
07/25/2021	Interest	808513AT2	750,000.00	Charles Schwab Corp Callable Note Cont 12/25/2022 2.65% Due 1/25/2023	0.00	9,937.50	9,937.50
07/28/2021	Interest	69353RFE3	890,000.00	PNC Bank Callable Note Cont 6/28/2022 2.45% Due 7/28/2022	0.00	10,902.50	10,902.50
JUL 2021					**1,252,592.44**	**87,759.88**	**1,340,352.32**
08/08/2021	Maturity	594918BP8	590,000.00	Microsoft Callable Note Cont 7/8/2021 1.55% Due 8/8/2021	590,000.00	4,572.50	594,572.50
08/09/2021	Interest	69371RP59	760,000.00	Paccar Financial Corp Note 3.4% Due 8/9/2023	0.00	12,920.00	12,920.00

City of Brea

Account #120

Cash Flow Report

As of June 30, 2021

Payment Date	Transaction Type	CUSIP	Quantity	Security Description	Principal Amount	Income	Total Amount
08/11/2021	Interest	06406RAJ6	250,000.00	Bank of NY Mellon Corp Note 3.45% Due 8/11/2023	0.00	4,312.50	4,312.50
08/12/2021	Interest	3137EAEP0	1,920,000.00	FHLMC Note 1.5% Due 2/12/2025	0.00	14,400.00	14,400.00
08/15/2021	Interest	69371RQ25	195,000.00	Paccar Financial Corp Note 2.15% Due 8/15/2024	0.00	2,096.25	2,096.25
08/15/2021	Interest	912828B66	1,500,000.00	US Treasury Note 2.75% Due 2/15/2024	0.00	20,625.00	20,625.00
08/15/2021	Interest	912828D56	1,500,000.00	US Treasury Note 2.375% Due 8/15/2024	0.00	17,812.50	17,812.50
08/15/2021	Paydown	477870AC3	196,677.83	John Deere Owner Trust 2019-B A3 2.21% Due 12/15/2023	6,373.27	350.50	6,723.77
08/15/2021	Paydown	47787NAC3	215,000.00	John Deere Owner Trust 2020-B A3 0.51% Due 11/15/2024	0.00	91.38	91.38
08/15/2021	Paydown	89238TAD5	109,384.72	Toyota Auto Receivables Trust 2018-B A3 2.96% Due 9/15/2022	7,082.83	252.43	7,335.26
08/15/2021	Paydown	89240BAC2	810,000.00	Toyota Auto Receivables Owners 2021-A A3 0.26% Due 5/15/2025	0.00	175.50	175.50
08/15/2021	Paydown	65479JAD5	980,000.00	Nissan Auto Receivables Owner 2019-C A3 1.93% Due 7/15/2024	25,486.27	1,535.27	27,021.54
08/15/2021	Paydown	89236XAC0	370,000.00	Toyota Auto Receivables 2020-D A3 0.35% Due 1/15/2025	9,149.95	105.24	9,255.19
08/15/2021	Paydown	43813DAC2	280,000.00	Honda Auto Receivables 2020-2 A3 0.82% Due 7/15/2024	7,479.99	186.23	7,666.22
08/15/2021	Paydown	43815NAC8	509,704.46	Honda Auto Receivables Trust 2019-3 A3 1.78% Due 8/15/2023	43,017.72	690.04	43,707.76
08/15/2021	Paydown	44933LAC7	400,000.00	Hyundai Auto Receivables Trust 2021-A A3 0.38% Due 9/15/2025	0.00	126.67	126.67
08/15/2021	Paydown	47788EAC2	66,633.54	John Deere Owner Trust 2018-B A3 3.08% Due 11/15/2022	3,788.48	161.35	3,949.83
08/15/2021	Paydown	47789KAC7	460,000.00	John Deere Owner Trust 2020-A A3 1.1% Due 8/15/2024	11,532.03	411.12	11,943.15
08/15/2021	Paydown	44891RAC4	470,000.00	Hyundai Auto Receivables Trust 2020-C A3 0.38% Due 5/15/2025	0.00	148.83	148.83

Cash Flow Report

As of June 30, 2021

Payment Date	Transaction Type	CUSIP	Quantity	Security Description	Principal Amount	Income	Total Amount
08/15/2021	Paydown	47789JAD8	314,539.91	John Deere Owner Trust 2019-A A3 2.91% Due 7/17/2023	22,175.92	709.11	22,885.03
08/15/2021	Paydown	58769EAC2	280,000.00	Mercedes-Benz Auto Lease Trust 2020-B A3 0.4% Due 11/15/2023	0.00	93.33	93.33
08/18/2021	Paydown	43813KAC6	465,000.00	Honda Auto Receivables Trust 2020-3 A3 0.37% Due 10/18/2024	0.00	143.38	143.38
08/20/2021	Paydown	92348AAA3	370,000.00	Verizon Owner Trust 2019-C A1A 1.94% Due 4/22/2024	10,195.41	581.72	10,777.13
08/20/2021	Paydown	92290BAA9	650,000.00	Verizon Owner Trust 2020-B A 0.47% Due 2/20/2025	14,654.43	248.85	14,903.28
08/21/2021	Paydown	43813GAC5	230,000.00	Honda Auto Receivables Trust 2021-1 A3 0.27% Due 4/21/2025	0.00	51.75	51.75
08/21/2021	Paydown	43815HAC1	82,187.16	Honda Auto Receivables Trust 2018-3 A3 2.95% Due 8/22/2022	5,398.72	188.80	5,587.52
08/24/2021	Interest	3137EAEV7	1,025,000.00	FHLMC Note 0.25% Due 8/24/2023	0.00	1,281.25	1,281.25
08/25/2021	Interest	3135G05X7	1,800,000.00	FNMA Note 0.375% Due 8/25/2025	0.00	3,375.00	3,375.00
08/31/2021	Interest	912828J43	1,360,000.00	US Treasury Note 1.75% Due 2/28/2022	0.00	11,900.00	11,900.00
08/31/2021	Interest	912828ZC7	2,000,000.00	US Treasury Note 1.125% Due 2/28/2025	0.00	11,250.00	11,250.00
08/31/2021	Interest	912828L24	1,000,000.00	US Treasury Note 1.875% Due 8/31/2022	0.00	9,375.00	9,375.00
AUG 2021					**756,335.02**	**120,171.50**	**876,506.52**
09/05/2021	Interest	06051GHF9	1,100,000.00	Bank of America Corp Callable Note 1X 3/5/2023 3.55% Due 3/5/2024	0.00	19,525.00	19,525.00
09/06/2021	Interest	24422ETG4	650,000.00	John Deere Capital Corp Note 2.8% Due 3/6/2023	0.00	9,100.00	9,100.00
09/08/2021	Interest	3130AB3H7	1,500,000.00	FHLB Note 2.375% Due 3/8/2024	0.00	17,812.50	17,812.50
09/08/2021	Interest	313383YJ4	1,200,000.00	FHLB Note 3.375% Due 9/8/2023	0.00	20,250.00	20,250.00

City of Brea

Account #120

Cash Flow Report

As of June 30, 2021

Payment Date	Transaction Type	CUSIP	Quantity	Security Description	Principal Amount	Income	Total Amount
09/11/2021	Interest	89114QCB2	1,100,000.00	Toronto Dominion Bank Note 3.25% Due 3/11/2024	0.00	17,875.00	17,875.00
09/12/2021	Interest	3135G0U43	1,500,000.00	FNMA Note 2.875% Due 9/12/2023	0.00	21,562.50	21,562.50
09/13/2021	Interest	3130A2UW4	1,200,000.00	FHLB Note 2.875% Due 9/13/2024	0.00	17,250.00	17,250.00
09/14/2021	Interest	4581X0CZ9	800,000.00	Inter-American Dev Bank Note 1.75% Due 9/14/2022	0.00	7,000.00	7,000.00
09/15/2021	Interest	91282CBR1	950,000.00	US Treasury Note 0.25% Due 3/15/2024	0.00	1,187.50	1,187.50
09/15/2021	Paydown	43813DAC2	280,000.00	Honda Auto Receivables 2020-2 A3 0.82% Due 7/15/2024	7,485.11	181.11	7,666.22
09/15/2021	Paydown	477870AC3	196,677.83	John Deere Owner Trust 2019-B A3 2.21% Due 12/15/2023	6,386.55	338.76	6,725.31
09/15/2021	Paydown	47789KAC7	460,000.00	John Deere Owner Trust 2020-A A3 1.1% Due 8/15/2024	11,563.74	400.55	11,964.29
09/15/2021	Paydown	89236XAC0	370,000.00	Toyota Auto Receivables 2020-D A3 0.35% Due 1/15/2025	9,126.44	102.57	9,229.01
09/15/2021	Paydown	89240BAC2	810,000.00	Toyota Auto Receivables Owners 2021-A A3 0.26% Due 5/15/2025	0.00	175.50	175.50
09/15/2021	Paydown	44933LAC7	400,000.00	Hyundai Auto Receivables Trust 2021-A A3 0.38% Due 9/15/2025	0.00	126.67	126.67
09/15/2021	Paydown	47789JAD8	314,539.91	John Deere Owner Trust 2019-A A3 2.91% Due 7/17/2023	22,228.40	655.33	22,883.73
09/15/2021	Paydown	58769EAC2	280,000.00	Mercedes-Benz Auto Lease Trust 2020-B A3 0.4% Due 11/15/2023	0.00	93.33	93.33
09/15/2021	Paydown	65479JAD5	980,000.00	Nissan Auto Receivables Owner 2019-C A3 1.93% Due 7/15/2024	25,543.61	1,494.28	27,037.89
09/15/2021	Paydown	43815NAC8	509,704.46	Honda Auto Receivables Trust 2019-3 A3 1.78% Due 8/15/2023	41,526.20	626.24	42,152.44
09/15/2021	Paydown	47788EAC2	66,633.54	John Deere Owner Trust 2018-B A3 3.08% Due 11/15/2022	3,806.78	151.63	3,958.41
09/15/2021	Paydown	44891RAC4	470,000.00	Hyundai Auto Receivables Trust 2020-C A3 0.38% Due 5/15/2025	0.00	148.83	148.83

Cash Flow Report

As of June 30, 2021

Payment Date	Transaction Type	CUSIP	Quantity	Security Description	Principal Amount	Income	Total Amount
09/15/2021	Paydown	47787NAC3	215,000.00	John Deere Owner Trust 2020-B A3 0.51% Due 11/15/2024	0.00	91.38	91.38
09/15/2021	Paydown	89238TAD5	109,384.72	Toyota Auto Receivables Trust 2018-B A3 2.96% Due 9/15/2022	7,117.06	234.96	7,352.02
09/18/2021	Interest	808513BN4	530,000.00	Charles Schwab Corp Callable Note Cont 2/18/2024 0.75% Due 3/18/2024	0.00	1,987.50	1,987.50
09/18/2021	Paydown	43813KAC6	465,000.00	Honda Auto Receivables Trust 2020-3 A3 0.37% Due 10/18/2024	0.00	143.38	143.38
09/20/2021	Paydown	92348AAA3	370,000.00	Verizon Owner Trust 2019-C A1A 1.94% Due 4/22/2024	10,218.35	565.24	10,783.59
09/20/2021	Paydown	92290BAA9	650,000.00	Verizon Owner Trust 2020-B A 0.47% Due 2/20/2025	14,660.17	243.11	14,903.28
09/21/2021	Paydown	43813GAC5	230,000.00	Honda Auto Receivables Trust 2021-1 A3 0.27% Due 4/21/2025	0.00	51.75	51.75
09/21/2021	Paydown	43815HAC1	82,187.16	Honda Auto Receivables Trust 2018-3 A3 2.95% Due 8/22/2022	5,411.99	175.53	5,587.52
09/23/2021	Interest	3137EAEX3	1,805,000.00	FHLMC Note 0.375% Due 9/23/2025	0.00	3,384.38	3,384.38
09/30/2021	Interest	91282CAM3	1,900,000.00	US Treasury Note 0.25% Due 9/30/2025	0.00	2,375.00	2,375.00
09/30/2021	Interest	912828L57	1,240,000.00	US Treasury Note 1.75% Due 9/30/2022	0.00	10,850.00	10,850.00
SEP 2021					**165,074.40**	**156,159.53**	**321,233.93**
10/01/2021	Interest	13063DRK6	900,000.00	California State Taxable GO 2.4% Due 10/1/2024	0.00	10,800.00	10,800.00
10/06/2021	Interest	89236TJD8	275,000.00	Toyota Motor Credit Corp Note 0.4% Due 4/6/2023	0.00	540.83	540.83
10/10/2021	Interest	02665WCQ2	750,000.00	American Honda Finance Note 3.625% Due 10/10/2023	0.00	13,593.75	13,593.75
10/12/2021	Maturity	3130AF5B9	1,350,000.00	FHLB Note 3% Due 10/12/2021	1,350,000.00	20,250.00	1,370,250.00
10/15/2021	Interest	3135G0W66	1,755,000.00	FNMA Note 1.625% Due 10/15/2024	0.00	14,259.38	14,259.38

City of Brea

Account #120

Cash Flow Report

As of June 30, 2021

Payment Date	Transaction Type	CUSIP	Quantity	Security Description	Principal Amount	Income	Total Amount
10/15/2021	Paydown	47787NAC3	215,000.00	John Deere Owner Trust 2020-B A3 0.51% Due 11/15/2024	0.00	91.38	91.38
10/15/2021	Paydown	65479JAD5	980,000.00	Nissan Auto Receivables Owner 2019-C A3 1.93% Due 7/15/2024	25,601.09	1,453.19	27,054.28
10/15/2021	Paydown	89238TAD5	109,384.72	Toyota Auto Receivables Trust 2018-B A3 2.96% Due 9/15/2022	7,151.47	217.40	7,368.87
10/15/2021	Paydown	89240BAC2	810,000.00	Toyota Auto Receivables Owners 2021-A A3 0.26% Due 5/15/2025	0.00	175.50	175.50
10/15/2021	Paydown	43815NAC8	509,704.46	Honda Auto Receivables Trust 2019-3 A3 1.78% Due 8/15/2023	40,031.08	564.64	40,595.72
10/15/2021	Paydown	43813DAC2	280,000.00	Honda Auto Receivables 2020-2 A3 0.82% Due 7/15/2024	7,490.22	176.00	7,666.22
10/15/2021	Paydown	44891RAC4	470,000.00	Hyundai Auto Receivables Trust 2020-C A3 0.38% Due 5/15/2025	0.00	148.83	148.83
10/15/2021	Paydown	47788EAC2	66,633.54	John Deere Owner Trust 2018-B A3 3.08% Due 11/15/2022	3,825.19	141.85	3,967.04
10/15/2021	Paydown	47789KAC7	460,000.00	John Deere Owner Trust 2020-A A3 1.1% Due 8/15/2024	11,595.54	389.95	11,985.49
10/15/2021	Paydown	89236XAC0	370,000.00	Toyota Auto Receivables 2020-D A3 0.35% Due 1/15/2025	9,102.67	99.91	9,202.58
10/15/2021	Paydown	477870AC3	196,677.83	John Deere Owner Trust 2019-B A3 2.21% Due 12/15/2023	6,399.85	327.00	6,726.85
10/15/2021	Paydown	44933LAC7	400,000.00	Hyundai Auto Receivables Trust 2021-A A3 0.38% Due 9/15/2025	0.00	126.67	126.67
10/15/2021	Paydown	47789JAD8	314,539.91	John Deere Owner Trust 2019-A A3 2.91% Due 7/17/2023	22,281.01	601.43	22,882.44
10/15/2021	Paydown	58769EAC2	280,000.00	Mercedes-Benz Auto Lease Trust 2020-B A3 0.4% Due 11/15/2023	0.00	93.33	93.33
10/18/2021	Paydown	43813KAC6	465,000.00	Honda Auto Receivables Trust 2020-3 A3 0.37% Due 10/18/2024	0.00	143.38	143.38
10/20/2021	Interest	4581X0DV7	1,915,000.00	Inter-American Dev Bank Note 0.875% Due 4/20/2026	0.00	8,378.13	8,378.13
10/20/2021	Paydown	92348AAA3	370,000.00	Verizon Owner Trust 2019-C A1A 1.94% Due 4/22/2024	10,241.34	548.72	10,790.06

Cash Flow Report

As of June 30, 2021

Payment Date	Transaction Type	CUSIP	Quantity	Security Description	Principal Amount	Income	Total Amount
10/20/2021	Paydown	92290BAA9	650,000.00	Verizon Owner Trust 2020-B A 0.47% Due 2/20/2025	14,665.92	237.36	14,903.28
10/21/2021	Paydown	43813GAC5	230,000.00	Honda Auto Receivables Trust 2021-1 A3 0.27% Due 4/21/2025	0.00	51.75	51.75
10/21/2021	Paydown	43815HAC1	82,187.16	Honda Auto Receivables Trust 2018-3 A3 2.95% Due 8/22/2022	5,425.29	162.23	5,587.52
10/22/2021	Interest	3135G03U5	1,510,000.00	FNMA Note 0.625% Due 4/22/2025	0.00	4,718.75	4,718.75
10/22/2021	Interest	46647PBK1	312,000.00	JP Morgan Chase & Co Callable Note Cont 4/22/2025 2.083% Due 4/22/2026	0.00	3,249.48	3,249.48
10/28/2021	Interest	459058JL8	945,000.00	Intl. Bank Recon & Development Note 0.5% Due 10/28/2025	0.00	2,362.50	2,362.50
10/28/2021	Interest	06406RAG2	800,000.00	Bank of NY Mellon Corp Note 3.5% Due 4/28/2023	0.00	14,000.00	14,000.00
10/31/2021	Interest	912828T91	1,500,000.00	US Treasury Note 1.625% Due 10/31/2023	0.00	12,187.50	12,187.50
10/31/2021	Interest	912828X70	1,000,000.00	US Treasury Note 2% Due 4/30/2024	0.00	10,000.00	10,000.00
10/31/2021	Interest	91282CAT8	1,900,000.00	US Treasury Note 0.25% Due 10/31/2025	0.00	2,375.00	2,375.00
10/31/2021	Interest	9128283D0	1,500,000.00	US Treasury Note 2.25% Due 10/31/2024	0.00	16,875.00	16,875.00
10/31/2021	Maturity	912828F96	200,000.00	US Treasury Note 2% Due 10/31/2021	200,000.00	2,000.00	202,000.00
OCT 2021					**1,713,810.67**	**141,340.84**	**1,855,151.51**
11/01/2021	Interest	78015K7C2	1,100,000.00	Royal Bank of Canada Note 2.25% Due 11/1/2024	0.00	12,375.00	12,375.00
11/03/2021	Interest	037833AK6	900,000.00	Apple Inc Note 2.4% Due 5/3/2023	0.00	10,800.00	10,800.00
11/05/2021	Interest	3137EAER6	1,660,000.00	FHLMC Note 0.375% Due 5/5/2023	0.00	3,112.50	3,112.50
11/07/2021	Interest	3135G06G3	1,825,000.00	FNMA Note 0.5% Due 11/7/2025	0.00	4,562.50	4,562.50

City of Brea

Account #120

Cash Flow Report

As of June 30, 2021

Payment Date	Transaction Type	CUSIP	Quantity	Security Description	Principal Amount	Income	Total Amount
11/08/2021	Interest	14913Q3B3	1,100,000.00	Caterpillar Finl Service Note 2.15% Due 11/8/2024	0.00	11,825.00	11,825.00
11/12/2021	Interest	023135BX3	1,455,000.00	Amazon.com Inc Callable Note Cont 4/12/2026 1% Due 5/12/2026	0.00	7,275.00	7,275.00
11/15/2021	Interest	91324PEC2	240,000.00	United Health Group Inc Callable Note Cont 4/15/2026 1.15% Due 5/15/2026	0.00	1,349.34	1,349.34
11/15/2021	Paydown	43815NAC8	509,704.46	Honda Auto Receivables Trust 2019-3 A3 1.78% Due 8/15/2023	38,532.35	505.26	39,037.61
11/15/2021	Paydown	47787NAC3	215,000.00	John Deere Owner Trust 2020-B A3 0.51% Due 11/15/2024	0.00	91.38	91.38
11/15/2021	Paydown	89238TAD5	109,384.72	Toyota Auto Receivables Trust 2018-B A3 2.96% Due 9/15/2022	7,186.03	199.76	7,385.79
11/15/2021	Paydown	477870AC3	196,677.83	John Deere Owner Trust 2019-B A3 2.21% Due 12/15/2023	6,413.18	315.22	6,728.40
11/15/2021	Paydown	47789JAD8	314,539.91	John Deere Owner Trust 2019-A A3 2.91% Due 7/17/2023	22,333.74	547.40	22,881.14
11/15/2021	Paydown	58769EAC2	280,000.00	Mercedes-Benz Auto Lease Trust 2020-B A3 0.4% Due 11/15/2023	0.00	93.33	93.33
11/15/2021	Paydown	43813DAC2	280,000.00	Honda Auto Receivables 2020-2 A3 0.82% Due 7/15/2024	7,495.34	170.88	7,666.22
11/15/2021	Paydown	44933LAC7	400,000.00	Hyundai Auto Receivables Trust 2021-A A3 0.38% Due 9/15/2025	0.00	126.67	126.67
11/15/2021	Paydown	47789KAC7	460,000.00	John Deere Owner Trust 2020-A A3 1.1% Due 8/15/2024	11,627.43	379.32	12,006.75
11/15/2021	Paydown	65479JAD5	980,000.00	Nissan Auto Receivables Owner 2019-C A3 1.93% Due 7/15/2024	25,658.69	1,412.02	27,070.71
11/15/2021	Paydown	89236XAC0	370,000.00	Toyota Auto Receivables 2020-D A3 0.35% Due 1/15/2025	9,078.63	97.26	9,175.89
11/15/2021	Paydown	89240BAC2	810,000.00	Toyota Auto Receivables Owners 2021-A A3 0.26% Due 5/15/2025	0.00	175.50	175.50
11/15/2021	Paydown	44891RAC4	470,000.00	Hyundai Auto Receivables Trust 2020-C A3 0.38% Due 5/15/2025	0.00	148.83	148.83

Cash Flow Report

As of June 30, 2021

Payment Date	Transaction Type	CUSIP	Quantity	Security Description	Principal Amount	Income	Total Amount
11/15/2021	Paydown	47788EAC2	66,633.54	John Deere Owner Trust 2018-B A3 3.08% Due 11/15/2022	3,843.67	132.04	3,975.71
11/18/2021	Interest	404280BS7	1,100,000.00	HSBC Holdings PLC Callable Note 1X 5/18/2023 3.95% Due 5/18/2024	0.00	21,725.00	21,725.00
11/18/2021	Paydown	43813KAC6	465,000.00	Honda Auto Receivables Trust 2020-3 A3 0.37% Due 10/18/2024	0.00	143.38	143.38
11/20/2021	Paydown	92348AAA3	370,000.00	Verizon Owner Trust 2019-C A1A 1.94% Due 4/22/2024	10,264.39	532.16	10,796.55
11/20/2021	Paydown	92290BAA9	650,000.00	Verizon Owner Trust 2020-B A 0.47% Due 2/20/2025	14,671.66	231.62	14,903.28
11/21/2021	Paydown	43813GAC5	230,000.00	Honda Auto Receivables Trust 2021-1 A3 0.27% Due 4/21/2025	0.00	51.75	51.75
11/21/2021	Paydown	43815HAC1	82,187.16	Honda Auto Receivables Trust 2018-3 A3 2.95% Due 8/22/2022	5,438.63	148.89	5,587.52
11/27/2021	Interest	3135G06H1	1,610,000.00	FNMA Note 0.25% Due 11/27/2023	0.00	2,012.50	2,012.50
11/30/2021	Interest	91282CAZ4	1,350,000.00	US Treasury Note 0.375% Due 11/30/2025	0.00	2,531.25	2,531.25
NOV 2021					**162,543.74**	**83,070.76**	**245,614.50**
12/01/2021	Interest	46647PCH7	985,000.00	JP Morgan Chase & Co Callable Note Cont 6/1/2024 0.824% Due 6/1/2025	0.00	4,058.20	4,058.20
12/08/2021	Interest	3130A0F70	1,075,000.00	FHLB Note 3.375% Due 12/8/2023	0.00	18,140.63	18,140.63
12/09/2021	Interest	3130A3KM5	775,000.00	FHLB Note 2.5% Due 12/9/2022	0.00	9,687.50	9,687.50
12/14/2021	Interest	3130A1XJ2	1,500,000.00	FHLB Note 2.875% Due 6/14/2024	0.00	21,562.51	21,562.51
12/15/2021	Paydown	477870AC3	196,677.83	John Deere Owner Trust 2019-B A3 2.21% Due 12/15/2023	6,426.54	303.41	6,729.95
12/15/2021	Paydown	47787NAC3	215,000.00	John Deere Owner Trust 2020-B A3 0.51% Due 11/15/2024	0.00	91.38	91.38
12/15/2021	Paydown	89238TAD5	109,384.72	Toyota Auto Receivables Trust 2018-B A3 2.96% Due 9/15/2022	7,220.76	182.04	7,402.80

Cash Flow Report

As of June 30, 2021

Payment Date	Transaction Type	CUSIP	Quantity	Security Description	Principal Amount	Income	Total Amount
12/15/2021	Paydown	89240BAC2	810,000.00	Toyota Auto Receivables Owners 2021-A A3 0.26% Due 5/15/2025	0.00	175.50	175.50
12/15/2021	Paydown	44891RAC4	470,000.00	Hyundai Auto Receivables Trust 2020-C A3 0.38% Due 5/15/2025	0.00	148.83	148.83
12/15/2021	Paydown	47789JAD8	314,539.91	John Deere Owner Trust 2019-A A3 2.91% Due 7/17/2023	22,386.60	493.24	22,879.84
12/15/2021	Paydown	58769EAC2	280,000.00	Mercedes-Benz Auto Lease Trust 2020-B A3 0.4% Due 11/15/2023	0.00	93.33	93.33
12/15/2021	Paydown	65479JAD5	980,000.00	Nissan Auto Receivables Owner 2019-C A3 1.93% Due 7/15/2024	25,716.42	1,370.75	27,087.17
12/15/2021	Paydown	43813DAC2	280,000.00	Honda Auto Receivables 2020-2 A3 0.82% Due 7/15/2024	7,500.46	165.76	7,666.22
12/15/2021	Paydown	43815NAC8	509,704.46	Honda Auto Receivables Trust 2019-3 A3 1.78% Due 8/15/2023	37,029.99	448.10	37,478.09
12/15/2021	Paydown	44933LAC7	400,000.00	Hyundai Auto Receivables Trust 2021-A A3 0.38% Due 9/15/2025	0.00	126.67	126.67
12/15/2021	Paydown	47788EAC2	66,633.54	John Deere Owner Trust 2018-B A3 3.08% Due 11/15/2022	3,862.25	122.17	3,984.42
12/15/2021	Paydown	47789KAC7	460,000.00	John Deere Owner Trust 2020-A A3 1.1% Due 8/15/2024	11,659.40	368.67	12,028.07
12/15/2021	Paydown	89236XAC0	370,000.00	Toyota Auto Receivables 2020-D A3 0.35% Due 1/15/2025	9,054.34	94.61	9,148.95
12/17/2021	Interest	3135G04Z3	1,800,000.00	FNMA Note 0.5% Due 6/17/2025	0.00	4,500.00	4,500.00
12/18/2021	Interest	89236TJK2	995,000.00	Toyota Motor Credit Corp Note 1.125% Due 6/18/2026	0.00	5,596.88	5,596.88
12/18/2021	Paydown	43813KAC6	465,000.00	Honda Auto Receivables Trust 2020-3 A3 0.37% Due 10/18/2024	0.00	143.38	143.38
12/19/2021	Interest	06051GJD2	475,000.00	Bank of America Corp Callable Note Cont 6/19/2025 1.319% Due 6/19/2026	0.00	3,132.63	3,132.63
12/19/2021	Interest	3137EAEN5	1,200,000.00	FHLMC Note 2.75% Due 6/19/2023	0.00	16,500.00	16,500.00
12/20/2021	Paydown	92348AAA3	370,000.00	Verizon Owner Trust 2019-C A1A 1.94% Due 4/22/2024	10,287.48	515.57	10,803.05

Cash Flow Report

As of June 30, 2021

Payment Date	Transaction Type	CUSIP	Quantity	Security Description	Principal Amount	Income	Total Amount
12/20/2021	Paydown	92290BAA9	650,000.00	Verizon Owner Trust 2020-B A 0.47% Due 2/20/2025	14,677.41	225.87	14,903.28
12/21/2021	Paydown	43813GAC5	230,000.00	Honda Auto Receivables Trust 2021-1 A3 0.27% Due 4/21/2025	0.00	51.75	51.75
12/21/2021	Paydown	43815HAC1	82,187.16	Honda Auto Receivables Trust 2018-3 A3 2.95% Due 8/22/2022	5,452.00	135.52	5,587.52
12/23/2021	Interest	46647PCK0	470,000.00	JP Morgan Chase & Co Callable Note Cont 6/23/2024 0.969% Due 6/23/2025	0.00	2,277.16	2,277.16
12/26/2021	Interest	931142EK5	904,000.00	Wal-Mart Stores Callable Note Cont 5/26/2023 3.4% Due 6/26/2023	0.00	15,368.00	15,368.00
12/31/2021	Interest	912828V23	1,250,000.00	US Treasury Note 2.25% Due 12/31/2023	0.00	14,062.50	14,062.50
12/31/2021	Interest	912828N30	1,150,000.00	US Treasury Note 2.125% Due 12/31/2022	0.00	12,218.75	12,218.75
12/31/2021	Interest	912828XX3	1,450,000.00	US Treasury Note 2% Due 6/30/2024	0.00	14,500.00	14,500.00
12/31/2021	Interest	912828XG0	1,100,000.00	US Treasury Note 2.125% Due 6/30/2022	0.00	11,687.50	11,687.50
DEC 2021					**161,273.65**	**158,548.81**	**319,822.46**
01/07/2022	Interest	3135G0X24	1,875,000.00	FNMA Note 1.625% Due 1/7/2025	0.00	15,234.38	15,234.38
01/14/2022	Interest	02665WCJ8	225,000.00	American Honda Finance Note 3.45% Due 7/14/2023	0.00	3,881.25	3,881.25
01/15/2022	Paydown	477870AC3	196,677.83	John Deere Owner Trust 2019-B A3 2.21% Due 12/15/2023	6,439.93	291.57	6,731.50
01/15/2022	Paydown	47789JAD8	314,539.91	John Deere Owner Trust 2019-A A3 2.91% Due 7/17/2023	22,439.58	438.95	22,878.53
01/15/2022	Paydown	58769EAC2	280,000.00	Mercedes-Benz Auto Lease Trust 2020-B A3 0.4% Due 11/15/2023	0.00	93.33	93.33
01/15/2022	Paydown	89238TAD5	109,384.72	Toyota Auto Receivables Trust 2018-B A3 2.96% Due 9/15/2022	7,255.66	164.23	7,419.89
01/15/2022	Paydown	44891RAC4	470,000.00	Hyundai Auto Receivables Trust 2020-C A3 0.38% Due 5/15/2025	0.00	148.83	148.83

Cash Flow Report

As of June 30, 2021

Payment Date	Transaction Type	CUSIP	Quantity	Security Description	Principal Amount	Income	Total Amount
01/15/2022	Paydown	44933LAC7	400,000.00	Hyundai Auto Receivables Trust 2021-A A3 0.38% Due 9/15/2025	0.00	126.67	126.67
01/15/2022	Paydown	47788EAC2	66,633.54	John Deere Owner Trust 2018-B A3 3.08% Due 11/15/2022	3,880.92	112.26	3,993.18
01/15/2022	Paydown	47787NAC3	215,000.00	John Deere Owner Trust 2020-B A3 0.51% Due 11/15/2024	0.00	91.38	91.38
01/15/2022	Paydown	89240BAC2	810,000.00	Toyota Auto Receivables Owners 2021-A A3 0.26% Due 5/15/2025	0.00	175.50	175.50
01/15/2022	Paydown	43813DAC2	280,000.00	Honda Auto Receivables 2020-2 A3 0.82% Due 7/15/2024	7,505.59	160.63	7,666.22
01/15/2022	Paydown	43815NAC8	509,704.46	Honda Auto Receivables Trust 2019-3 A3 1.78% Due 8/15/2023	35,524.00	393.17	35,917.17
01/15/2022	Paydown	47789KAC7	460,000.00	John Deere Owner Trust 2020-A A3 1.1% Due 8/15/2024	11,691.46	357.98	12,049.44
01/15/2022	Paydown	65479JAD5	980,000.00	Nissan Auto Receivables Owner 2019-C A3 1.93% Due 7/15/2024	25,774.28	1,329.39	27,103.67
01/15/2022	Paydown	89236XAC0	370,000.00	Toyota Auto Receivables 2020-D A3 0.35% Due 1/15/2025	9,029.77	91.97	9,121.74
01/17/2022	Interest	24422EVN6	640,000.00	John Deere Capital Corp Note 0.45% Due 1/17/2024	0.00	1,440.00	1,440.00
01/18/2022	Maturity	4581X0CW6	1,275,000.00	Inter-American Dev Bank Note 2.125% Due 1/18/2022	1,275,000.00	13,546.88	1,288,546.88
01/18/2022	Paydown	43813KAC6	465,000.00	Honda Auto Receivables Trust 2020-3 A3 0.37% Due 10/18/2024	0.00	143.38	143.38
01/19/2022	Interest	3135G0T94	625,000.00	FNMA Note 2.375% Due 1/19/2023	0.00	7,421.88	7,421.88
01/20/2022	Paydown	92348AAA3	370,000.00	Verizon Owner Trust 2019-C A1A 1.94% Due 4/22/2024	10,310.62	498.94	10,809.56
01/20/2022	Paydown	92290BAA9	650,000.00	Verizon Owner Trust 2020-B A 0.47% Due 2/20/2025	14,683.15	220.13	14,903.28
01/21/2022	Interest	3137EAEU9	1,800,000.00	FHLMC Note 0.375% Due 7/21/2025	0.00	3,375.01	3,375.01
01/21/2022	Interest	90331HPL1	955,000.00	US Bank NA Callable Note Cont 12/21/2024 2.05% Due 1/21/2025	0.00	9,788.75	9,788.75

Cash Flow Report

As of June 30, 2021

Payment Date	Transaction Type	CUSIP	Quantity	Security Description	Principal Amount	Income	Total Amount
01/21/2022	Paydown	43813GAC5	230,000.00	Honda Auto Receivables Trust 2021-1 A3 0.27% Due 4/21/2025	0.00	51.75	51.75
01/21/2022	Paydown	43815HAC1	82,187.16	Honda Auto Receivables Trust 2018-3 A3 2.95% Due 8/22/2022	5,465.40	122.12	5,587.52
01/25/2022	Interest	808513AT2	750,000.00	Charles Schwab Corp Callable Note Cont 12/25/2022 2.65% Due 1/25/2023	0.00	9,937.50	9,937.50
01/28/2022	Interest	69353RFE3	890,000.00	PNC Bank Callable Note Cont 6/28/2022 2.45% Due 7/28/2022	0.00	10,902.50	10,902.50
JAN 2022					**1,435,000.36**	**80,540.33**	**1,515,540.69**
02/09/2022	Interest	69371RP59	760,000.00	Paccar Financial Corp Note 3.4% Due 8/9/2023	0.00	12,920.00	12,920.00
02/11/2022	Interest	06406RAJ6	250,000.00	Bank of NY Mellon Corp Note 3.45% Due 8/11/2023	0.00	4,312.50	4,312.50
02/12/2022	Interest	3137EAEP0	1,920,000.00	FHLMC Note 1.5% Due 2/12/2025	0.00	14,400.00	14,400.00
02/15/2022	Interest	69371RQ25	195,000.00	Paccar Financial Corp Note 2.15% Due 8/15/2024	0.00	2,096.25	2,096.25
02/15/2022	Interest	912828B66	1,500,000.00	US Treasury Note 2.75% Due 2/15/2024	0.00	20,625.00	20,625.00
02/15/2022	Interest	912828D56	1,500,000.00	US Treasury Note 2.375% Due 8/15/2024	0.00	17,812.50	17,812.50
02/15/2022	Paydown	65479JAD5	980,000.00	Nissan Auto Receivables Owner 2019-C A3 1.93% Due 7/15/2024	25,832.27	1,287.94	27,120.21
02/15/2022	Paydown	44891RAC4	470,000.00	Hyundai Auto Receivables Trust 2020-C A3 0.38% Due 5/15/2025	0.00	148.83	148.83
02/15/2022	Paydown	47789JAD8	314,539.91	John Deere Owner Trust 2019-A A3 2.91% Due 7/17/2023	22,492.69	384.53	22,877.22
02/15/2022	Paydown	58769EAC2	280,000.00	Mercedes-Benz Auto Lease Trust 2020-B A3 0.4% Due 11/15/2023	24,495.80	93.33	24,589.13
02/15/2022	Paydown	89238TAD5	109,384.72	Toyota Auto Receivables Trust 2018-B A3 2.96% Due 9/15/2022	7,290.73	146.33	7,437.06
02/15/2022	Paydown	477870AC3	196,677.83	John Deere Owner Trust 2019-B A3 2.21% Due 12/15/2023	6,453.34	279.71	6,733.05

City of Brea

Account #120

Cash Flow Report

As of June 30, 2021

Payment Date	Transaction Type	CUSIP	Quantity	Security Description	Principal Amount	Income	Total Amount
02/15/2022	Paydown	47787NAC3	215,000.00	John Deere Owner Trust 2020-B A3 0.51% Due 11/15/2024	0.00	91.38	91.38
02/15/2022	Paydown	89240BAC2	810,000.00	Toyota Auto Receivables Owners 2021-A A3 0.26% Due 5/15/2025	0.00	175.50	175.50
02/15/2022	Paydown	43815NAC8	509,704.46	Honda Auto Receivables Trust 2019-3 A3 1.78% Due 8/15/2023	34,014.36	340.48	34,354.84
02/15/2022	Paydown	44933LAC7	400,000.00	Hyundai Auto Receivables Trust 2021-A A3 0.38% Due 9/15/2025	0.00	126.67	126.67
02/15/2022	Paydown	89236XAC0	370,000.00	Toyota Auto Receivables 2020-D A3 0.35% Due 1/15/2025	9,004.95	89.33	9,094.28
02/15/2022	Paydown	43813DAC2	280,000.00	Honda Auto Receivables 2020-2 A3 0.82% Due 7/15/2024	7,510.71	155.51	7,666.22
02/15/2022	Paydown	47788EAC2	66,633.54	John Deere Owner Trust 2018-B A3 3.08% Due 11/15/2022	3,899.68	102.30	4,001.98
02/15/2022	Paydown	47789KAC7	460,000.00	John Deere Owner Trust 2020-A A3 1.1% Due 8/15/2024	11,723.62	347.26	12,070.88
02/18/2022	Paydown	43813KAC6	465,000.00	Honda Auto Receivables Trust 2020-3 A3 0.37% Due 10/18/2024	0.00	143.38	143.38
02/20/2022	Paydown	92290BAA9	650,000.00	Verizon Owner Trust 2020-B A 0.47% Due 2/20/2025	14,688.91	214.37	14,903.28
02/20/2022	Paydown	92348AAA3	370,000.00	Verizon Owner Trust 2019-C A1A 1.94% Due 4/22/2024	10,333.82	482.27	10,816.09
02/21/2022	Paydown	43813GAC5	230,000.00	Honda Auto Receivables Trust 2021-1 A3 0.27% Due 4/21/2025	0.00	51.75	51.75
02/21/2022	Paydown	43815HAC1	82,187.16	Honda Auto Receivables Trust 2018-3 A3 2.95% Due 8/22/2022	5,478.84	108.68	5,587.52
02/24/2022	Interest	3137EAEV7	1,025,000.00	FHLMC Note 0.25% Due 8/24/2023	0.00	1,281.25	1,281.25
02/25/2022	Interest	3135G05X7	1,800,000.00	FNMA Note 0.375% Due 8/25/2025	0.00	3,375.00	3,375.00
02/28/2022	Interest	912828L24	1,000,000.00	US Treasury Note 1.875% Due 8/31/2022	0.00	9,375.00	9,375.00
02/28/2022	Interest	912828ZC7	2,000,000.00	US Treasury Note 1.125% Due 2/28/2025	0.00	11,250.00	11,250.00

Cash Flow Report

As of June 30, 2021

Payment Date	Transaction Type	CUSIP	Quantity	Security Description	Principal Amount	Income	Total Amount
02/28/2022	Maturity	912828J43	1,360,000.00	US Treasury Note 1.75% Due 2/28/2022	1,360,000.00	11,900.00	1,371,900.00
FEB 2022					**1,543,219.72**	**114,117.05**	**1,657,336.77**
03/05/2022	Interest	06051GHF9	1,100,000.00	Bank of America Corp Callable Note 1X 3/5/2023 3.55% Due 3/5/2024	0.00	19,525.00	19,525.00
03/06/2022	Interest	24422ETG4	650,000.00	John Deere Capital Corp Note 2.8% Due 3/6/2023	0.00	9,100.00	9,100.00
03/08/2022	Interest	3130AB3H7	1,500,000.00	FHLB Note 2.375% Due 3/8/2024	0.00	17,812.50	17,812.50
03/08/2022	Interest	313383YJ4	1,200,000.00	FHLB Note 3.375% Due 9/8/2023	0.00	20,250.00	20,250.00
03/11/2022	Interest	89114QCB2	1,100,000.00	Toronto Dominion Bank Note 3.25% Due 3/11/2024	0.00	17,875.00	17,875.00
03/12/2022	Interest	3135G0U43	1,500,000.00	FNMA Note 2.875% Due 9/12/2023	0.00	21,562.50	21,562.50
03/13/2022	Interest	3130A2UW4	1,200,000.00	FHLB Note 2.875% Due 9/13/2024	0.00	17,250.00	17,250.00
03/14/2022	Interest	4581X0CZ9	800,000.00	Inter-American Dev Bank Note 1.75% Due 9/14/2022	0.00	7,000.00	7,000.00
03/15/2022	Interest	91282CBR1	950,000.00	US Treasury Note 0.25% Due 3/15/2024	0.00	1,187.50	1,187.50
03/15/2022	Paydown	44891RAC4	470,000.00	Hyundai Auto Receivables Trust 2020-C A3 0.38% Due 5/15/2025	0.00	148.83	148.83
03/15/2022	Paydown	44933LAC7	400,000.00	Hyundai Auto Receivables Trust 2021-A A3 0.38% Due 9/15/2025	0.00	126.67	126.67
03/15/2022	Paydown	47787NAC3	215,000.00	John Deere Owner Trust 2020-B A3 0.51% Due 11/15/2024	9,307.61	91.38	9,398.99
03/15/2022	Paydown	43815NAC8	509,704.46	Honda Auto Receivables Trust 2019-3 A3 1.78% Due 8/15/2023	32,501.07	290.03	32,791.10
03/15/2022	Paydown	47789JAD8	314,539.91	John Deere Owner Trust 2019-A A3 2.91% Due 7/17/2023	22,545.92	329.99	22,875.91
03/15/2022	Paydown	58769EAC2	280,000.00	Mercedes-Benz Auto Lease Trust 2020-B A3 0.4% Due 11/15/2023	24,284.79	85.17	24,369.96

City of Brea

Account #120

Cash Flow Report

As of June 30, 2021

Payment Date	Transaction Type	CUSIP	Quantity	Security Description	Principal Amount	Income	Total Amount
03/15/2022	Paydown	65479JAD5	980,000.00	Nissan Auto Receivables Owner 2019-C A3 1.93% Due 7/15/2024	25,890.40	1,246.39	27,136.79
03/15/2022	Paydown	89238TAD5	109,384.72	Toyota Auto Receivables Trust 2018-B A3 2.96% Due 9/15/2022	7,325.98	128.34	7,454.32
03/15/2022	Paydown	47788EAC2	66,633.54	John Deere Owner Trust 2018-B A3 3.08% Due 11/15/2022	3,918.52	92.29	4,010.81
03/15/2022	Paydown	43813DAC2	280,000.00	Honda Auto Receivables 2020-2 A3 0.82% Due 7/15/2024	7,515.85	150.37	7,666.22
03/15/2022	Paydown	477870AC3	196,677.83	John Deere Owner Trust 2019-B A3 2.21% Due 12/15/2023	6,466.79	267.82	6,734.61
03/15/2022	Paydown	47789KAC7	460,000.00	John Deere Owner Trust 2020-A A3 1.1% Due 8/15/2024	11,755.86	336.51	12,092.37
03/15/2022	Paydown	89236XAC0	370,000.00	Toyota Auto Receivables 2020-D A3 0.35% Due 1/15/2025	8,979.83	86.71	9,066.54
03/15/2022	Paydown	89240BAC2	810,000.00	Toyota Auto Receivables Owners 2021-A A3 0.26% Due 5/15/2025	0.00	175.50	175.50
03/18/2022	Interest	808513BN4	530,000.00	Charles Schwab Corp Callable Note Cont 2/18/2024 0.75% Due 3/18/2024	0.00	1,987.50	1,987.50
03/18/2022	Paydown	43813KAC6	465,000.00	Honda Auto Receivables Trust 2020-3 A3 0.37% Due 10/18/2024	22,074.66	143.38	22,218.04
03/20/2022	Paydown	92348AAA3	370,000.00	Verizon Owner Trust 2019-C A1A 1.94% Due 4/22/2024	10,357.08	465.56	10,822.64
03/20/2022	Paydown	92290BAA9	650,000.00	Verizon Owner Trust 2020-B A 0.47% Due 2/20/2025	14,694.66	208.62	14,903.28
03/21/2022	Paydown	43813GAC5	230,000.00	Honda Auto Receivables Trust 2021-1 A3 0.27% Due 4/21/2025	0.00	51.75	51.75
03/21/2022	Paydown	43815HAC1	82,187.16	Honda Auto Receivables Trust 2018-3 A3 2.95% Due 8/22/2022	5,492.31	95.21	5,587.52
03/23/2022	Interest	3137EAEX3	1,805,000.00	FHLMC Note 0.375% Due 9/23/2025	0.00	3,384.38	3,384.38
03/31/2022	Interest	91282CAM3	1,900,000.00	US Treasury Note 0.25% Due 9/30/2025	0.00	2,375.00	2,375.00
03/31/2022	Interest	912828L57	1,240,000.00	US Treasury Note 1.75% Due 9/30/2022	0.00	10,850.00	10,850.00

Cash Flow Report

As of June 30, 2021

Payment Date	Transaction Type	CUSIP	Quantity	Security Description	Principal Amount	Income	Total Amount
MAR 2022					**213,111.33**	**154,679.90**	**367,791.23**
04/01/2022	Interest	13063DRK6	900,000.00	California State Taxable GO 2.4% Due 10/1/2024	0.00	10,800.00	10,800.00
04/06/2022	Interest	89236TJD8	275,000.00	Toyota Motor Credit Corp Note 0.4% Due 4/6/2023	0.00	550.00	550.00
04/10/2022	Interest	02665WCQ2	750,000.00	American Honda Finance Note 3.625% Due 10/10/2023	0.00	13,593.75	13,593.75
04/15/2022	Interest	3135G0W66	1,755,000.00	FNMA Note 1.625% Due 10/15/2024	0.00	14,259.38	14,259.38
04/15/2022	Paydown	43815NAC8	509,704.46	Honda Auto Receivables Trust 2019-3 A3 1.78% Due 8/15/2023	30,984.12	241.82	31,225.94
04/15/2022	Paydown	44933LAC7	400,000.00	Hyundai Auto Receivables Trust 2021-A A3 0.38% Due 9/15/2025	0.00	126.67	126.67
04/15/2022	Paydown	47787NAC3	215,000.00	John Deere Owner Trust 2020-B A3 0.51% Due 11/15/2024	9,311.26	87.42	9,398.68
04/15/2022	Paydown	65479JAD5	980,000.00	Nissan Auto Receivables Owner 2019-C A3 1.93% Due 7/15/2024	25,948.64	1,204.76	27,153.40
04/15/2022	Paydown	89240BAC2	810,000.00	Toyota Auto Receivables Owners 2021-A A3 0.26% Due 5/15/2025	0.00	175.50	175.50
04/15/2022	Paydown	47789JAD8	314,539.91	John Deere Owner Trust 2019-A A3 2.91% Due 7/17/2023	22,599.27	275.32	22,874.59
04/15/2022	Paydown	58769EAC2	280,000.00	Mercedes-Benz Auto Lease Trust 2020-B A3 0.4% Due 11/15/2023	24,073.69	77.07	24,150.76
04/15/2022	Paydown	89238TAD5	109,384.72	Toyota Auto Receivables Trust 2018-B A3 2.96% Due 9/15/2022	7,361.38	110.27	7,471.65
04/15/2022	Paydown	477870AC3	196,677.83	John Deere Owner Trust 2019-B A3 2.21% Due 12/15/2023	6,480.26	255.92	6,736.18
04/15/2022	Paydown	47789KAC7	460,000.00	John Deere Owner Trust 2020-A A3 1.1% Due 8/15/2024	11,788.18	325.74	12,113.92
04/15/2022	Paydown	89236XAC0	370,000.00	Toyota Auto Receivables 2020-D A3 0.35% Due 1/15/2025	8,954.46	84.09	9,038.55
04/15/2022	Paydown	43813DAC2	280,000.00	Honda Auto Receivables 2020-2 A3 0.82% Due 7/15/2024	7,520.98	145.24	7,666.22

City of Brea

Account #120

Cash Flow Report

As of June 30, 2021

Payment Date	Transaction Type	CUSIP	Quantity	Security Description	Principal Amount	Income	Total Amount
04/15/2022	Paydown	44891RAC4	470,000.00	Hyundai Auto Receivables Trust 2020-C A3 0.38% Due 5/15/2025	0.00	148.83	148.83
04/15/2022	Paydown	47788EAC2	66,633.54	John Deere Owner Trust 2018-B A3 3.08% Due 11/15/2022	3,937.47	82.23	4,019.70
04/18/2022	Paydown	43813KAC6	465,000.00	Honda Auto Receivables Trust 2020-3 A3 0.37% Due 10/18/2024	22,081.47	136.57	22,218.04
04/20/2022	Interest	4581X0DV7	1,915,000.00	Inter-American Dev Bank Note 0.875% Due 4/20/2026	0.00	8,378.13	8,378.13
04/20/2022	Paydown	92290BAA9	650,000.00	Verizon Owner Trust 2020-B A 0.47% Due 2/20/2025	14,700.41	202.87	14,903.28
04/20/2022	Paydown	92348AAA3	370,000.00	Verizon Owner Trust 2019-C A1A 1.94% Due 4/22/2024	10,380.38	448.82	10,829.20
04/21/2022	Paydown	43813GAC5	230,000.00	Honda Auto Receivables Trust 2021-1 A3 0.27% Due 4/21/2025	0.00	51.75	51.75
04/21/2022	Paydown	43815HAC1	82,187.16	Honda Auto Receivables Trust 2018-3 A3 2.95% Due 8/22/2022	5,505.81	81.71	5,587.52
04/22/2022	Interest	3135G03U5	1,510,000.00	FNMA Note 0.625% Due 4/22/2025	0.00	4,718.75	4,718.75
04/22/2022	Interest	46647PBK1	312,000.00	JP Morgan Chase & Co Callable Note Cont 4/22/2025 2.083% Due 4/22/2026	0.00	3,249.48	3,249.48
04/28/2022	Interest	06406RAG2	800,000.00	Bank of NY Mellon Corp Note 3.5% Due 4/28/2023	0.00	14,000.00	14,000.00
04/28/2022	Interest	459058JL8	945,000.00	Intl. Bank Recon & Development Note 0.5% Due 10/28/2025	0.00	2,362.50	2,362.50
04/30/2022	Interest	9128283D0	1,500,000.00	US Treasury Note 2.25% Due 10/31/2024	0.00	16,875.00	16,875.00
04/30/2022	Interest	912828T91	1,500,000.00	US Treasury Note 1.625% Due 10/31/2023	0.00	12,187.50	12,187.50
04/30/2022	Interest	912828X70	1,000,000.00	US Treasury Note 2% Due 4/30/2024	0.00	10,000.00	10,000.00
04/30/2022	Interest	91282CAT8	1,900,000.00	US Treasury Note 0.25% Due 10/31/2025	0.00	2,375.00	2,375.00
APR 2022					**211,627.78**	**117,612.09**	**329,239.87**

City of Brea

Account #120

Cash Flow Report

As of June 30, 2021

Payment Date	Transaction Type	CUSIP	Quantity	Security Description	Principal Amount	Income	Total Amount
05/01/2022	Interest	78015K7C2	1,100,000.00	Royal Bank of Canada Note 2.25% Due 11/1/2024	0.00	12,375.00	12,375.00
05/03/2022	Interest	037833AK6	900,000.00	Apple Inc Note 2.4% Due 5/3/2023	0.00	10,800.00	10,800.00
05/05/2022	Interest	3137EAER6	1,660,000.00	FHLMC Note 0.375% Due 5/5/2023	0.00	3,112.50	3,112.50
05/07/2022	Interest	3135G06G3	1,825,000.00	FNMA Note 0.5% Due 11/7/2025	0.00	4,562.50	4,562.50
05/08/2022	Interest	14913Q3B3	1,100,000.00	Caterpillar Finl Service Note 2.15% Due 11/8/2024	0.00	11,825.00	11,825.00
05/12/2022	Interest	023135BX3	1,455,000.00	Amazon.com Inc Callable Note Cont 4/12/2026 1% Due 5/12/2026	0.00	7,275.00	7,275.00
05/15/2022	Interest	91324PEC2	240,000.00	United Health Group Inc Callable Note Cont 4/15/2026 1.15% Due 5/15/2026	0.00	1,380.00	1,380.00
05/15/2022	Paydown	43813DAC2	280,000.00	Honda Auto Receivables 2020-2 A3 0.82% Due 7/15/2024	7,526.12	140.10	7,666.22
05/15/2022	Paydown	43815NAC8	509,704.46	Honda Auto Receivables Trust 2019-3 A3 1.78% Due 8/15/2023	29,463.52	195.86	29,659.38
05/15/2022	Paydown	47787NAC3	215,000.00	John Deere Owner Trust 2020-B A3 0.51% Due 11/15/2024	9,314.91	83.46	9,398.37
05/15/2022	Paydown	47789KAC7	460,000.00	John Deere Owner Trust 2020-A A3 1.1% Due 8/15/2024	11,820.60	314.93	12,135.53
05/15/2022	Paydown	65479JAD5	980,000.00	Nissan Auto Receivables Owner 2019-C A3 1.93% Due 7/15/2024	26,007.03	1,163.02	27,170.05
05/15/2022	Paydown	89236XAC0	370,000.00	Toyota Auto Receivables 2020-D A3 0.35% Due 1/15/2025	8,928.80	81.48	9,010.28
05/15/2022	Paydown	89240BAC2	810,000.00	Toyota Auto Receivables Owners 2021-A A3 0.26% Due 5/15/2025	0.00	175.50	175.50
05/15/2022	Paydown	44891RAC4	470,000.00	Hyundai Auto Receivables Trust 2020-C A3 0.38% Due 5/15/2025	0.00	148.83	148.83
05/15/2022	Paydown	44933LAC7	400,000.00	Hyundai Auto Receivables Trust 2021-A A3 0.38% Due 9/15/2025	0.00	126.67	126.67

Cash Flow Report

As of June 30, 2021

Payment Date	Transaction Type	CUSIP	Quantity	Security Description	Principal Amount	Income	Total Amount
05/15/2022	Paydown	47788EAC2	66,633.54	John Deere Owner Trust 2018-B A3 3.08% Due 11/15/2022	3,956.50	72.12	4,028.62
05/15/2022	Paydown	477870AC3	196,677.83	John Deere Owner Trust 2019-B A3 2.21% Due 12/15/2023	6,493.76	243.98	6,737.74
05/15/2022	Paydown	47789JAD8	314,539.91	John Deere Owner Trust 2019-A A3 2.91% Due 7/17/2023	22,652.76	220.51	22,873.27
05/15/2022	Paydown	58769EAC2	280,000.00	Mercedes-Benz Auto Lease Trust 2020-B A3 0.4% Due 11/15/2023	23,862.47	69.05	23,931.52
05/15/2022	Paydown	89238TAD5	109,384.72	Toyota Auto Receivables Trust 2018-B A3 2.96% Due 9/15/2022	7,396.96	92.12	7,489.08
05/18/2022	Interest	404280BS7	1,100,000.00	HSBC Holdings PLC Callable Note 1X 5/18/2023 3.95% Due 5/18/2024	0.00	21,725.00	21,725.00
05/18/2022	Paydown	43813KAC6	465,000.00	Honda Auto Receivables Trust 2020-3 A3 0.37% Due 10/18/2024	22,088.28	129.76	22,218.04
05/20/2022	Paydown	92348AAA3	370,000.00	Verizon Owner Trust 2019-C A1A 1.94% Due 4/22/2024	10,403.73	432.04	10,835.77
05/20/2022	Paydown	92290BAA9	650,000.00	Verizon Owner Trust 2020-B A 0.47% Due 2/20/2025	14,706.17	197.11	14,903.28
05/21/2022	Paydown	43813GAC5	230,000.00	Honda Auto Receivables Trust 2021-1 A3 0.27% Due 4/21/2025	0.00	51.75	51.75
05/21/2022	Paydown	43815HAC1	82,187.16	Honda Auto Receivables Trust 2018-3 A3 2.95% Due 8/22/2022	5,519.34	68.18	5,587.52
05/27/2022	Interest	3135G06H1	1,610,000.00	FNMA Note 0.25% Due 11/27/2023	0.00	2,012.50	2,012.50
05/31/2022	Interest	91282CAZ4	1,350,000.00	US Treasury Note 0.375% Due 11/30/2025	0.00	2,531.25	2,531.25
MAY 2022					**210,140.95**	**81,605.22**	**291,746.17**
06/01/2022	Interest	46647PCH7	985,000.00	JP Morgan Chase & Co Callable Note Cont 6/1/2024 0.824% Due 6/1/2025	0.00	4,058.20	4,058.20
06/08/2022	Interest	3130A0F70	1,075,000.00	FHLB Note 3.375% Due 12/8/2023	0.00	18,140.63	18,140.63
06/09/2022	Interest	3130A3KM5	775,000.00	FHLB Note 2.5% Due 12/9/2022	0.00	9,687.50	9,687.50

City of Brea

Account #120

Cash Flow Report

As of June 30, 2021

Payment Date	Transaction Type	CUSIP	Quantity	Security Description	Principal Amount	Income	Total Amount
06/14/2022	Interest	3130A1XJ2	1,500,000.00	FHLB Note 2.875% Due 6/14/2024	0.00	21,562.51	21,562.51
06/15/2022	Paydown	477870AC3	196,677.83	John Deere Owner Trust 2019-B A3 2.21% Due 12/15/2023	6,507.29	232.02	6,739.31
06/15/2022	Paydown	47787NAC3	215,000.00	John Deere Owner Trust 2020-B A3 0.51% Due 11/15/2024	9,318.56	79.50	9,398.06
06/15/2022	Paydown	89240BAC2	810,000.00	Toyota Auto Receivables Owners 2021-A A3 0.26% Due 5/15/2025	36,692.70	175.50	36,868.20
06/15/2022	Paydown	43813DAC2	280,000.00	Honda Auto Receivables 2020-2 A3 0.82% Due 7/15/2024	7,531.27	134.95	7,666.22
06/15/2022	Paydown	47788EAC2	66,633.54	John Deere Owner Trust 2018-B A3 3.08% Due 11/15/2022	3,975.62	61.97	4,037.59
06/15/2022	Paydown	47789KAC7	460,000.00	John Deere Owner Trust 2020-A A3 1.1% Due 8/15/2024	11,853.11	304.10	12,157.21
06/15/2022	Paydown	89236XAC0	370,000.00	Toyota Auto Receivables 2020-D A3 0.35% Due 1/15/2025	8,902.88	78.87	8,981.75
06/15/2022	Paydown	43815NAC8	509,704.46	Honda Auto Receivables Trust 2019-3 A3 1.78% Due 8/15/2023	27,939.24	152.15	28,091.39
06/15/2022	Paydown	44933LAC7	400,000.00	Hyundai Auto Receivables Trust 2021-A A3 0.38% Due 9/15/2025	0.00	126.67	126.67
06/15/2022	Paydown	65479JAD5	980,000.00	Nissan Auto Receivables Owner 2019-C A3 1.93% Due 7/15/2024	26,065.55	1,121.19	27,186.74
06/15/2022	Paydown	44891RAC4	470,000.00	Hyundai Auto Receivables Trust 2020-C A3 0.38% Due 5/15/2025	22,299.00	148.83	22,447.83
06/15/2022	Paydown	47789JAD8	314,539.91	John Deere Owner Trust 2019-A A3 2.91% Due 7/17/2023	22,706.37	165.58	22,871.95
06/15/2022	Paydown	58769EAC2	280,000.00	Mercedes-Benz Auto Lease Trust 2020-B A3 0.4% Due 11/15/2023	23,651.16	61.09	23,712.25
06/15/2022	Paydown	89238TAD5	109,384.72	Toyota Auto Receivables Trust 2018-B A3 2.96% Due 9/15/2022	7,432.71	73.87	7,506.58
06/17/2022	Interest	3135G04Z3	1,800,000.00	FNMA Note 0.5% Due 6/17/2025	0.00	4,500.00	4,500.00
06/18/2022	Interest	89236TJK2	995,000.00	Toyota Motor Credit Corp Note 1.125% Due 6/18/2026	0.00	5,596.88	5,596.88

City of Brea

Account #120

Cash Flow Report

As of June 30, 2021

Payment Date	Transaction Type	CUSIP	Quantity	Security Description	Principal Amount	Income	Total Amount
06/18/2022	Paydown	43813KAC6	465,000.00	Honda Auto Receivables Trust 2020-3 A3 0.37% Due 10/18/2024	22,095.09	122.95	22,218.04
06/19/2022	Interest	06051GJD2	475,000.00	Bank of America Corp Callable Note Cont 6/19/2025 1.319% Due 6/19/2026	0.00	3,132.63	3,132.63
06/19/2022	Interest	3137EAEN5	1,200,000.00	FHLMC Note 2.75% Due 6/19/2023	0.00	16,500.00	16,500.00
06/20/2022	Paydown	92348AAA3	370,000.00	Verizon Owner Trust 2019-C A1A 1.94% Due 4/22/2024	10,427.14	415.22	10,842.36
06/20/2022	Paydown	92290BAA9	650,000.00	Verizon Owner Trust 2020-B A 0.47% Due 2/20/2025	14,711.93	191.35	14,903.28
06/21/2022	Paydown	43813GAC5	230,000.00	Honda Auto Receivables Trust 2021-1 A3 0.27% Due 4/21/2025	0.00	51.75	51.75
06/21/2022	Paydown	43815HAC1	82,187.16	Honda Auto Receivables Trust 2018-3 A3 2.95% Due 8/22/2022	5,532.91	54.61	5,587.52
06/23/2022	Interest	46647PCK0	470,000.00	JP Morgan Chase & Co Callable Note Cont 6/23/2024 0.969% Due 6/23/2025	0.00	2,277.16	2,277.16
06/26/2022	Interest	931142EK5	904,000.00	Wal-Mart Stores Callable Note Cont 5/26/2023 3.4% Due 6/26/2023	0.00	15,368.00	15,368.00
06/30/2022	Interest	912828N30	1,150,000.00	US Treasury Note 2.125% Due 12/31/2022	0.00	12,218.75	12,218.75
06/30/2022	Interest	912828XX3	1,450,000.00	US Treasury Note 2% Due 6/30/2024	0.00	14,500.00	14,500.00
06/30/2022	Interest	912828V23	1,250,000.00	US Treasury Note 2.25% Due 12/31/2023	0.00	14,062.50	14,062.50
06/30/2022	Maturity	912828XG0	1,100,000.00	US Treasury Note 2.125% Due 6/30/2022	1,100,000.00	11,687.50	1,111,687.50
JUN 2022					**1,367,642.53**	**157,044.43**	**1,524,686.96**
TOTAL					**9,192,372.59**	**1,452,650.34**	**10,645,022.93**

City of Brea

Account #120

Book Value Report

As of June 30, 2021

MIG	Book Value	12 Months or Less	13 to 24 Months	25 to 60 Months	Total Holdings
ABS	$7,266,795.18	$1,087,236.15	$5,779,598.69	$399,960.34	$7,266,795.18
Agency	$33,510,900.93	$2,435,259.86	$4,250,552.04	$26,825,089.03	$33,510,900.93
Corporate	$20,581,534.06	$1,479,968.21	$6,527,140.48	$12,574,425.37	$20,581,534.06
Money Market Fund	$615,711.15	$615,711.15	$0.00	$0.00	$615,711.15
Municipal Bonds	$913,613.93	$0.00	$0.00	$913,613.93	$913,613.93
Supranational	$4,919,097.30	$1,274,827.37	$794,128.68	$2,850,141.25	$4,919,097.30
US Treasury	$23,933,817.71	$2,659,944.61	$3,381,189.91	$17,892,683.19	$23,933,817.71
TOTAL	**$91,741,470.26**	**$9,552,947.35**	**$20,732,609.80**	**$61,455,913.11**	**$91,741,470.26**

Important Disclosures

Chandler Asset Management, Inc. (“Chandler”) is an SEC registered investment adviser. For additional information about our firm, please see our current disclosures (Form ADV). To obtain a copy of our current disclosures, you may contact your client service representative by calling the number on the front of this statement or you may visit our website at www.chandlerasset.com.

Information contained in this monthly statement is confidential and is provided for informational purposes only and should not be construed as specific investment or legal advice. The information contained herein was obtained from sources believed to be reliable as of the date of this statement, but may become outdated or superseded at any time without notice.

Custody: Your qualified custodian bank maintains control of all assets reflected in this statement and we urge you to compare this statement to the one you receive from your qualified custodian. Chandler does not have any authority to withdraw or deposit funds from/to the custodian account.

Valuation: Prices are provided by IDC, an independent pricing source. In the event IDC does not provide a price or if the price provided is not reflective of fair market value, Chandler will obtain pricing from an alternative approved third party pricing source in accordance with our written valuation policy and procedures. Our valuation procedures are also disclosed in Item 5 of our Form ADV Part 2A.

Performance: Performance results are presented gross-of-advisory fees and represent the client’s Total Return. The deduction of advisory fees lowers performance results. These results include the reinvestment of dividends and other earnings. Past performance may not be indicative of future results. Therefore, clients should not assume that future performance of any specific investment or investment strategy will be profitable or equal to past performance levels. All investment strategies have the potential for profit or loss. Economic factors, market conditions or changes in investment strategies, contributions or withdrawals may materially alter the performance and results of your portfolio.

Source ice Data Indices, LLC ("ICE"), used with permission. ICE PERMITS USE OF THE ICE INDICES AND RELATED DATA ON AN "AS IS" BASIS; ICE, ITS AFFILIATES AND THEIR RESPECTIVE THIRD PARTY SUPPLIERS DISCLAIM ANY AND ALL WARRANTIES AND REPRESENTATIONS, EXPRESS AND/OR IMPLIED, INCLUDING ANY WARRANTIES OF MERCHANTABILITY OR FITNESS FOR A PARTICULAR PURPOSE OR USE, INCLUDING THE INDICES, INDEX DATA AND ANY DATA INCLUDED IN, RELATED TO, OR DERIVED THEREFROM. NEITHER ICE DATA, ITS AFFILIATES OR THEIR RESPECTIVE THIRD PARTY PROVIDERS GUARANTEE THE QUALITY, ADEQUACY, ACCURACY, TIMELINESS OR COMPLETENESS OF THE INDICES OR THE INDEX DATA OR ANY COMPONENT THEREOF, AND THE INDICES AND INDEX DATA AND ALL COMPONENTS THEREOF ARE PROVIDED ON AN "AS IS" BASIS AND LICENSEE'S USE IS AT LICENSEE'S OWN RISK. ICE DATA, ITS AFFILIATES AND THEIR RESPECTIVE THIRD PARTY DO NOT SPONSOR, ENDORSE, OR RECOMMEND CHANDLER, OR ANY OF ITS PRODUCTS OR SERVICES.

Index returns assume reinvestment of all distributions. Historical performance results for investment indexes generally do not reflect the deduction of transaction and/or custodial charges or the deduction of an investment management fee, the incurrence of which would have the effect of decreasing historical performance results. It is not possible to invest directly in an index.

Ratings: Ratings information have been provided by Moody’s, S&P and Fitch through data feeds we believe to be reliable as of the date of this statement, however we cannot guarantee its accuracy.

Security level ratings for U.S. Agency issued mortgage-backed securities (“MBS”) reflect the issuer rating because the securities themselves are not rated. The issuing U.S. Agency guarantees the full and timely payment of both principal and interest and carries a AA+/Aaa/AAA by S&P, Moody’s and Fitch respectively.

Benchmark Index & Disclosures

Benchmark Index	Disclosure
ICE BAML 1-5 Yr US Treasury/Agency Index*	The ICE BAML 1-5 Year US Treasury & Agency Index tracks the performance of US dollar denominated US Treasury and nonsubordinated US agency debt issued in the US domestic market. Qualifying securities must have an investment grade rating (based on an average of Moody's, S&P and Fitch). Qualifying securities must have at least one year remaining term to final maturity and less than five years remaining term to final maturity, at least 18 months to maturity at time of issuance, a fixed coupon schedule and a minimum amount outstanding of $1 billion for sovereigns and $250 million for agencies. (Index: GVA0. Please visit www.mlindex.ml.com for more information) The ICE BAML US 1-Year Treasury Bill Index is comprised of a single issue purchased at the beginning of the month and held for a full month. At the end of the month that issue is sold and rolled into a newly selected issue. The issue selected at each month-end rebalancing is the outstanding Treasury Bill that matures closest to, but not beyond, three months from the rebalancing date. (Index: G0O3. Please visit www.mlindex.ml.com for more information)
ICE BAML 1-5 Yr US Issuers Corp/Govt Rtd AAA-A Idx	The ICE BAML US Issuers 1-5 Year AAA-A US Corporate & Government Index tracks the performance of US dollar denominated investment grade debt publicly issued in the US domestic market, including US Treasury, US agency, foreign government, supranational and corporate securities. Qualifying securities must issued from US issuers and be rated AAA through A3 (based on an average of Moody's, S&P and Fitch). In addition, qualifying securities must have at least one year remaining term to final maturity and less than five years remaining term to final maturity, at least 18 months to final maturity at point of issuance, a fixed coupon schedule and a minimum amount outstanding of $1 billion for US Treasuries and $250 million for all other securities. (Index: GU10. Please visit www.mlindex.ml.com for more information)

Brea Lease Revenue Bonds, Reserve Account

Account #10129

Portfolio Summary

As of June 30, 2021

PORTFOLIO CHARACTERISTICS

Average Modified Duration	0.00
Average Coupon	0.01%
Average Purchase YTM	0.01%
Average Market YTM	0.01%
Average S&P/Moody Rating	AAA/Aaa
Average Final Maturity	0.00 yrs
Average Life	0.00 yrs

ACCOUNT SUMMARY

	Beg. Values as of 5/31/21	End Values as of 6/30/21
Market Value	261,973	262,772
Accrued Interest	724	0
Total Market Value	**262,697**	**262,772**
Income Earned	321	69
Cont/WD		0
Par	258,369	262,772
Book Value	257,888	262,772
Cost Value	258,203	262,772

TOP ISSUERS

Invesco Treasury Portfolio MMF	100.0%
Total	**100.0%**

SECTOR ALLOCATION

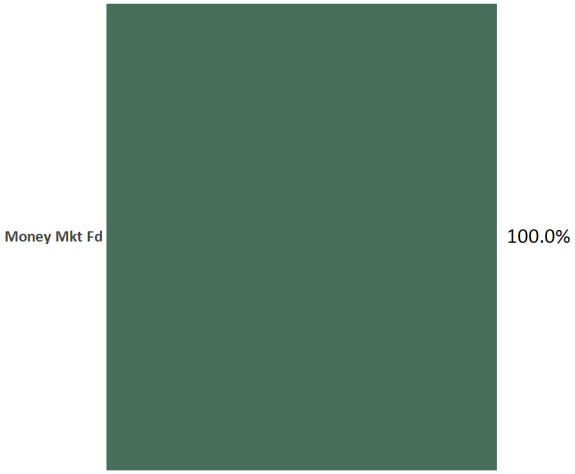

MATURITY DISTRIBUTION

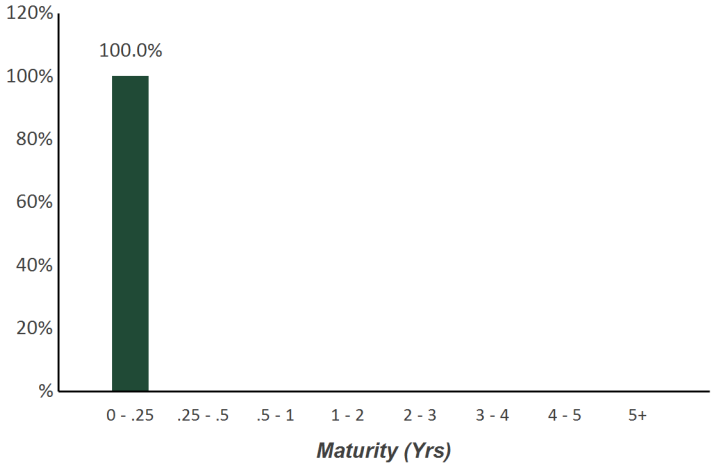

CREDIT QUALITY (S&P)

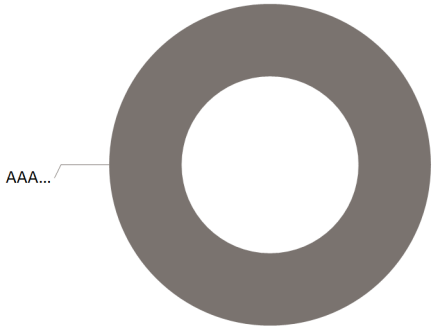

PERFORMANCE REVIEW

					Annualized				
TOTAL RATE OF RETURN	**1M**	**3M**	**YTD**	**1YR**	**2YRS**	**3YRS**	**5YRS**	**10YRS**	**5/31/2010**
Brea Lease Revenue Bonds, Reserve Account	0.03%	0.37%	-0.20%	-0.04%	2.12%	2.95%	1.46%	1.82%	2.07%
ICE BAML 3-Month US Treasury Bill Index	0.00%	0.00%	0.02%	0.09%	0.86%	1.34%	1.17%	0.63%	0.58%

Brea Lease Revenue Bonds, Reserve Account

Account #10129

Reconciliation Summary

As of June 30, 2021

BOOK VALUE RECONCILIATION		
BEGINNING BOOK VALUE		**$257,888.28**
Acquisition		
+ Security Purchases	$0.00	
+ Money Market Fund Purchases	$240,403.66	
+ Money Market Contributions	$0.00	
+ Security Contributions	$0.00	
+ Security Transfers	$0.00	
Total Acquisitions		**$240,403.66**
Dispositions		
- Security Sales	$239,612.16	
- Money Market Fund Sales	$0.00	
- MMF Withdrawals	$0.00	
- Security Withdrawals	$0.00	
- Security Transfers	$0.00	
- Other Dispositions	$0.00	
- Maturites	$0.00	
- Calls	$0.00	
- Principal Paydowns	$0.00	
Total Dispositions		**$239,612.16**
Amortization/Accretion		
+/- Net Accretion	$0.84	
		$0.84
Gain/Loss on Dispositions		
+/- Realized Gain/Loss	$4,091.71	
		$4,091.71
ENDING BOOK VALUE		**$262,772.33**

CASH TRANSACTION SUMMARY		
BEGINNING BALANCE		**$22,368.67**
Acquisition		
Contributions	$0.00	
Security Sale Proceeds	$239,612.16	
Accrued Interest Received	$791.50	
Interest Received	$0.00	
Dividend Received	$0.00	
Principal on Maturities	$0.00	
Interest on Maturities	$0.00	
Calls/Redemption (Principal)	$0.00	
Interest from Calls/Redemption	$0.00	
Principal Paydown	$0.00	
Total Acquisitions	**$240,403.66**	
Dispositions		
Withdrawals	$0.00	
Security Purchase	$0.00	
Accrued Interest Paid	$0.00	
Total Dispositions	**$0.00**	
ENDING BOOK VALUE		**$262,772.33**

Brea Lease Revenue Bonds, Reserve Account

Account #10129

Holdings Report

As of June 30, 2021

CUSIP	Security Description	Par Value/Units	Purchase Date Book Yield	Cost Value Book Value	Mkt Price Mkt YTM	Market Value Accrued Int.	% of Port. Gain/Loss	Moody/S&P Fitch	Maturity Duration
MONEY MARKET FUND									
825252109	Invesco Treasury MMFD Private Class	262,772.33	Various 0.01%	262,772.33 262,772.33	1.00 0.01%	262,772.33 0.00	100.00% 0.00	Aaa / AAA AAA	0.00 0.00
Total Money Market Fund		**262,772.33**	**0.01%**	**262,772.33** **262,772.33**	**0.01%**	**262,772.33** **0.00**	**100.00%** **0.00**	**Aaa / AAA** **AAA**	**0.00** **0.00**
TOTAL PORTFOLIO		**262,772.33**	**0.01%**	**262,772.33** **262,772.33**	**0.01%**	**262,772.33** **0.00**	**100.00%** **0.00**	**Aaa / AAA** **AAA**	**0.00** **0.00**
TOTAL MARKET VALUE PLUS ACCRUED						**262,772.33**			

Brea Lease Revenue Bonds, Reserve Account

Account #10129

Transaction Ledger

As of June 30, 2021

Transaction Type	Settlement Date	CUSIP	Quantity	Security Description	Price	Acq/Disp Yield	Amount	Interest Pur/Sold	Total Amount	Gain/Loss
ACQUISITIONS										
Purchase	06/08/2021	825252109	240,403.66	Invesco Treasury MMFD Private Class	1.000	0.01%	240,403.66	0.00	240,403.66	0.00
Subtotal			**240,403.66**				**240,403.66**	**0.00**	**240,403.66**	**0.00**
TOTAL ACQUISITIONS			**240,403.66**				**240,403.66**	**0.00**	**240,403.66**	**0.00**
DISPOSITIONS										
Sale	06/08/2021	9128284D9	22,000.00	US Treasury Note 2.5% Due 3/31/2023	104.285	0.13%	22,942.73	103.69	23,046.42	1,067.63
Sale	06/08/2021	912828F21	25,000.00	US Treasury Note 2.125% Due 9/30/2021	100.680	-0.06%	25,169.92	100.15	25,270.07	114.13
Sale	06/08/2021	912828J43	24,000.00	US Treasury Note 1.75% Due 2/28/2022	101.266	0.01%	24,303.75	114.13	24,417.88	317.92
Sale	06/08/2021	912828L24	23,000.00	US Treasury Note 1.875% Due 8/31/2022	102.199	0.08%	23,505.82	117.19	23,623.01	495.98
Sale	06/08/2021	912828N30	20,000.00	US Treasury Note 2.125% Due 12/31/2022	103.145	0.11%	20,628.91	186.67	20,815.58	683.93
Sale	06/08/2021	912828T91	20,000.00	US Treasury Note 1.625% Due 10/31/2023	103.398	0.20%	20,679.69	34.44	20,714.13	1,080.98
Sale	06/08/2021	912828WJ5	22,000.00	US Treasury Note 2.5% Due 5/15/2024	106.465	0.29%	23,422.27	35.87	23,458.14	1,017.68
Sale	06/08/2021	912828ZT0	16,000.00	US Treasury Note 0.25% Due 5/31/2025	98.785	0.56%	15,805.63	0.87	15,806.50	-154.38
Sale	06/08/2021	91282CBC4	40,000.00	US Treasury Note 0.375% Due 12/31/2025	98.547	0.70%	39,418.75	65.88	39,484.63	-576.97
Sale	06/08/2021	91282CBQ3	24,000.00	US Treasury Note 0.5% Due 2/28/2026	98.895	0.74%	23,734.69	32.61	23,767.30	44.81
Subtotal			**236,000.00**				**239,612.16**	**791.50**	**240,403.66**	**4,091.71**
TOTAL DISPOSITIONS			**236,000.00**				**239,612.16**	**791.50**	**240,403.66**	**4,091.71**

Brea Lease Revenue Bonds, Reserve Account

Account #10129

Income Earned

As of June 30, 2021

CUSIP	Security Description	Trade Date Settle Date Units	Book Value: Begin Book Value: Acq Book Value: Disp Book Value: End	Prior Accrued Inc. Received Ending Accrued Total Interest	Accr. Of Discount Amort. Of Premium Net Accret/Amort Income Earned	Total Income
FIXED INCOME						
9128284D9	US Treasury Note Due 03/31/2023	06/13/2018 06/14/2018 0.00	21,873.78 0.00 21,875.10 0.00	93.17 103.69 0.00 10.52	1.32 0.00 1.32 11.84	11.84
912828F21	US Treasury Note Due 09/30/2021	10/27/2016 10/28/2016 0.00	25,059.22 0.00 25,055.79 0.00	89.99 100.15 0.00 10.16	0.00 3.43 (3.43) 6.73	6.73
912828J43	US Treasury Note Due 02/28/2022	04/24/2017 04/26/2017 0.00	23,985.45 0.00 23,985.83 0.00	106.14 114.13 0.00 7.99	0.38 0.00 0.38 8.37	8.37
912828L24	US Treasury Note Due 08/31/2022	09/18/2017 09/19/2017 0.00	23,010.00 0.00 23,009.84 0.00	108.98 117.19 0.00 8.21	0.00 0.16 (0.16) 8.05	8.05
912828N30	US Treasury Note Due 12/31/2022	01/09/2018 01/10/2018 0.00	19,944.30 0.00 19,944.98 0.00	178.45 186.67 0.00 8.22	0.68 0.00 0.68 8.90	8.90
912828T91	US Treasury Note Due 10/31/2023	02/21/2019 02/22/2019 0.00	19,595.50 0.00 19,598.71 0.00	28.26 34.44 0.00 6.18	3.21 0.00 3.21 9.39	9.39
912828WJ5	US Treasury Note Due 05/15/2024	06/18/2019 06/19/2019 0.00	22,407.23 0.00 22,404.59 0.00	25.41 35.87 0.00 10.46	0.00 2.64 (2.64) 7.82	7.82
912828ZT0	US Treasury Note Due 05/31/2025	12/30/2020 12/31/2020 0.00	15,959.81 0.00 15,960.01 0.00	0.11 0.87 0.00 0.76	0.20 0.00 0.20 0.96	0.96
91282CBC4	US Treasury Note Due 12/31/2025	12/30/2020 12/31/2020 0.00	39,995.70 0.00 39,995.72 0.00	62.98 65.88 0.00 2.90	0.02 0.00 0.02 2.92	2.92

Brea Lease Revenue Bonds, Reserve Account

Account #10129

Income Earned

As of June 30, 2021

CUSIP	Security Description	Trade Date Settle Date Units	Book Value: Begin Book Value: Acq Book Value: Disp Book Value: End	Prior Accrued Inc. Received Ending Accrued Total Interest	Accr. Of Discount Amort. Of Premium Net Accret/Amort Income Earned	Total Income
91282CBQ3	US Treasury	03/04/2021	23,688.62	30.33	1.26	3.54
	Note	03/05/2021	0.00	32.61	0.00	
	Due 02/28/2026	0.00	23,689.88	0.00	1.26	
			0.00	2.28	3.54	
			235,519.61	**723.82**	**7.07**	
			0.00	**791.50**	**6.23**	
			235,520.45	**0.00**	**0.84**	
Total Fixed Income		**0.00**	**0.00**	**67.68**	**68.52**	**68.52**
CASH & EQUIVALENT						
825252109	Invesco	Various	22,368.67	0.00	0.00	0.00
	Treasury MMFD Private Class	Various	240,403.66	0.00	0.00	
		262,772.33	0.00	0.00	0.00	
			262,772.33	0.00	0.00	
			22,368.67	**0.00**	**0.00**	
			240,403.66	**0.00**	**0.00**	
			0.00	**0.00**	**0.00**	
Total Cash & Equivalent		**262,772.33**	**262,772.33**	**0.00**	**0.00**	**0.00**
			257,888.28	**723.82**	**7.07**	
			240,403.66	**791.50**	**6.23**	
			235,520.45	**0.00**	**0.84**	
TOTAL PORTFOLIO		**262,772.33**	**262,772.33**	**67.68**	**68.52**	**68.52**

Important Disclosures

Chandler Asset Management, Inc. (“Chandler”) is an SEC registered investment adviser. For additional information about our firm, please see our current disclosures (Form ADV). To obtain a copy of our current disclosures, you may contact your client service representative by calling the number on the front of this statement or you may visit our website at www.chandlerasset.com.

Information contained in this monthly statement is confidential and is provided for informational purposes only and should not be construed as specific investment or legal advice. The information contained herein was obtained from sources believed to be reliable as of the date of this statement, but may become outdated or superseded at any time without notice.

Custody: Your qualified custodian bank maintains control of all assets reflected in this statement and we urge you to compare this statement to the one you receive from your qualified custodian. Chandler does not have any authority to withdraw or deposit funds from/to the custodian account.

Valuation: Prices are provided by IDC, an independent pricing source. In the event IDC does not provide a price or if the price provided is not reflective of fair market value, Chandler will obtain pricing from an alternative approved third party pricing source in accordance with our written valuation policy and procedures. Our valuation procedures are also disclosed in Item 5 of our Form ADV Part 2A.

Performance: Performance results are presented gross-of-advisory fees and represent the client’s Total Return. The deduction of advisory fees lowers performance results. These results include the reinvestment of dividends and other earnings. Past performance may not be indicative of future results. Therefore, clients should not assume that future performance of any specific investment or investment strategy will be profitable or equal to past performance levels. All investment strategies have the potential for profit or loss. Economic factors, market conditions or changes in investment strategies, contributions or withdrawals may materially alter the performance and results of your portfolio.

Source ice Data Indices, LLC ("ICE"), used with permission. ICE PERMITS USE OF THE ICE INDICES AND RELATED DATA ON AN "AS IS" BASIS; ICE, ITS AFFILIATES AND THEIR RESPECTIVE THIRD PARTY SUPPLIERS DISCLAIM ANY AND ALL WARRANTIES AND REPRESENTATIONS, EXPRESS AND/OR IMPLIED, INCLUDING ANY WARRANTIES OF MERCHANTABILITY OR FITNESS FOR A PARTICULAR PURPOSE OR USE, INCLUDING THE INDICES, INDEX DATA AND ANY DATA INCLUDED IN, RELATED TO, OR DERIVED THEREFROM. NEITHER ICE DATA, ITS AFFILIATES OR THEIR RESPECTIVE THIRD PARTY PROVIDERS GUARANTEE THE QUALITY, ADEQUACY, ACCURACY, TIMELINESS OR COMPLETENESS OF THE INDICES OR THE INDEX DATA OR ANY COMPONENT THEREOF, AND THE INDICES AND INDEX DATA AND ALL COMPONENTS THEREOF ARE PROVIDED ON AN "AS IS" BASIS AND LICENSEE'S USE IS AT LICENSEE'S OWN RISK. ICE DATA, ITS AFFILIATES AND THEIR RESPECTIVE THIRD PARTY DO NOT SPONSOR, ENDORSE, OR RECOMMEND CHANDLER, OR ANY OF ITS PRODUCTS OR SERVICES.

Index returns assume reinvestment of all distributions. Historical performance results for investment indexes generally do not reflect the deduction of transaction and/or custodial charges or the deduction of an investment management fee, the incurrence of which would have the effect of decreasing historical performance results. It is not possible to invest directly in an index.

Ratings: Ratings information have been provided by Moody’s, S&P and Fitch through data feeds we believe to be reliable as of the date of this statement, however we cannot guarantee its accuracy.

Security level ratings for U.S. Agency issued mortgage-backed securities (“MBS”) reflect the issuer rating because the securities themselves are not rated. The issuing U.S. Agency guarantees the full and timely payment of both principal and interest and carries a AA+/Aaa/AAA by S&P, Moody’s and Fitch respectively.

Benchmark Index & Disclosures

Benchmark Index	Disclosure
ICE BAML 3-Month US Treasury Bill Index	The ICE BAML US 3-Month Treasury Bill Index is comprised of a single issue purchased at the beginning of the month and held for a full month. At the end of the month that issue is sold and rolled into a newly selected issue. The issue selected at each month-end rebalancing is the outstanding Treasury Bill that matures closest to, but not beyond, three months from the rebalancing date. (Index: G0O1. Please visit www.mlindex.ml.com for more information)

Brea CFD 2008 2 17 Reserve Fund

Account #10600

Portfolio Summary

As of June 30, 2021

PORTFOLIO CHARACTERISTICS

Average Modified Duration	1.84
Average Coupon	1.83%
Average Purchase YTM	2.19%
Average Market YTM	0.29%
Average S&P/Moody Rating	AA+/Aaa
Average Final Maturity	1.87 yrs
Average Life	1.87 yrs

ACCOUNT SUMMARY

	Beg. Values as of 5/31/21	End Values as of 6/30/21
Market Value	683,668	681,940
Accrued Interest	2,178	2,964
Total Market Value	**685,846**	**684,904**
Income Earned	1,229	1,187
Cont/WD		0
Par	668,919	669,134
Book Value	668,109	668,510
Cost Value	660,750	660,965

TOP ISSUERS

Government of United States	99.4%
Invesco Treasury Portfolio MMF	0.6%
Total	**100.0%**

SECTOR ALLOCATION

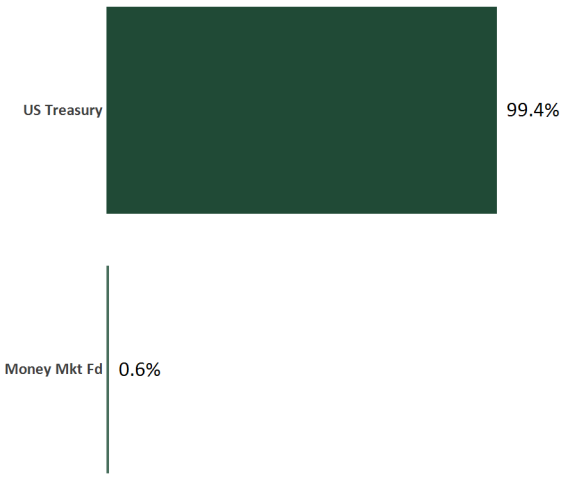

MATURITY DISTRIBUTION

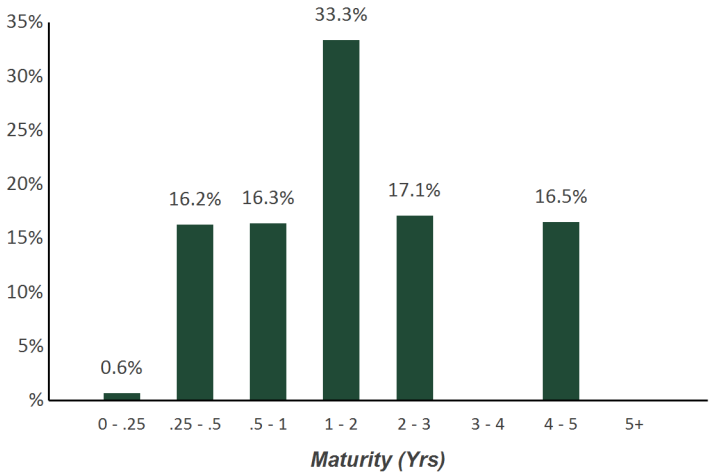

CREDIT QUALITY (S&P)

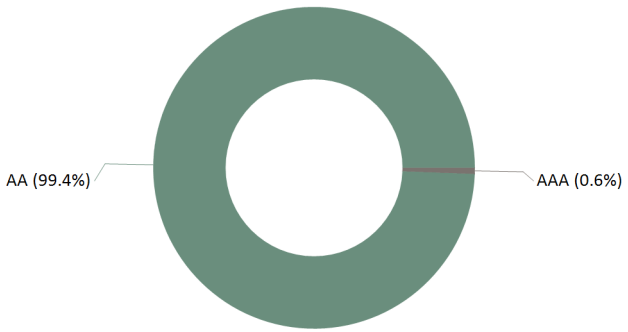

PERFORMANCE REVIEW

					Annualized				
TOTAL RATE OF RETURN	**1M**	**3M**	**YTD**	**1YR**	**2YRS**	**3YRS**	**5YRS**	**10YRS**	**6/30/2018**
Brea CFD 2008 2 17 Reserve Fund	-0.14%	0.11%	-0.36%	-0.19%	2.32%	3.16%	N/A	N/A	3.16%
ICE BAML 3-5 Yr US Treasury/Agency Index	-0.33%	0.34%	-0.92%	-0.78%	3.06%	4.14%	N/A	N/A	4.14%

Brea CFD 2008 2 17 Reserve Fund

Account #10600

Reconciliation Summary

As of June 30, 2021

BOOK VALUE RECONCILIATION		
BEGINNING BOOK VALUE		**$668,108.56**
Acquisition		
+ Security Purchases	$0.00	
+ Money Market Fund Purchases	$215.63	
+ Money Market Contributions	$0.00	
+ Security Contributions	$0.00	
+ Security Transfers	$0.00	
Total Acquisitions		**$215.63**
Dispositions		
- Security Sales	$0.00	
- Money Market Fund Sales	$0.00	
- MMF Withdrawals	$0.00	
- Security Withdrawals	$0.00	
- Security Transfers	$0.00	
- Other Dispositions	$0.00	
- Maturites	$0.00	
- Calls	$0.00	
- Principal Paydowns	$0.00	
Total Dispositions		**$0.00**
Amortization/Accretion		
+/- Net Accretion	$185.32	
		$185.32
Gain/Loss on Dispositions		
+/- Realized Gain/Loss	$0.00	
		$0.00
ENDING BOOK VALUE		**$668,509.51**

CASH TRANSACTION SUMMARY		
BEGINNING BALANCE		**$3,918.75**
Acquisition		
Contributions	$0.00	
Security Sale Proceeds	$0.00	
Accrued Interest Received	$0.00	
Interest Received	$215.63	
Dividend Received	$0.00	
Principal on Maturities	$0.00	
Interest on Maturities	$0.00	
Calls/Redemption (Principal)	$0.00	
Interest from Calls/Redemption	$0.00	
Principal Paydown	$0.00	
Total Acquisitions	**$215.63**	
Dispositions		
Withdrawals	$0.00	
Security Purchase	$0.00	
Accrued Interest Paid	$0.00	
Total Dispositions	**$0.00**	
ENDING BOOK VALUE		**$4,134.38**

Brea CFD 2008 2 17 Reserve Fund

Account #10600

Holdings Report

As of June 30, 2021

CUSIP	Security Description	Par Value/Units	Purchase Date Book Yield	Cost Value Book Value	Mkt Price Mkt YTM	Market Value Accrued Int.	% of Port. Gain/Loss	Moody/S&P Fitch	Maturity Duration
MONEY MARKET FUND									
825252109	Invesco Treasury MMFD Private Class	4,134.38	Various 0.01%	4,134.38 4,134.38	1.00 0.01%	4,134.38 0.00	0.60% 0.00	Aaa / AAA AAA	0.00 0.00
Total Money Market Fund		**4,134.38**	**0.01%**	**4,134.38** **4,134.38**	**0.01%**	**4,134.38** **0.00**	**0.60%** **0.00**	**Aaa / AAA** **AAA**	**0.00** **0.00**
US TREASURY									
912828F21	US Treasury Note 2.125% Due 9/30/2021	110,000.00	06/28/2018 2.64%	108,242.58 109,865.50	100.51 0.08%	110,565.95 587.57	16.23% 700.45	Aaa / AA+ AAA	0.25 0.25
912828J43	US Treasury Note 1.75% Due 2/28/2022	110,000.00	06/13/2018 2.79%	105,986.72 109,283.24	101.11 0.09%	111,220.34 643.41	16.33% 1,937.10	Aaa / AA+ AAA	0.67 0.66
912828L24	US Treasury Note 1.875% Due 8/31/2022	110,000.00	06/13/2018 2.82%	105,887.89 108,861.76	102.04 0.13%	112,243.01 689.37	16.49% 3,381.25	Aaa / AA+ AAA	1.17 1.15
9128284D9	US Treasury Note 2.5% Due 3/31/2023	110,000.00	06/13/2018 2.84%	108,345.70 109,397.23	103.98 0.22%	114,382.84 691.26	16.80% 4,985.61	Aaa / AA+ AAA	1.75 1.71
912828WJ5	US Treasury Note 2.5% Due 5/15/2024	110,000.00	06/18/2019 1.84%	113,381.64 111,979.54	105.93 0.42%	116,526.96 351.22	17.06% 4,547.42	Aaa / AA+ AAA	2.88 2.78
91282CBC4	US Treasury Note 0.375% Due 12/31/2025	115,000.00	12/30/2020 0.38%	114,986.52 114,987.86	98.14 0.80%	112,866.18 1.17	16.48% (2,121.68)	Aaa / AA+ AAA	4.51 4.45
Total US Treasury		**665,000.00**	**2.20%**	**656,831.05** **664,375.13**	**0.29%**	**677,805.28** **2,964.00**	**99.40%** **13,430.15**	**Aaa / AA+** **AAA**	**1.88** **1.85**
TOTAL PORTFOLIO		**669,134.38**	**2.19%**	**660,965.43** **668,509.51**	**0.29%**	**681,939.66** **2,964.00**	**100.00%** **13,430.15**	**Aaa / AA+** **AAA**	**1.87** **1.84**
TOTAL MARKET VALUE PLUS ACCRUED						**684,903.66**			

Brea CFD 2008 2 17 Reserve Fund

Account #10600

Transaction Ledger

As of June 30, 2021

Transaction Type	Settlement Date	CUSIP	Quantity	Security Description	Price	Acq/Disp Yield	Amount	Interest Pur/Sold	Total Amount	Gain/Loss
ACQUISITIONS										
Purchase	06/30/2021	825252109	215.63	Invesco Treasury MMFD Private Class	1.000	0.01%	215.63	0.00	215.63	0.00
Subtotal			**215.63**				**215.63**	**0.00**	**215.63**	**0.00**
TOTAL ACQUISITIONS			**215.63**				**215.63**	**0.00**	**215.63**	**0.00**
OTHER TRANSACTIONS										
Interest	06/30/2021	91282CBC4	115,000.00	US Treasury Note 0.375% Due 12/31/2025	0.000		215.63	0.00	215.63	0.00
Subtotal			**115,000.00**				**215.63**	**0.00**	**215.63**	**0.00**
TOTAL OTHER TRANSACTIONS			**115,000.00**				**215.63**	**0.00**	**215.63**	**0.00**

Brea CFD 2008 2 17 Reserve Fund

Account #10600

Income Earned

As of June 30, 2021

CUSIP	Security Description	Trade Date Settle Date Units	Book Value: Begin Book Value: Acq Book Value: Disp Book Value: End	Prior Accrued Inc. Received Ending Accrued Total Interest	Accr. Of Discount Amort. Of Premium Net Accret/Amort Income Earned	Total Income
FIXED INCOME						
9128284D9	US Treasury Note 2.5% Due 03/31/2023	06/13/2018 06/14/2018 110,000.00	109,368.89 0.00 0.00 109,397.23	465.85 0.00 691.26 225.41	28.34 0.00 28.34 253.75	253.75
912828F21	US Treasury Note 2.125% Due 09/30/2021	06/28/2018 06/29/2018 110,000.00	109,821.15 0.00 0.00 109,865.50	395.97 0.00 587.57 191.60	44.35 0.00 44.35 235.95	235.95
912828J43	US Treasury Note 1.75% Due 02/28/2022	06/13/2018 06/14/2018 110,000.00	109,194.38 0.00 0.00 109,283.24	486.48 0.00 643.41 156.93	88.86 0.00 88.86 245.79	245.79
912828L24	US Treasury Note 1.875% Due 08/31/2022	06/13/2018 06/14/2018 110,000.00	108,781.60 0.00 0.00 108,861.76	521.23 0.00 689.37 168.14	80.16 0.00 80.16 248.30	248.30
912828WJ5	US Treasury Note 2.5% Due 05/15/2024	06/18/2019 06/19/2019 110,000.00	112,036.15 0.00 0.00 111,979.54	127.04 0.00 351.22 224.18	0.00 56.61 (56.61) 167.57	167.57
91282CBC4	US Treasury Note 0.375% Due 12/31/2025	12/30/2020 12/31/2020 115,000.00	114,987.64 0.00 0.00 114,987.86	181.08 215.63 1.17 35.72	0.22 0.00 0.22 35.94	35.94
			664,189.81 **0.00** **0.00**	**2,177.65** **215.63** **2,964.00**	**241.93** **56.61** **185.32**	
Total Fixed Income		**665,000.00**	**664,375.13**	**1,001.98**	**1,187.30**	**1,187.30**

Brea CFD 2008 2 17 Reserve Fund

Account #10600

Income Earned

As of June 30, 2021

CUSIP	Security Description	Trade Date Settle Date Units	Book Value: Begin Book Value: Acq Book Value: Disp Book Value: End	Prior Accrued Inc. Received Ending Accrued Total Interest	Accr. Of Discount Amort. Of Premium Net Accret/Amort Income Earned	Total Income
CASH & EQUIVALENT						
825252109	Invesco	Various	3,918.75	0.00	0.00	0.00
	Treasury MMFD Private Class	Various	215.63	0.00	0.00	
		4,134.38	0.00	0.00	0.00	
			4,134.38	0.00	0.00	
			3,918.75	**0.00**	**0.00**	
			215.63	**0.00**	**0.00**	
			0.00	**0.00**	**0.00**	
Total Cash & Equivalent		**4,134.38**	**4,134.38**	**0.00**	**0.00**	**0.00**
			668,108.56	**2,177.65**	**241.93**	
			215.63	**215.63**	**56.61**	
			0.00	**2,964.00**	**185.32**	
TOTAL PORTFOLIO		**669,134.38**	**668,509.51**	**1,001.98**	**1,187.30**	**1,187.30**

Brea CFD 2008 2 17 Reserve Fund

Account #10600

Cash Flow Report

As of June 30, 2021

Payment Date	Transaction Type	CUSIP	Quantity	Security Description	Principal Amount	Income	Total Amount
08/31/2021	Interest	912828L24	110,000.00	US Treasury Note 1.875% Due 8/31/2022	0.00	1,031.25	1,031.25
08/31/2021	Interest	912828J43	110,000.00	US Treasury Note 1.75% Due 2/28/2022	0.00	962.50	962.50
AUG 2021					**0.00**	**1,993.75**	**1,993.75**
09/30/2021	Interest	9128284D9	110,000.00	US Treasury Note 2.5% Due 3/31/2023	0.00	1,375.00	1,375.00
09/30/2021	Maturity	912828F21	110,000.00	US Treasury Note 2.125% Due 9/30/2021	110,000.00	1,168.75	111,168.75
SEP 2021					**110,000.00**	**2,543.75**	**112,543.75**
11/15/2021	Interest	912828WJ5	110,000.00	US Treasury Note 2.5% Due 5/15/2024	0.00	1,375.00	1,375.00
NOV 2021					**0.00**	**1,375.00**	**1,375.00**
12/31/2021	Interest	91282CBC4	115,000.00	US Treasury Note 0.375% Due 12/31/2025	0.00	215.63	215.63
DEC 2021					**0.00**	**215.63**	**215.63**
02/28/2022	Interest	912828L24	110,000.00	US Treasury Note 1.875% Due 8/31/2022	0.00	1,031.25	1,031.25
02/28/2022	Maturity	912828J43	110,000.00	US Treasury Note 1.75% Due 2/28/2022	110,000.00	962.50	110,962.50
FEB 2022					**110,000.00**	**1,993.75**	**111,993.75**
03/31/2022	Interest	9128284D9	110,000.00	US Treasury Note 2.5% Due 3/31/2023	0.00	1,375.00	1,375.00
MAR 2022					**0.00**	**1,375.00**	**1,375.00**
05/15/2022	Interest	912828WJ5	110,000.00	US Treasury Note 2.5% Due 5/15/2024	0.00	1,375.00	1,375.00
MAY 2022					**0.00**	**1,375.00**	**1,375.00**
06/30/2022	Interest	91282CBC4	115,000.00	US Treasury Note 0.375% Due 12/31/2025	0.00	215.63	215.63
JUN 2022					**0.00**	**215.63**	**215.63**
TOTAL					**220,000.00**	**11,087.51**	**231,087.51**

Important Disclosures

Chandler Asset Management, Inc. (“Chandler”) is an SEC registered investment adviser. For additional information about our firm, please see our current disclosures (Form ADV). To obtain a copy of our current disclosures, you may contact your client service representative by calling the number on the front of this statement or you may visit our website at www.chandlerasset.com.

Information contained in this monthly statement is confidential and is provided for informational purposes only and should not be construed as specific investment or legal advice. The information contained herein was obtained from sources believed to be reliable as of the date of this statement, but may become outdated or superseded at any time without notice.

Custody: Your qualified custodian bank maintains control of all assets reflected in this statement and we urge you to compare this statement to the one you receive from your qualified custodian. Chandler does not have any authority to withdraw or deposit funds from/to the custodian account.

Valuation: Prices are provided by IDC, an independent pricing source. In the event IDC does not provide a price or if the price provided is not reflective of fair market value, Chandler will obtain pricing from an alternative approved third party pricing source in accordance with our written valuation policy and procedures. Our valuation procedures are also disclosed in Item 5 of our Form ADV Part 2A.

Performance: Performance results are presented gross-of-advisory fees and represent the client’s Total Return. The deduction of advisory fees lowers performance results. These results include the reinvestment of dividends and other earnings. Past performance may not be indicative of future results. Therefore, clients should not assume that future performance of any specific investment or investment strategy will be profitable or equal to past performance levels. All investment strategies have the potential for profit or loss. Economic factors, market conditions or changes in investment strategies, contributions or withdrawals may materially alter the performance and results of your portfolio.

Source ice Data Indices, LLC ("ICE"), used with permission. ICE PERMITS USE OF THE ICE INDICES AND RELATED DATA ON AN "AS IS" BASIS; ICE, ITS AFFILIATES AND THEIR RESPECTIVE THIRD PARTY SUPPLIERS DISCLAIM ANY AND ALL WARRANTIES AND REPRESENTATIONS, EXPRESS AND/OR IMPLIED, INCLUDING ANY WARRANTIES OF MERCHANTABILITY OR FITNESS FOR A PARTICULAR PURPOSE OR USE, INCLUDING THE INDICES, INDEX DATA AND ANY DATA INCLUDED IN, RELATED TO, OR DERIVED THEREFROM. NEITHER ICE DATA, ITS AFFILIATES OR THEIR RESPECTIVE THIRD PARTY PROVIDERS GUARANTEE THE QUALITY, ADEQUACY, ACCURACY, TIMELINESS OR COMPLETENESS OF THE INDICES OR THE INDEX DATA OR ANY COMPONENT THEREOF, AND THE INDICES AND INDEX DATA AND ALL COMPONENTS THEREOF ARE PROVIDED ON AN "AS IS" BASIS AND LICENSEE'S USE IS AT LICENSEE'S OWN RISK. ICE DATA, ITS AFFILIATES AND THEIR RESPECTIVE THIRD PARTY DO NOT SPONSOR, ENDORSE, OR RECOMMEND CHANDLER, OR ANY OF ITS PRODUCTS OR SERVICES.

Index returns assume reinvestment of all distributions. Historical performance results for investment indexes generally do not reflect the deduction of transaction and/or custodial charges or the deduction of an investment management fee, the incurrence of which would have the effect of decreasing historical performance results. It is not possible to invest directly in an index.

Ratings: Ratings information have been provided by Moody’s, S&P and Fitch through data feeds we believe to be reliable as of the date of this statement, however we cannot guarantee its accuracy.

Security level ratings for U.S. Agency issued mortgage-backed securities (“MBS”) reflect the issuer rating because the securities themselves are not rated. The issuing U.S. Agency guarantees the full and timely payment of both principal and interest and carries a AA+/Aaa/AAA by S&P, Moody’s and Fitch respectively.

Benchmark Index & Disclosures

Benchmark Index	Disclosure
ICE BAML 3-5 Yr US Treasury/Agency Index	The ICE BAML 3-5 Year US Treasury & Agency Index tracks the performance of US dollar denominated US Treasury and nonsubordinated US agency debt issued in the US domestic market. Qualifying securities must have an investment grade rating (based on an average of Moody's, S&P and Fitch). Qualifying securities must have at least three years remaining term to final maturity and less than five years remaining term to final maturity, at least three years to maturity at time of issuance, a fixed coupon schedule and a minimum amount outstanding of $1 billion for sovereigns and $250 million for agencies. (Index: G2A0. Please visit www.mlindex.ml.com for more information)

City of Brea

COUNCIL COMMUNICATION

TO: Honorable Mayor and City Council Members

FROM: Bill Gallardo, City Manager

DATE: 08/17/2021

SUBJECT: Outgoing Payment Log and July 23 & 30 and August 6 & 13, 2021 City Disbursement Registers

RECOMMENDATION

Receive and file.

RESPECTFULLY SUBMITTED:

William Gallardo, City Manager
Prepared by: Alicia Brenner, Senior Fiscal Analyst
Concurrence: Cindy Russell, Administrative Services Director

Attachments

City Outgoing Payment Log
07-23-2021 Disbursement Register
07-30-2021 Disbursement Register
08-06-2021 Disbursement Register
08-13-2021 Disbursement Register

City of Brea
Outgoing Payment Log
July 2021

Effective Date	Vendor	Description		Amount
General Account Electronic payments				
7/2/2021	Brea Payroll	Brea staff payroll		890,449.06
7/2/2021	Brea Payroll	Employee deductions		96,498.44
7/2/2021	EDD	Payroll State taxes		60,075.76
7/2/2021	CA SDU	Child support payments		806.05
7/2/2021	IRS	Payroll Federal taxes		181,477.55
7/2/2021	Elavon	Credit card processing fees		8,664.74
7/6/2021	CALPERS	Medical payment		371,968.35
7/6/2021	CALPERS	Member retirement		217,342.47
7/6/2021	Elavon	Credit card processing fees		2,881.46
7/6/2021	Paypal	Paypal processing fees		109.45
7/7/2021	CALPERS	Member retirement		17,321.20
7/8/2021	AP Neon One	Theatre processing fees		220.50
7/8/2021	CA Dept of Tax	Sales tax		1,631.37
7/9/2021	ADP	ILJAOC Payroll service fee		126.45
7/16/2021	Brea Payroll	Brea staff payroll		964,315.85
7/16/2021	Brea Payroll	Employee deductions		98,944.67
7/16/2021	EDD	Payroll State taxes		61,550.32
7/16/2021	CA SDU	Child support payments		737.20
7/16/2021	IRS	Payroll Federal taxes		197,391.65
7/19/2021	CALPERS	Member retirement		228,633.79
7/20/2021	Telecheck	Telecheck processing fees		559.49
7/20/2021	Paymentus	Monthly service fee		5,181.03
7/23/2021	Citizens Business Bank	Monthly banking service fee		1,743.46
7/27/2021	CALPERS	Member retirement		10,223,883.00
7/29/2021	ILJAOC Payroll	ILJAOC staff salary & payroll taxes		13,119.23
7/30/2021	Brea Payroll	Brea staff payroll		980,140.29
7/30/2021	Brea Payroll	Employee deductions		24,555.43
7/30/2021	EDD	Payroll State taxes		59,391.47
7/30/2021	CA SDU	Child support payments		845.60
7/30/2021	IRS	Payroll Federal taxes		179,869.26
				14,890,434.59
Imprest Accounts				
	Various	Workers Compensation Claims		85,462.54
	Various	General Liability Claims		146,723.54
			Subtotal	232,186.08
				$ 15,122,620.67

City Disbursement Register

Between Jul 19, 2021 12:00 AM and Jul 23, 2021 11:59 PM

Check #	Vendor Name	Check Date	Vendor #	Budget Unit	Description	Amount
188190	911 VEHICLE	07/23/2021	12372	542222221	RADIO/ANTENNA CHG OUT	$12,363.36
			911 VEHICLE		**Total Check Amount:**	**$12,363.36**
188191	AAA ELECTRIC MOTOR SALES, INC.	07/23/2021	3615	490515151	HVAC PARTS	$180.82
			AAA ELECTRIC MOTOR SALES, INC.		**Total Check Amount:**	**$180.82**
188192	SUSAN ALBIN	07/23/2021	31278	110	CS-BCC REFUND COVID19	$10.00
			SUSAN ALBIN		**Total Check Amount:**	**$10.00**
188193	AON RISK INSURANCE SVCS WEST, INC.	07/23/2021	26311	460141474	21/22 CYBER LIAB INS	$10,841.25
			AON RISK INSURANCE SVCS WEST, INC.		**Total Check Amount:**	**$10,841.25**
188194	ARCON STRUCTURAL ENGINEERS, INC	07/23/2021	30265	510707958	STR ENGG SVCS MAY21	$6,050.00
			ARCON STRUCTURAL ENGINEERS, INC		**Total Check Amount:**	**$6,050.00**
188195	ARDURRA GROUP, INC.	07/23/2021	29147	840141412	ENGG SVCS MAY 2021	$46.25
			ARDURRA GROUP, INC.		**Total Check Amount:**	**$46.25**
188196	ASHLY ARRIETA	07/23/2021	25916	110	CS-BCC REFUND COVID19	$25.90
			ASHLY ARRIETA		**Total Check Amount:**	**$25.90**
188197	AT&T CALNET	07/23/2021	20391	475141471	CALNET JUNE 2021	$3,933.53
			AT&T CALNET		**Total Check Amount:**	**$3,933.53**
188198	AT&T LONG DISTANCE	07/23/2021	1737	475141471	807752441 7/4/21	$34.15
			AT&T LONG DISTANCE		**Total Check Amount:**	**$34.15**
188199	BANDERA ESTATES PARTNERSHIP	07/23/2021	29390	270323218	SENIOR SUBSIDY AUG21	$508.00
			BANDERA ESTATES PARTNERSHIP		**Total Check Amount:**	**$508.00**
188200	BERNIER REFRIGERATION GENERATIONS	07/23/2021	26187	490515151	SVC:P&E FREEZER @ CCC	$1,169.60
			BERNIER REFRIGERATION GENERATIONS		**Total Check Amount:**	**$1,169.60**
188201	BMLA INCORPORATED	07/23/2021	28095	510707936	PLAN UPDATES	$510.00
			BMLA INCORPORATED		**Total Check Amount:**	**$510.00**
188202	CA ASSOC FOR LOCAL ECON DEV (CALED)	07/23/2021	26861	110323214	21/22 MEMBERSHIP	$570.00
			CA ASSOC FOR LOCAL ECON DEV (CALED)		**Total Check Amount:**	**$570.00**
188203	CELLEBRITE USA CORP.	07/23/2021	22268	172212141	UFED4PC ULTIMATE SW	$4,300.00
			CELLEBRITE USA CORP.		**Total Check Amount:**	**$4,300.00**
188204	CINTAS	07/23/2021	24347	110404211	BCC FIRST AID RESTOCK	$127.07
		07/23/2021	24347	110404542	THTR FRST AID RESTOCK	$96.06
			CINTAS		**Total Check Amount:**	**$223.13**
188205	CITY OF FULLERTON	07/23/2021	12001	110222211	SHRDCMND 11012/26-4/2	$52,234.92
		07/23/2021	12001	110222221	SHRDCMND 11012/26-4/2	$98,879.02
		07/23/2021	12001	110222223	SHRDCMND 11012/26-4/2	$627.29
		07/23/2021	12001	480515161	SHRDCMND 11012/26-4/2	$1,201.10
		07/23/2021	12001	110222211	SHRDC AUDIT FY18-FY20	$4,638.73
		07/23/2021	12001	110222231	SHRDCMND 11012/26-4/2	$43,253.36

City Disbursement Register

Between Jul 19, 2021 12:00 AM and Jul 23, 2021 11:59 PM

Check #	Vendor Name	Check Date	Vendor #	Budget Unit	Description	Amount
			CITY OF FULLERTON		**Total Check Amount:**	**$200,834.42**
188206	ROBERT COGHLAN	07/23/2021	31282	420000000	CLOSED WATER ACCOUNT	$93.21
			ROBERT COGHLAN		**Total Check Amount:**	**$93.21**
188207	COMMERCIAL AQUATIC SERVICES, INC.	07/23/2021	25513	110404422	CHLORINE	$324.39
		07/23/2021	25513	110404422	BULK ACID	$350.84
			COMMERCIAL AQUATIC SERVICES, INC.		**Total Check Amount:**	**$675.23**
188208	DEPARTMENT OF TRANSPORTATION	07/23/2021	13722	510707251	HWAY CONST MGMT MAY21	$57,615.88
			DEPARTMENT OF TRANSPORTATION		**Total Check Amount:**	**$57,615.88**
188209	SIERRA DESCALZO	07/23/2021	31284	420000000	CLOSED WATER ACCOUNT	$47.72
			SIERRA DESCALZO		**Total Check Amount:**	**$47.72**
188210	SOUTHERN CALIFORNIA EDISON	07/23/2021	3343	110515121	ELECTRICITY JUN21	$5,966.84
		07/23/2021	3343	110515144	ELECTRICITY JUN21	$1,514.54
		07/23/2021	3343	490515151	ELECTRICITY JUN21	$42,103.09
		07/23/2021	3343	361515148	ELECTRICITY JUN21	$32.67
		07/23/2021	3343	110515141	ELECTRICITY JUN21	$1,741.52
		07/23/2021	3343	110515148	ELECTRICITY JUN21	$36.69
		07/23/2021	3343	360515145	ELECTRICITY JUN21	$679.10
		07/23/2021	3343	110515125	ELECTRICITY JUN21	$2,658.88
		07/23/2021	3343	110515143	ELECTRICITY JUN21	$766.16
			SOUTHERN CALIFORNIA EDISON		**Total Check Amount:**	**$55,499.49**
188211	FRANCHISE TAX BOARD/ST OF CALIF	07/23/2021	12043	110	571810253 071621 PR	$125.00
			FRANCHISE TAX BOARD/ST OF CALIF		**Total Check Amount:**	**$125.00**
188212	FRONTIER COMMUNICATIONS	07/23/2021	26183	420515131	5621821023 7/7-8/6	$62.92
			FRONTIER COMMUNICATIONS		**Total Check Amount:**	**$62.92**
188213	THE GAS COMPANY	07/23/2021	3749	490515151	GAS JUN21	$1,772.59
			THE GAS COMPANY		**Total Check Amount:**	**$1,772.59**
188214	GMS ELEVATOR SERVICES, INC.	07/23/2021	29109	110515125	MO.SVC:11 ELEV 7/1/21	$1,110.00
		07/23/2021	29109	490515151	MO.SVC:11 ELEV 7/1/21	$1,345.00
			GMS ELEVATOR SERVICES, INC.		**Total Check Amount:**	**$2,455.00**
188215	GOLDEN WEST COLLEGE	07/23/2021	9477	110212111	BASIC POLICE ACAD (3)	$6,891.00
			GOLDEN WEST COLLEGE		**Total Check Amount:**	**$6,891.00**
188216	GOUVIS ENGINEERING CONSULTING GROUP	07/23/2021	27960	110404521	SR CTR CAFE PLANS	$1,350.00
			GOUVIS ENGINEERING CONSULTING GROUP		**Total Check Amount:**	**$1,350.00**
188217	HERITAGE PLAZA	07/23/2021	29392	270323218	SENIOR SUBSIDY AUG21	$254.00
			HERITAGE PLAZA		**Total Check Amount:**	**$254.00**
188218	HF&H CONSULTANTS, LLC	07/23/2021	27542	440515122	SB1383 CONTR ASST JUN	$729.25
			HF&H CONSULTANTS, LLC		**Total Check Amount:**	**$729.25**
188219	HOLLYDALE MOBILE ESTATES	07/23/2021	29393	270323218	SENIOR SUBSIDY AUG21	$254.00

City Disbursement Register

Between Jul 19, 2021 12:00 AM and Jul 23, 2021 11:59 PM

Check #	Vendor Name	Check Date	Vendor #	Budget Unit	Description	Amount
			HOLLYDALE MOBILE ESTATES		**Total Check Amount:**	**$254.00**
188220	CLARISA JIMNENEZ	07/23/2021	31287	110	SUMMER DAYCAMP REFUND	$150.00
			CLARISA JIMNENEZ		**Total Check Amount:**	**$150.00**
188221	MARIA JOHANNES	07/23/2021	31277	110	BCC TRAINER REFUND	$480.00
			MARIA JOHANNES		**Total Check Amount:**	**$480.00**
188222	KABBARA ENGINEERING	07/23/2021	23694	510707458	CONST ENGG SUPP MAR21	$2,560.00
			KABBARA ENGINEERING		**Total Check Amount:**	**$2,560.00**
188223	KAREN WARNER ASSOCIATES, INC.	07/23/2021	19143	110323231	2021-29 HSG ELEMENT	$19,667.00
			KAREN WARNER ASSOCIATES, INC.		**Total Check Amount:**	**$19,667.00**
188224	YUN KIM	07/23/2021	31285	110	SUMMER DAYCAMP REFUND	$300.00
			YUN KIM		**Total Check Amount:**	**$300.00**
188225	WILLIAM F. KIMBLE	07/23/2021	28072	420000000	CLOSED WATER ACCOUNT	$60.26
			WILLIAM F. KIMBLE		**Total Check Amount:**	**$60.26**
188226	ERIC AND/OR JENNIFER KRAUS	07/23/2021	27721	420000000	CLOSED WATER ACCOUNT	$116.24
			ERIC AND/OR JENNIFER KRAUS		**Total Check Amount:**	**$116.24**
188227	LAKE PARK BREA LP	07/23/2021	5289	270323218	SENIOR SUBSIDY AUG21	$1,270.00
			LAKE PARK BREA LP		**Total Check Amount:**	**$1,270.00**
188228	LAKE PARK BREA LP	07/23/2021	5289	110141411	LL WTR DISC DEC-JUN21	$1,433.32
			LAKE PARK BREA LP		**Total Check Amount:**	**$1,433.32**
188229	LINSCOTT, LAW & GREENSPAN ENGINEERS	07/23/2021	29408	840141412	CORR TO 14368-00199	$440.00
		07/23/2021	29408	840141412	CORR TO 14368-00205PY	($880.00)
		07/23/2021	29408	840141412	CORR TO 14368-00211	$2,580.00
		07/23/2021	29408	840141412	CORR TO 14368-00211PY	($2,580.00)
		07/23/2021	29408	840141412	CORR TO 14368-00199PY	($440.00)
		07/23/2021	29408	840141412	CORR TO 14368-00204	$2,140.00
		07/23/2021	29408	840141412	CORR TO 14368-00204PY	($2,140.00)
		07/23/2021	29408	840141412	CORR TO 14368-00207	$880.00
		07/23/2021	29408	840141412	TRC ENGG SVCS MAR21	$3,205.00
		07/23/2021	29408	840141412	CORR TO 14368-00205	$880.00
		07/23/2021	29408	840141412	CORR TO 14368-00207PY	($880.00)
			LINSCOTT, LAW & GREENSPAN ENGINEERS		**Total Check Amount:**	**$3,205.00**
188230	GRACE A LOVE	07/23/2021	31283	420000000	CLOSED WATER ACCOUNT	$146.57
			GRACE A LOVE		**Total Check Amount:**	**$146.57**
188231	LU'S LIGHTHOUSE, INC.	07/23/2021	28330	480515161	LIGHTS	$658.57
			LU'S LIGHTHOUSE, INC.		**Total Check Amount:**	**$658.57**
188232	MARIPOSA LANDSCAPES, INC.	07/23/2021	27959	110515148	CITY FAC/TRAILS JUN21	$1,989.00
		07/23/2021	27959	110515148	CITY FAC/TRAILS MAY21	$1,989.00

City Disbursement Register

Between Jul 19, 2021 12:00 AM and Jul 23, 2021 11:59 PM

Check #	Vendor Name	Check Date	Vendor #	Budget Unit	Description	Amount
188232	MARIPOSA LANDSCAPES, INC.	07/23/2021	27959	110515143	CITY FAC/TRAILS JUN21	$5,585.67
		07/23/2021	27959	110515143	CITY FAC/TRAILS MAY21	$5,585.67
		07/23/2021	27959	361515148	CITY FAC/TRAILS JUN21	$108.33
		07/23/2021	27959	361515148	CITY FAC/TRAILS MAY21	$108.33
		MARIPOSA LANDSCAPES, INC.			**Total Check Amount:**	**$15,366.00**
188233	MARTIN CONTAINER, INC.	07/23/2021	31216	110212131	EQPT STORAGE/CONTAINR	$4,967.28
		MARTIN CONTAINER, INC.			**Total Check Amount:**	**$4,967.28**
188234	MCA DIRECT	07/23/2021	31280	110323231	VAULT PAPER	$112.27
		MCA DIRECT			**Total Check Amount:**	**$112.27**
188235	MEDPOST URGENT CARE - BREA	07/23/2021	27547	110141481	HR MED SVCS JUN21	$270.00
		MEDPOST URGENT CARE - BREA			**Total Check Amount:**	**$270.00**
188236	GILBERT MORENO	07/23/2021	19430	840000000	DEVELOPER FEE REFUND	$1,805.35
		GILBERT MORENO			**Total Check Amount:**	**$1,805.35**
188237	MUNICIPAL DENTAL POOL	07/23/2021	30638	110	DELTA DENTAL JUL 2021	$17,128.61
		MUNICIPAL DENTAL POOL			**Total Check Amount:**	**$17,128.61**
188238	MUSIC THEATRE INTERNATIONAL	07/23/2021	1321	110404542	0037818 BEAUTY/BEAST	$4,665.38
		MUSIC THEATRE INTERNATIONAL			**Total Check Amount:**	**$4,665.38**
188239	KEN NICHOLSON	07/23/2021	31286	830	FORFEITURE FEE REFUND	$50.00
		KEN NICHOLSON			**Total Check Amount:**	**$50.00**
188240	OFFICE DEPOT, INC	07/23/2021	4743	110212111	OFFICE SUPPLIES	$25.30
		OFFICE DEPOT, INC			**Total Check Amount:**	**$25.30**
188241	ONYX PAVING COMPANY, INC.	07/23/2021	30667	420000000	CLOSED WATER ACCOUNT	$4,927.82
		ONYX PAVING COMPANY, INC.			**Total Check Amount:**	**$4,927.82**
188242	ORANGE VILLA SENIOR APARTMENTS	07/23/2021	29394	270323218	SENIOR SUBSIDY AUG21	$254.00
		ORANGE VILLA SENIOR APARTMENTS			**Total Check Amount:**	**$254.00**
188243	P.L. HAWN COMPANY, INC.	07/23/2021	10742	911515151	HVAC FILTERS	$3,807.23
		P.L. HAWN COMPANY, INC.			**Total Check Amount:**	**$3,807.23**
188244	P.W. STEPHENS ENVIRONMENTAL	07/23/2021	23843	510707923	ASBESTOS ABTEMNT@YARD	$43,800.00
		P.W. STEPHENS ENVIRONMENTAL			**Total Check Amount:**	**$43,800.00**
188245	KYUNGHOON PARK	07/23/2021	24355	420000000	CLOSED WATER ACCOUNT	$139.17
		KYUNGHOON PARK			**Total Check Amount:**	**$139.17**
188246	PLAYSCRIPTS	07/23/2021	24845	110404542	ROYALTIES: ITS A WOND	$1,600.00
		PLAYSCRIPTS			**Total Check Amount:**	**$1,600.00**
188247	PREMIUM RV INC.	07/23/2021	11981	480515161	HITCHES	$207.80
		PREMIUM RV INC.			**Total Check Amount:**	**$207.80**
188248	PRFORMANCE CONTRACTORS, INC.	07/23/2021	29368	490515151	C&M TI REMODEL-BOUSD	$4,400.00
		PRFORMANCE CONTRACTORS, INC.			**Total Check Amount:**	**$4,400.00**
188249	PUBLIC AGENCY RISK MGMT ASSOC	07/23/2021	30445	470141483	21/22 PUBLIC ENT MEMB	$150.00

City Disbursement Register

Between Jul 19, 2021 12:00 AM and Jul 23, 2021 11:59 PM

Check #	Vendor Name	Check Date	Vendor #	Budget Unit	Description	Amount
		PUBLIC AGENCY RISK MGMT ASSOC			**Total Check Amount:**	**$150.00**
188250	RENNE SLOAN HOTLZMAN SAKAI, LLP	07/23/2021	27580	110141481	2021 COMP SURVEY	$1,600.00
		RENNE SLOAN HOTLZMAN SAKAI, LLP			**Total Check Amount:**	**$1,600.00**
188251	S.C. YAMAMOTO, INC.	07/23/2021	22021	110515141	PARKS MOWING JUN21	$5,390.00
		07/23/2021	22021	341515112	MD#1 LANDSCAPE JUN21	$1,040.00
		07/23/2021	22021	360515145	PARKS MOWING JUN21	$280.00
		07/23/2021	22021	343515112	MD#3 LANDSCAPE JUN21	$1,760.00
		07/23/2021	22021	110515143	CITY LANDSCAPE JUN21	$10,936.67
		07/23/2021	22021	346515112	MD#6 LANDSCAPE JUN21	$5,000.00
		07/23/2021	22021	347515112	MD#7 LANDSCAPE JUN21	$840.00
		07/23/2021	22021	361515143	CITY LANDSCAPE JUN21	$693.33
		S.C. YAMAMOTO, INC.			**Total Check Amount:**	**$25,940.00**
188252	SCAG	07/23/2021	1341	110111145	FY21/22 MEMBERSHIP	$5,068.00
		SCAG			**Total Check Amount:**	**$5,068.00**
188253	ANTONIO SENTENO	07/23/2021	31279	830	FORFEITURE FEE REFUND	$50.00
		ANTONIO SENTENO			**Total Check Amount:**	**$50.00**
188254	SHEA HOMES	07/23/2021	6597	840000000	DEVELOPER FEE REFUND	$12,062.51
		SHEA HOMES			**Total Check Amount:**	**$12,062.51**
188255	SPARKLETTS	07/23/2021	3001	110111161	COUNCIL MTG WTR MAY21	$26.09
		SPARKLETTS			**Total Check Amount:**	**$26.09**
188256	STATEWIDE TRAFFIC SAFETY&SIGNS INC	07/23/2021	30668	510707702	R+R SIGNS PROJ PP#4	$7,455.00
		STATEWIDE TRAFFIC SAFETY&SIGNS INC			**Total Check Amount:**	**$7,455.00**
188257	TRAUMA INTERVENTION PROGRAMS, INC.	07/23/2021	17230	110212121	21/22 AGENCY USER FEE	$5,199.00
		TRAUMA INTERVENTION PROGRAMS, INC.			**Total Check Amount:**	**$5,199.00**
188258	UNIFIRST CORPORATION	07/23/2021	27988	110212131	PD LAUNDRY SVCS 7/5	$24.88
		UNIFIRST CORPORATION			**Total Check Amount:**	**$24.88**
188259	CF UNITED LLC	07/23/2021	30700	480515161	CAR WASHES JUNE 2021	$341.60
		CF UNITED LLC			**Total Check Amount:**	**$341.60**
188260	USC FOUNDATION	07/23/2021	10128	420515131	21/22 CROSS CONNCTION	$573.10
		USC FOUNDATION			**Total Check Amount:**	**$573.10**
188261	VERIZON CONNECT NWF, INC.	07/23/2021	25293	480515161	PW GPS FEES JUN21	$893.00
		VERIZON CONNECT NWF, INC.			**Total Check Amount:**	**$893.00**
188263	VERIZON WIRELESS	07/23/2021	21122	110111143	9882478318 5/23-6/22	$132.89
		07/23/2021	21122	110111161	9882478318 5/23-6/22	$51.76
		07/23/2021	21122	110141424	9882478318 5/23-6/22	$51.76
		07/23/2021	21122	110212121	9882478318 5/23-6/22	$3,920.00
		07/23/2021	21122	110323231	9882478318 5/23-6/22	$51.76

City Disbursement Register

Between Jul 19, 2021 12:00 AM and Jul 23, 2021 11:59 PM

Check #	Vendor Name	Check Date	Vendor #	Budget Unit	Description	Amount
188263	VERIZON WIRELESS	07/23/2021	21122	110323241	9882478318 5/23-6/22	$51.76
		07/23/2021	21122	110323243	9882478318 5/23-6/22	$51.76
		07/23/2021	21122	110404311	9882478318 5/23-6/22	$539.19
		07/23/2021	21122	420515131	9882478318 5/23-6/22	$874.40
		07/23/2021	21122	460141474	9882478318 5/23-6/22	$143.72
		07/23/2021	21122	110111151	9882478318 5/23-6/22	$103.52
		07/23/2021	21122	110222223	9882478318 5/23-6/22	$1,681.73
		07/23/2021	21122	410515124	9882478318 5/23-6/22	$30.02
		07/23/2021	21122	420141421	9882478318 5/23-6/22	$114.03
		07/23/2021	21122	475141471	9882478318 5/23-6/22	$551.72
		07/23/2021	21122	110141411	9882478318 5/23-6/22	$30.02
		07/23/2021	21122	110141441	9882478318 5/23-6/22	$51.76
		07/23/2021	21122	110515171	9882478318 5/23-6/22	$217.66
		07/23/2021	21122	174222222	9882478318 5/23-6/22	$621.91
		07/23/2021	21122	110111111	9882478318 5/23-6/22	$51.76
		07/23/2021	21122	110141481	9882478318 5/23-6/22	$51.76
		07/23/2021	21122	110323212	9882478318 5/23-6/22	$51.76
		07/23/2021	21122	110323242	9882478318 5/23-6/22	$51.76
		07/23/2021	21122	110404525	9882478318 5/23-6/22	$103.52
		07/23/2021	21122	430515123	9882478318 5/23-6/22	$705.51
		07/23/2021	21122	440515122	9882478318 5/23-6/22	$51.76
			VERIZON WIRELESS		**Total Check Amount:**	**$10,339.20**
188264	VERIZON WIRELESS	07/23/2021	21122	110212121	9883284874 6/4-7/3	$51.02
			VERIZON WIRELESS		**Total Check Amount:**	**$51.02**
188265	YORBA REGIONAL ANIMAL HOSPITAL	07/23/2021	18528	110212131	VET SVCS MIRK	$443.48
			YORBA REGIONAL ANIMAL HOSPITAL		**Total Check Amount:**	**$443.48**
188266	YOUNGBLOOD & ASSOCIATES	07/23/2021	24905	110141481	POLYGRAPH SVCS JUN21	$4,550.00
			YOUNGBLOOD & ASSOCIATES		**Total Check Amount:**	**$4,550.00**
					Check Subtotal	**$577,765.75**
V45109	A-1 ENTERPRISES INC.	07/23/2021	27868	110515148	FENCE RENTAL	$1,324.00
			A-1 ENTERPRISES INC.		**Total Check Amount:**	**$1,324.00**
V45110	ADMINISTRATIVE & PROF	07/23/2021	3344	110	DED:4010 APEA MEMBR	$516.00
			ADMINISTRATIVE & PROF		**Total Check Amount:**	**$516.00**
V45111	THE ADVANTAGE GROUP	07/23/2021	24539	110	DED:808B FSA DEPCAR	$1,787.23
		07/23/2021	24539	110	DED:808C FSA UR MED	$5,877.79
			THE ADVANTAGE GROUP		**Total Check Amount:**	**$7,665.02**
V45112	ALL CITY MANAGEMENT SERVICES INC	07/23/2021	6604	110212132	CRSSNG GRDS 5/30-6/12	$1,119.83

City Disbursement Register

Between Jul 19, 2021 12:00 AM and Jul 23, 2021 11:59 PM

Check #	Vendor Name	Check Date	Vendor #	Budget Unit	Description	Amount
		ALL CITY MANAGEMENT SERVICES INC			**Total Check Amount:**	**$1,119.83**
V45113	ALTA LANGUAGE SERVICES, INC	07/23/2021	25953	110141481	LISTENING/SPKING TEST	$275.00
		ALTA LANGUAGE SERVICES, INC			**Total Check Amount:**	**$275.00**
V45114	ARC DOCUMENT SOLUTIONS	07/23/2021	23645	510707936	PLAN COPIES	$178.93
		ARC DOCUMENT SOLUTIONS			**Total Check Amount:**	**$178.93**
V45115	LEO ARNOLD	07/23/2021	22721	110141481	BCKGRND INVESTIGATION	$10,800.00
		LEO ARNOLD			**Total Check Amount:**	**$10,800.00**
V45116	AZTECA SYSTEMS LLC	07/23/2021	24556	110515111	CITYWORKS LIC 21/22	$11,000.00
		AZTECA SYSTEMS LLC			**Total Check Amount:**	**$11,000.00**
V45117	BEST LAWN MOWER SERVICE	07/23/2021	16230	480515161	BLADES	$225.12
		07/23/2021	16230	480515161	CHAINS	$455.39
		BEST LAWN MOWER SERVICE			**Total Check Amount:**	**$680.51**
V45118	BPSEA MEMORIAL FOUNDATION	07/23/2021	14990	110	DED:4050 MEMORIAL	$177.00
		BPSEA MEMORIAL FOUNDATION			**Total Check Amount:**	**$177.00**
V45119	BREA CITY EMPLOYEES ASSOCIATION	07/23/2021	3236	110	DED:4005 BCEA MEMBR	$530.00
		BREA CITY EMPLOYEES ASSOCIATION			**Total Check Amount:**	**$530.00**
V45120	BREA FIREFIGHTERS ASSOCIATION	07/23/2021	3237	110	DED:4016 ASSOC MEMB	$2,669.50
		BREA FIREFIGHTERS ASSOCIATION			**Total Check Amount:**	**$2,669.50**
V45121	BREA POLICE ASSOCIATION	07/23/2021	3769	110	DED:4030 BPA REG	$3,450.00
		BREA POLICE ASSOCIATION			**Total Check Amount:**	**$3,450.00**
V45122	BREA POLICE ATHLETIC LEAGUE	07/23/2021	1068	110	DED:5010 B.P.A.L.	$137.50
		BREA POLICE ATHLETIC LEAGUE			**Total Check Amount:**	**$137.50**
V45123	BREA POLICE MANAGEMENT ASSOCIATION	07/23/2021	21189	110	DED:4020 PMA MEMBRS	$195.00
		07/23/2021	21189	110	DED:4019 LDF MEMBRS	$9.50
		BREA POLICE MANAGEMENT ASSOCIATION			**Total Check Amount:**	**$204.50**
V45124	BREA TOWING	07/23/2021	16399	110212121	TOWING FEES JUNE 2021	$535.50
		07/23/2021	16399	110212132	TOWING FEES JUNE 2021	$1,625.35
		BREA TOWING			**Total Check Amount:**	**$2,160.85**
V45125	OMAR F. BRIOSO	07/23/2021	15737	110212111	FORCE/DE-ESCALATION	$24.00
		OMAR F. BRIOSO			**Total Check Amount:**	**$24.00**
V45126	C. WELLS PIPELINE MATERIALS INC	07/23/2021	13055	110515141	BACKFLOW DEVICES	$4,102.04
		07/23/2021	13055	420515131	METER BOXES	$2,457.78
		07/23/2021	13055	510707458	METER BOXES	$4,223.80
		07/23/2021	13055	110515143	BACKFLOW DEVICES	$3,922.10
		C. WELLS PIPELINE MATERIALS INC			**Total Check Amount:**	**$14,705.72**
V45127	C.I. BUSINESS EQUIPMENT INC	07/23/2021	6520	110141441	21/22 SHREDDER WARR	$555.00
		C.I. BUSINESS EQUIPMENT INC			**Total Check Amount:**	**$555.00**
V45128	CANNINGS ACE HARDWARE	07/23/2021	15828	110515125	STRAW HAT	$11.90

City Disbursement Register

Between Jul 19, 2021 12:00 AM and Jul 23, 2021 11:59 PM

Check #	Vendor Name	Check Date	Vendor #	Budget Unit	Description	Amount
V45128	CANNINGS ACE HARDWARE	07/23/2021	15828	480515161	FLASHLIGHTS	$62.76
		07/23/2021	15828	480515161	CREDIT: INV#489699	($62.76)
			CANNINGS ACE HARDWARE		**Total Check Amount:**	**$11.90**
V45129	CIVICPLUS	07/23/2021	23925	110111151	CITY MKTG/BRANDING	$3,330.00
			CIVICPLUS		**Total Check Amount:**	**$3,330.00**
V45130	CLINICAL LABORATORY OF	07/23/2021	3390	420515131	WATER QLTY TEST JUN21	$1,296.00
			CLINICAL LABORATORY OF		**Total Check Amount:**	**$1,296.00**
V45131	CODING MINDS, INC	07/23/2021	29939	110404145	MINECRAFT/ROBLOX DEV	$457.60
			CODING MINDS, INC		**Total Check Amount:**	**$457.60**
V45132	COMPUTER PROTECTION TECHNOLOGY	07/23/2021	17263	110515125	UPS BATT MAINT SVC	$1,542.00
		07/23/2021	17263	490515151	UPS BATT MAINT SVC	$1,542.00
			COMPUTER PROTECTION TECHNOLOGY		**Total Check Amount:**	**$3,084.00**
V45133	CORE & MAIN LP	07/23/2021	27049	420515131	PLUMBING SUPPLIES	$1,163.70
			CORE & MAIN LP		**Total Check Amount:**	**$1,163.70**
V45134	CSG CONSULTANTS	07/23/2021	25540	110000000	INSP SVCS MAY 2021	$252.00
		07/23/2021	25540	84032324I	INSP SVCS MAY 2021	$1,248.00
			CSG CONSULTANTS		**Total Check Amount:**	**$1,500.00**
V45135	DANGELO CO	07/23/2021	4562	110515141	IRRIGATION PARTS	$92.81
			DANGELO CO		**Total Check Amount:**	**$92.81**
V45136	DANIELS TIRE SERVICE	07/23/2021	3133	480515161	TIRES	$7,167.24
		07/23/2021	3133	480515161	CREDIT: INV#329014622	($3,351.11)
			DANIELS TIRE SERVICE		**Total Check Amount:**	**$3,816.13**
V45137	ELLIOT AUTO SUPPLY CO., INC.	07/23/2021	3504	480515161	BATTERY	$142.99
			ELLIOT AUTO SUPPLY CO., INC.		**Total Check Amount:**	**$142.99**
V45138	DANIEL FENSTERMAKER	07/23/2021	27087	110	REFUND 062221 OVRPYMT	$0.10
			DANIEL FENSTERMAKER		**Total Check Amount:**	**$0.10**
V45139	FIX AUTO LA HABRA	07/23/2021	28720	480515161	AUTOBODY REPAIR #1918	$3,191.11
			FIX AUTO LA HABRA		**Total Check Amount:**	**$3,191.11**
V45140	GENERAL PUMP COMPANY	07/23/2021	16281	420515131	PUMP MAINT/NEW SHAFT	$11,717.84
			GENERAL PUMP COMPANY		**Total Check Amount:**	**$11,717.84**
V45141	GEOFFREY HARLAN GOBLE	07/23/2021	27565	110212111	FIELD TRNG OFFICER	$40.00
			GEOFFREY HARLAN GOBLE		**Total Check Amount:**	**$40.00**
V45142	DON GOLDEN	07/23/2021	10729	110000000	INSP SVCS 7/1-7/14	($4,756.00)
		07/23/2021	10729	84032324I	INSP SVCS 7/1-7/14	$13,456.00
			DON GOLDEN		**Total Check Amount:**	**$8,700.00**
V45143	HACE INC.	07/23/2021	27807	110404521	SR CTR CAFE PLANS	$4,422.04
			HACE INC.		**Total Check Amount:**	**$4,422.04**
V45144	HOLLY ELECTRIC INC.	07/23/2021	27530	343515112	STREET LIGHT REPAIR	$1,063.98

City Disbursement Register

Between Jul 19, 2021 12:00 AM and Jul 23, 2021 11:59 PM

Check #	Vendor Name	Check Date	Vendor #	Budget Unit	Description	Amount
V45144	HOLLY ELECTRIC INC.	07/23/2021	27530	344515112	STREET LIGHT REPAIR	$198.98
		07/23/2021	27530	346515112	STREET LIGHT REPAIR	$671.48
			HOLLY ELECTRIC INC.		**Total Check Amount:**	**$1,934.44**
V45145	INTERWEST CONSULTING GROUP, INC.	07/23/2021	28473	510707278	CIP CONST MGMT APR21	$31,550.00
		07/23/2021	28473	510707458	CIP CONST MGMT APR21	$29,900.00
			INTERWEST CONSULTING GROUP, INC.		**Total Check Amount:**	**$61,450.00**
V45146	IPARQ	07/23/2021	21583	110323241	PERMIT FEES JUN 2021	$758.50
			IPARQ		**Total Check Amount:**	**$758.50**
V45147	KELLY PAPER	07/23/2021	7039	110141441	SUPPLIES:REPROGRAPHCS	$77.34
			KELLY PAPER		**Total Check Amount:**	**$77.34**
V45148	KIMBALL MIDWEST	07/23/2021	23053	480515161	NUTS AND BOLTS	$332.38
			KIMBALL MIDWEST		**Total Check Amount:**	**$332.38**
V45149	KREUZER CONSULTING GROUP	07/23/2021	22072	510707299	CONSTMGMT OCT20-JUN21	$4,265.00
			KREUZER CONSULTING GROUP		**Total Check Amount:**	**$4,265.00**
V45150	KRONOS INCORPORATED	07/23/2021	22688	110222223	IVR SVCS MAY 2021	$22.80
			KRONOS INCORPORATED		**Total Check Amount:**	**$22.80**
V45151	KWIK KLEEN	07/23/2021	23771	480515161	PARTS WASHER SVC 7/8	$150.00
			KWIK KLEEN		**Total Check Amount:**	**$150.00**
V45152	FRANCESCO LA TORRE	07/23/2021	24398	110404521	JUNE 2021 MILEAGE	$61.04
			FRANCESCO LA TORRE		**Total Check Amount:**	**$61.04**
V45153	LEHR	07/23/2021	26035	480515161	VEHICLE SAFE STOP	$264.44
			LEHR		**Total Check Amount:**	**$264.44**
V45154	LEIGHTON CONSULTING, INC	07/23/2021	22203	510707453	GEOTECH SVCS MAY21	$4,342.45
		07/23/2021	22203	510707457	GEOTECH SVCS MAY21	$5,200.51
			LEIGHTON CONSULTING, INC		**Total Check Amount:**	**$9,542.96**
V45155	LIFE-ASSIST, INC.	07/23/2021	10530	174222222	PM SUPPLIES FS2	$85.49
		07/23/2021	10530	174222222	PM SUPPLIES FS4	$157.58
			LIFE-ASSIST, INC.		**Total Check Amount:**	**$243.07**
V45156	LINCOLN AQUATICS	07/23/2021	17902	490515151	ADA LIFT COVER	$469.19
			LINCOLN AQUATICS		**Total Check Amount:**	**$469.19**
V45157	MAD SCIENCE	07/23/2021	5399	110404145	ROBOTIC LABWORKS	$1,787.50
			MAD SCIENCE		**Total Check Amount:**	**$1,787.50**
V45158	WILLIAM MONTALVO	07/23/2021	12387	110212111	TRAINING EXPENSES	$16.00
			WILLIAM MONTALVO		**Total Check Amount:**	**$16.00**
V45159	MUNICIPAL WATER DISTRICT	07/23/2021	3784	420515131	WATER DELIVERY JUN21	$52,835.15
			MUNICIPAL WATER DISTRICT		**Total Check Amount:**	**$52,835.15**
V45160	ZULEYMA SARMIENTO MURPHY	07/23/2021	31281	110212111	TRAINING EXPENSES	$40.00
			ZULEYMA SARMIENTO MURPHY		**Total Check Amount:**	**$40.00**

City Disbursement Register

Between Jul 19, 2021 12:00 AM and Jul 23, 2021 11:59 PM

Check #	Vendor Name	Check Date	Vendor #	Budget Unit	Description	Amount
V45161	MYERS AND SONS	07/23/2021	21624	110515121	STOP SIGNS FOR ELM ST	$825.90
		07/23/2021	21624	110515121	SIGN MATERIAL HRDWARE	$174.56
			MYERS AND SONS		**Total Check Amount:**	**$1,000.46**
V45163	ONWARD ENGINEERING	07/23/2021	22106	110515171	TO CORRECT 5592	($134.00)
		07/23/2021	22106	84051517I	INSP SVCS JAN 2021	$134.00
		07/23/2021	22106	110000000	INSP SVCS APR21	($1,988.00)
		07/23/2021	22106	84051517I	INSP SVCS APR21	$10,653.00
		07/23/2021	22106	110000000	INSP SVCS APR 2021	($1,452.00)
		07/23/2021	22106	110515171	INSP SVCS APR 2021	$330.00
		07/23/2021	22106	110515171	INSP SVCS APR21	$935.00
		07/23/2021	22106	510707471	INSP SVCS APR 2021	$110.00
		07/23/2021	22106	84051517I	INSP SVCS APR 2021	$8,107.00
			ONWARD ENGINEERING		**Total Check Amount:**	**$16,695.00**
V45164	ORANGE COUNTY SANITATION DIST.	07/23/2021	14689	110	COMRCL SWR FEES JUN21	$1,587.99
		07/23/2021	14689	110000000	5% COLL:COMM SF JUN21	($79.40)
			ORANGE COUNTY SANITATION DIST.		**Total Check Amount:**	**$1,508.59**
V45165	PARACLETE FIRE AND SAFETY, INC.	07/23/2021	17760	110222223	FS3 FIRE EXT SVC 7/1	$125.57
			PARACLETE FIRE AND SAFETY, INC.		**Total Check Amount:**	**$125.57**
V45166	PARSONS TRANSPORTATION GROUP	07/23/2021	25626	510707251	CONST SUPPORT APR21	$26,763.11
		07/23/2021	25626	510707251	CONST SUPPORT MAY21	$6,815.61
			PARSONS TRANSPORTATION GROUP		**Total Check Amount:**	**$33,578.72**
V45167	PLUMBING WHOLESALE OUTLET, INC.	07/23/2021	18392	510707923	FS#1 PLUMBING PARTS	$1,396.43
			PLUMBING WHOLESALE OUTLET, INC.		**Total Check Amount:**	**$1,396.43**
V45168	QUALITY PLACEMENT AUTHORITY, LLC	07/23/2021	27027	110141481	TEMP STAFF 7/11/2021	$581.40
			QUALITY PLACEMENT AUTHORITY, LLC		**Total Check Amount:**	**$581.40**
V45169	QUARTECH CORRECTIONS LLC	07/23/2021	29933	950000000	ILJAOC SW SUPP JUN21	$1,500.00
		07/23/2021	29933	950000000	ILJAOC BAILMOTN JUN21	$300.00
			QUARTECH CORRECTIONS LLC		**Total Check Amount:**	**$1,800.00**
V45170	READWRITE EDUCATIONAL, INC.	07/23/2021	3444	110404145	MATH/READING DEV	$750.00
			READWRITE EDUCATIONAL, INC.		**Total Check Amount:**	**$750.00**
V45171	RICHARDS, WATSON & GERSHON	07/23/2021	8978	840141412	195 SAFER AVENUES MAY	$25,790.00
			RICHARDS, WATSON & GERSHON		**Total Check Amount:**	**$25,790.00**
V45172	ALFRED ANTHONY RODRIGUEZ	07/23/2021	27489	110212111	FORCE/DE-ESCALATION	$24.00
			ALFRED ANTHONY RODRIGUEZ		**Total Check Amount:**	**$24.00**
V45173	ROLLINS, INC DBA ORKIN, LLC.	07/23/2021	30616	420515131	PEST CONTROL JUN21	$175.00
		07/23/2021	30616	490515151	PEST CONTROL JUN21	$1,235.00
		07/23/2021	30616	110515141	PEST CONTROL JUN21	$240.00
		07/23/2021	30616	110515125	PEST CONTROL JUN21	$345.00

City Disbursement Register

Between Jul 19, 2021 12:00 AM and Jul 23, 2021 11:59 PM

Check #	Vendor Name	Check Date	Vendor #	Budget Unit	Description	Amount
			ROLLINS, INC DBA ORKIN, LLC.		**Total Check Amount:**	**$1,995.00**
V45174	RUSSELL SIGLER INC.	07/23/2021	21638	490515151	HVAC PARTS	$56.64
			RUSSELL SIGLER INC.		**Total Check Amount:**	**$56.64**
V45175	SERGIO SARMIENTO	07/23/2021	31076	110404145	JUNIOR GOLF	$450.00
			SERGIO SARMIENTO		**Total Check Amount:**	**$450.00**
V45176	SITEONE LANDSCAPE SUPPLY, LLC	07/23/2021	25942	110515143	IRRIGATION PARTS	$452.96
		07/23/2021	25942	110515141	IRRIGATION PARTS	$148.76
		07/23/2021	25942	110515141	TOOL	$30.15
		07/23/2021	25942	110515144	TOOLS	$69.02
		07/23/2021	25942	341515112	IRRIGATION PARTS	$100.85
		07/23/2021	25942	110515144	IRRIGATION PARTS	$232.96
			SITEONE LANDSCAPE SUPPLY, LLC		**Total Check Amount:**	**$1,034.70**
V45177	SKYHAWKS SPORTS ACADEMY, INC.	07/23/2021	18097	110404145	BASKETBALL CAMP	$1,379.50
			SKYHAWKS SPORTS ACADEMY, INC.		**Total Check Amount:**	**$1,379.50**
V45178	SOUTH COAST EMERGENCY VEHICLE SVC	07/23/2021	18619	480515161	CAB LATCH	$563.66
			SOUTH COAST EMERGENCY VEHICLE SVC		**Total Check Amount:**	**$563.66**
V45179	SPICERS PAPER, INC.	07/23/2021	18883	110141441	PAPER	$1,594.70
			SPICERS PAPER, INC.		**Total Check Amount:**	**$1,594.70**
V45180	STAPLES TECHNOLOGY SOLUTIONS	07/23/2021	22888	110212111	TONER (2)	$184.75
			STAPLES TECHNOLOGY SOLUTIONS		**Total Check Amount:**	**$184.75**
V45181	SUPERIOR ALARM SYSTEMS	07/23/2021	11074	110404211	BCC FIRE/SEC ALARM	$210.00
			SUPERIOR ALARM SYSTEMS		**Total Check Amount:**	**$210.00**
V45182	SWANK MOTION PICTURES, INC.	07/23/2021	10080	110404421	2021 FAMILY FILMS DVD	$870.00
			SWANK MOTION PICTURES, INC.		**Total Check Amount:**	**$870.00**
V45183	THOMSON REUTERS - WEST	07/23/2021	22020	110111112	LEGAL BOOKS/SBSCRPTN	$1,061.48
		07/23/2021	22020	110212121	WEST INFO CHGS JUN21	$455.35
			THOMSON REUTERS - WEST		**Total Check Amount:**	**$1,516.83**
V45184	TROPICAL PLAZA NURSERY, INC	07/23/2021	2062	345515112	REV MD#5 LNDSCP JAN21	($2,597.00)
		07/23/2021	2062	420515131	CITY RESERVOIRS JUN21	$1,583.00
		07/23/2021	2062	880515113	GATEWAY CTR 321171JUN	$1,370.00
		07/23/2021	2062	345515112	CORR:MD5 LNDSCP JAN21	$2,597.00
		07/23/2021	2062	345515112	MD#5 LANDSCAPE JUN21	$2,597.00
		07/23/2021	2062	345515112	REVERSE MAY21 GATEWAY	($1,370.00)
		07/23/2021	2062	880515113	GATEWAY MAY21 #321171	$1,370.00
			TROPICAL PLAZA NURSERY, INC		**Total Check Amount:**	**$5,550.00**
V45185	TURBO DATA SYSTEMS, INC.	07/23/2021	1472	110212122	CITATION PROC JUN21	$424.76
		07/23/2021	1472	110212122	HH LEASE TPM JUN 2021	$193.95
			TURBO DATA SYSTEMS, INC.		**Total Check Amount:**	**$618.71**

City Disbursement Register

Between Jul 19, 2021 12:00 AM and Jul 23, 2021 11:59 PM

Check #	Vendor Name	Check Date	Vendor #	Budget Unit	Description	Amount
V45186	VALVERDE CONSTRUCTION, INC.	07/23/2021	14201	430515123	REM ROOTS:SWR MNHOLE	$930.12
			VALVERDE CONSTRUCTION, INC.		**Total Check Amount:**	**$930.12**
V45187	VINTAGE CANYON SENIOR APARTMENTS	07/23/2021	29395	270323218	SENIOR SUBSIDY AUG21	$762.00
			VINTAGE CANYON SENIOR APARTMENTS		**Total Check Amount:**	**$762.00**
V45188	VIRTUAL PROJECT MANAGER	07/23/2021	23508	510707430	CIP SW BCKUP/ST JUN21	$40.00
		07/23/2021	23508	510707464	CIP SW BCKUP/ST JUN21	$40.00
		07/23/2021	23508	510707251	CIP SW BCKUP/ST JUN21	$100.00
		07/23/2021	23508	510707278	CIP SW BCKUP/ST JUN21	$40.00
		07/23/2021	23508	510707460	CIP SW BCKUP/ST JUN21	$40.00
		07/23/2021	23508	510707323	CIP SW BCKUP/ST JUN21	$40.00
		07/23/2021	23508	510707453	CIP SW BCKUP/ST JUN21	$40.00
		07/23/2021	23508	510707457	CIP SW BCKUP/ST JUN21	$40.00
		07/23/2021	23508	510707458	CIP SW BCKUP/ST JUN21	$40.00
		07/23/2021	23508	510707311	CIP SW BCKUP/ST JUN21	$40.00
		07/23/2021	23508	510707459	CIP SW BCKUP/ST JUN21	$40.00
			VIRTUAL PROJECT MANAGER		**Total Check Amount:**	**$500.00**
V45189	WALTERS WHOLESALE ELECTRIC	07/23/2021	1667	490515151	SS TIES	$40.62
		07/23/2021	1667	490515151	ZIP TIES	$11.12
			WALTERS WHOLESALE ELECTRIC		**Total Check Amount:**	**$51.74**
V45190	WEST COAST ARBORISTS, INC.	07/23/2021	1556	110515142	STUMP REMOVAL 6/16-30	$175.84
		07/23/2021	1556	465515149	EMERG TREE REMOVAL	$2,323.20
		07/23/2021	1556	110515142	TREE TRIMMING 6/1-15	$992.93
		07/23/2021	1556	110515142	TRIM/REM TREES 6/1-15	$4,671.51
		07/23/2021	1556	341515112	TRIMMING 6/1-15	$3,530.40
			WEST COAST ARBORISTS, INC.		**Total Check Amount:**	**$11,693.88**
V45191	WILLDAN ENGINEERING	07/23/2021	12445	510707311	INSP SVCS THRU 5/28	$1,171.07
		07/23/2021	12445	510707464	INSP SVCS THRU 5/28	$549.72
		07/23/2021	12445	510707453	INSP SVCS THRU 5/28	$669.21
			WILLDAN ENGINEERING		**Total Check Amount:**	**$2,390.00**
V45192	ZOLL MEDICAL CORPORATION	07/23/2021	23538	174222222	PM SUPPLIES FS#1	$1,008.54
			ZOLL MEDICAL CORPORATION		**Total Check Amount:**	**$1,008.54**
					Voucher Subtotal	**$352,000.33**

TOTAL **$929,766.08**

City Disbursement Register

Between Jul 26, 2021 12:00 AM and Jul 30, 2021 11:59 PM

Check #	Vendor Name	Check Date	Vendor #	Budget Unit	Description	Amount
188267	AON RISK INSURANCE SVCS WEST, INC.	07/30/2021	26311	470141483	I08867306006EXCESSDIC	$60,717.20
		07/30/2021	26311	470141483	W1BCFD210601 EARTHQKE	$111,576.08
		07/30/2021	26311	470141483	ESP100072002	$59,917.01
		AON RISK INSURANCE SVCS WEST, INC.			**Total Check Amount:**	**$232,210.29**
188268	BERGELECTRIC CORPORATION	07/30/2021	17743	440515126	BREACRK TROUBLESHOOT	$315.00
		BERGELECTRIC CORPORATION			**Total Check Amount:**	**$315.00**
188269	CALIFORNIA PROFESSIONAL ENGINEERING	07/30/2021	22930	420000000	CLOSED WATER ACCOUNT	$2,551.60
		CALIFORNIA PROFESSIONAL ENGINEERING			**Total Check Amount:**	**$2,551.60**
188270	CARNEY MEHR	07/30/2021	28329	950000000	ILJAOC LGL SVCS JUN21	$206.40
		CARNEY MEHR			**Total Check Amount:**	**$206.40**
188271	CITY OF BREA - WATER DEPT	07/30/2021	2039	346515112	WATER 5/6-6/7/21 BAL	$384.80
		CITY OF BREA - WATER DEPT			**Total Check Amount:**	**$384.80**
188272	CIVILTEC ENGINEERING INC.	07/30/2021	2581	510707459	WTRMN REPL JULY 2020	$1,941.25
		07/30/2021	2581	510707460	WTRMN REPL OCT 2020	$2,421.25
		CIVILTEC ENGINEERING INC.			**Total Check Amount:**	**$4,362.50**
188273	COMMERCIAL AQUATIC SERVICES, INC.	07/30/2021	25513	110404422	POOL CHEMICALS	$273.97
		07/30/2021	25513	110404422	BULK ACID	$380.75
		COMMERCIAL AQUATIC SERVICES, INC.			**Total Check Amount:**	**$654.72**
188274	COSCO FIRE PROTECTION, INC.	07/30/2021	29067	110515125	FIRE EXT SVC @ DT PS	$280.00
		COSCO FIRE PROTECTION, INC.			**Total Check Amount:**	**$280.00**
188275	COUNTY OF ORANGE	07/30/2021	4799	110212122	PRKNG CITATIONS JUN21	$1,289.00
		COUNTY OF ORANGE			**Total Check Amount:**	**$1,289.00**
188276	COUNTY OF ORANGE	07/30/2021	4799	110212122	AFIS FEES JULY 2021	$1,785.00
		COUNTY OF ORANGE			**Total Check Amount:**	**$1,785.00**
188277	COUNTY OF ORANGE	07/30/2021	4799	110212122	CLETS SUPPORT JUL21	$1,104.51
		COUNTY OF ORANGE			**Total Check Amount:**	**$1,104.51**
188278	COUNTY OF ORANGE	07/30/2021	4799	510707453	FE19-0206 JAN 2021	$267.46
		COUNTY OF ORANGE			**Total Check Amount:**	**$267.46**
188279	DELTA DENTAL INSURANCE COMPANY	07/30/2021	26074	110	05-79395 DNTL HMO AUG	$2,255.84
		DELTA DENTAL INSURANCE COMPANY			**Total Check Amount:**	**$2,255.84**
188280	DOUG MARTIN CONTRACTING INC	07/30/2021	4512	420000000	CLOSED WATER ACCOUNT	$2,455.09
		DOUG MARTIN CONTRACTING INC			**Total Check Amount:**	**$2,455.09**
188281	SOUTHERN CALIFORNIA EDISON	07/30/2021	3343	110515143	ELECTRICITY JULY 2021	$31.70
		07/30/2021	3343	110515148	ELECTRICITY JULY 2021	$38.99
		07/30/2021	3343	110515121	ELECTRICITY JULY 2021	$912.54
		SOUTHERN CALIFORNIA EDISON			**Total Check Amount:**	**$983.23**
188282	ENCHANTED CHARACTERS	07/30/2021	28626	110404421	FAMILY FILM 7/23/21	$240.00
		ENCHANTED CHARACTERS			**Total Check Amount:**	**$240.00**

City Disbursement Register

Between Jul 26, 2021 12:00 AM and Jul 30, 2021 11:59 PM

Check #	Vendor Name	Check Date	Vendor #	Budget Unit	Description	Amount
188283	G & G TROPHY CO.	07/30/2021	1709	110404424	YOUTH SPORTS MEDALS	$913.18
			G & G TROPHY CO.		**Total Check Amount:**	**$913.18**
188284	THE GAS COMPANY	07/30/2021	3749	490515151	GAS JULY 2021	$151.42
		07/30/2021	3749	490515151	GAS JUNE 2021	$62.70
			THE GAS COMPANY		**Total Check Amount:**	**$214.12**
188285	WILLIAM D. HALE	07/30/2021	26996	110404542	CONCERTS 2021 8/4	$1,100.00
			WILLIAM D. HALE		**Total Check Amount:**	**$1,100.00**
188286	IMPERIAL CAR WASH	07/30/2021	30976	480515161	CARWASHES (5)	$69.95
			IMPERIAL CAR WASH		**Total Check Amount:**	**$69.95**
188287	INLAND WATER WORKS SUPPLY CO	07/30/2021	23904	420515131	ERT'S FOR METERS	$24,204.96
			INLAND WATER WORKS SUPPLY CO		**Total Check Amount:**	**$24,204.96**
188288	INTELLI-TECH	07/30/2021	8774	475141471	HP LED MONITOR	$2,506.70
			INTELLI-TECH		**Total Check Amount:**	**$2,506.70**
188289	INTIME SOLUTIONS INC.	07/30/2021	20876	950000000	ILJAOC ISE TEXT JUN21	$4,956.40
			INTIME SOLUTIONS INC.		**Total Check Amount:**	**$4,956.40**
188290	M. ARTHUR GENSLER, JR. & ASSOCIATES	07/30/2021	28450	110323231	DESIGN SVCS THRU 4/24	$3,155.00
			M. ARTHUR GENSLER, JR. & ASSOCIATES		**Total Check Amount:**	**$3,155.00**
188291	MAGIC CARPET, INC.	07/30/2021	8127	490515151	COVE BASE & ADHESIVE	$655.29
		07/30/2021	8127	490515151	COVE BASE C&M CCC	$321.10
			MAGIC CARPET, INC.		**Total Check Amount:**	**$976.39**
188292	DANIEL NARVAEZ	07/30/2021	25920	110	CS-BCC REFUND COVID19	$10.00
			DANIEL NARVAEZ		**Total Check Amount:**	**$10.00**
188293	PAUL PIERCE	07/30/2021	28462	420000000	REISSUE:CLSD WTR ACCT	$304.28
			PAUL PIERCE		**Total Check Amount:**	**$304.28**
188294	PRETTY KILLER, INC.	07/30/2021	31259	110404542	CONCERTS 2021 8/11	$1,800.00
			PRETTY KILLER, INC.		**Total Check Amount:**	**$1,800.00**
188295	PRINGLES DRAPERIES & BLINDS	07/30/2021	9082	490515151	BLINDS REPAIR @PD ADM	$35.00
			PRINGLES DRAPERIES & BLINDS		**Total Check Amount:**	**$35.00**
188296	RUBBERIZED CRACKFILLER SEALANT, INC	07/30/2021	28516	510707312	ST CRACK SEALING 7/3	$6,500.00
			RUBBERIZED CRACKFILLER SEALANT, INC		**Total Check Amount:**	**$6,500.00**
188297	SOCIAL SOLUTIONS GLOBAL, INC.	07/30/2021	26322	110404523	COUNSELING PROG DBASE	$1,916.85
			SOCIAL SOLUTIONS GLOBAL, INC.		**Total Check Amount:**	**$1,916.85**
188298	STEPHEN DORECK EQUIPMENT	07/30/2021	20478	420000000	CLOSED WATER ACCOUNT	$2,301.60
			STEPHEN DORECK EQUIPMENT		**Total Check Amount:**	**$2,301.60**
188299	U.S. POSTAL SERVICE	07/30/2021	19260	110141441	ANNUALFEE PO BOX 2202	$1,260.00
			U.S. POSTAL SERVICE		**Total Check Amount:**	**$1,260.00**
188300	UNIFIRST CORPORATION	07/30/2021	27988	110212131	PD LAUNDRY SVCS 7/12	$24.88

City Disbursement Register

Between Jul 26, 2021 12:00 AM and Jul 30, 2021 11:59 PM

Check #	Vendor Name	Check Date	Vendor #	Budget Unit	Description	Amount
			UNIFIRST CORPORATION		**Total Check Amount:**	**$24.88**
188301	UNITED PARCEL SERVICE	07/30/2021	3174	110141441	SHIPPING CHGS JUN/JUL	$83.60
			UNITED PARCEL SERVICE		**Total Check Amount:**	**$83.60**
188302	UNITED RENTALS NORTHWEST, INC.	07/30/2021	7051	510707923	PORTABLE RR/SINK @FS1	$324.66
			UNITED RENTALS NORTHWEST, INC.		**Total Check Amount:**	**$324.66**
188303	VENTURE SYSTEM GROUP INC	07/30/2021	29477	475141471	FASTCAM FO CONNECTORS	$312.00
			VENTURE SYSTEM GROUP INC		**Total Check Amount:**	**$312.00**
188304	KELLY WALKER	07/30/2021	19627	110000000	STARTUP CASH BREAFEST	$3,000.00
			KELLY WALKER		**Total Check Amount:**	**$3,000.00**
188305	WESTERN AUDIO VISUAL	07/30/2021	24433	110111153	CABLECAST LIVE SERVER	$5,418.99
		07/30/2021	24433	110111152	CABLECAST LIVE SERVER	$1,784.34
			WESTERN AUDIO VISUAL		**Total Check Amount:**	**$7,203.33**
188306	CHI-CHENG WU	07/30/2021	28478	420000000	CLOSED WATER ACCOUNT	$53.55
			CHI-CHENG WU		**Total Check Amount:**	**$53.55**
188307	XEROX CORPORATION	07/30/2021	3349	110141441	TRMR/FOLDR SW MNT JUN	$116.00
		07/30/2021	3349	110141441	EQ PROTECTION JUN21	$24.89
		07/30/2021	3349	110141441	HISPEED PRNTR/CPR JUN	$717.42
		07/30/2021	3349	110141441	SUPPLIES	$216.88
		07/30/2021	3349	110141441	UDIRECTS MNT JUN21	$119.07
		07/30/2021	3349	110141441	PRINT CHARGES:JUN21	$1,365.48
		07/30/2021	3349	110141441	PROD CLRCPR/PRNTR JUN	$546.38
		07/30/2021	3349	110141441	BLACK CPR/PRNTR JUN21	$468.65
		07/30/2021	3349	110141441	EQ PROTECTION JUN21	$39.43
		07/30/2021	3349	110141441	HI PERF COLOR CPR JUN	$202.24
		07/30/2021	3349	110141441	PRINT CHARGES:JUM21	$582.27
			XEROX CORPORATION		**Total Check Amount:**	**$4,398.71**
					Check Subtotal	**$318,970.60**
V45193	THE ADVANTAGE GROUP	07/30/2021	24539	110141481	FLEX PROC/ADMIN JUN21	$441.50
			THE ADVANTAGE GROUP		**Total Check Amount:**	**$441.50**
V45194	ROGER AIELLI	07/30/2021	31021	110404424	SOFTBALL UMPIRE FEES	$340.00
			ROGER AIELLI		**Total Check Amount:**	**$340.00**
V45195	BEN'S ASPHALT, INC..	07/30/2021	1808	110515121	ASPHALT RPRS MAY 2021	$32,689.40
		07/30/2021	1808	510707442	MAIN WTRLN RPR MAY21	$15,496.80
			BEN'S ASPHALT, INC..		**Total Check Amount:**	**$48,186.20**
V45196	BEST LAWN MOWER SERVICE	07/30/2021	16230	480515161	CHAINS	$64.92
		07/30/2021	16230	480515161	STIHL BLADES	$137.47
			BEST LAWN MOWER SERVICE		**Total Check Amount:**	**$202.39**

City Disbursement Register

Between Jul 26, 2021 12:00 AM and Jul 30, 2021 11:59 PM

Check #	Vendor Name	Check Date	Vendor #	Budget Unit	Description	Amount
V45197	BREA DISPOSAL, INC	07/30/2021	3330	440515122	JUN 2021 RES TONNAGE	$71,975.59
			BREA DISPOSAL, INC		**Total Check Amount:**	**$71,975.59**
V45198	BREA KOREA SISTER CITY ASSOC	07/30/2021	23758	110404311	FY21/22 BKSCA FUNDING	$2,000.00
			BREA KOREA SISTER CITY ASSOC		**Total Check Amount:**	**$2,000.00**
V45199	BREA/ORANGE COUNTY PLUMBING	07/30/2021	3781	490515151	VENT PIPE REPAIR @FS1	$663.54
			BREA/ORANGE COUNTY PLUMBING		**Total Check Amount:**	**$663.54**
V45200	C. WELLS PIPELINE MATERIALS INC	07/30/2021	13055	420515131	PLUMBING SUPPLIES	$4,547.05
			C. WELLS PIPELINE MATERIALS INC		**Total Check Amount:**	**$4,547.05**
V45201	CANNINGS ACE HARDWARE	07/30/2021	15828	480515161	SHOP SUPPLIES	$140.65
			CANNINGS ACE HARDWARE		**Total Check Amount:**	**$140.65**
V45202	CANON SOLUTIONS AMERICA, INC	07/30/2021	15260	110141441	3056 BCC JUL21	$87.17
		07/30/2021	15260	110141441	3124 PD INV JUL21	$77.30
		07/30/2021	15260	110141441	3054 PW JUL21	$87.17
		07/30/2021	15260	110141441	3118 PD REC 2 JUL21	$77.30
		07/30/2021	15260	110141441	5327 FIRE ADM JUL21	$85.61
		07/30/2021	15260	110141441	3047SR CTR JUL21	$77.30
		07/30/2021	15260	110141441	6569 COMM DEV JUL21	$143.66
		07/30/2021	15260	110141441	2714 ADM SVCS JUL21	$101.34
		07/30/2021	15260	110141441	3035 PD DISP JUL21	$85.19
		07/30/2021	15260	110141441	3110 PD REC 1 JUL21	$77.30
		07/30/2021	15260	110141441	3142 MGMT SVCS JUL21	$87.17
		07/30/2021	15260	110141441	5154 PD P/E JUL21	$85.61
		07/30/2021	15260	110141441	PRINT CHARGES:JUN21	$477.84
			CANON SOLUTIONS AMERICA, INC		**Total Check Amount:**	**$1,549.96**
V45203	CIVICPLUS	07/30/2021	23925	110111151	214653 BAL CITY MKTG	$3,330.00
			CIVICPLUS		**Total Check Amount:**	**$3,330.00**
V45204	CORE & MAIN LP	07/30/2021	27049	420515131	WATER METERS+ENCODERS	$9,219.36
		07/30/2021	27049	420515131	WATER METER ENCODERS	$5,882.42
			CORE & MAIN LP		**Total Check Amount:**	**$15,101.78**
V45205	DEEPNET SECURITY LTD	07/30/2021	30002	475141471	DUALSHIELD SUPP 21/22	$3,704.00
			DEEPNET SECURITY LTD		**Total Check Amount:**	**$3,704.00**
V45206	DESTINATION SCIENCE	07/30/2021	31217	110404145	STARSHP EXPLORRS CAMP	$1,333.85
			DESTINATION SCIENCE		**Total Check Amount:**	**$1,333.85**
V45207	ELLIOT AUTO SUPPLY CO., INC.	07/30/2021	3504	480515161	BATTERIES	$1,026.01
		07/30/2021	3504	480515161	CREDIT:BATTERY CORES	($107.75)
		07/30/2021	3504	480515161	WIPER BLADES	$318.08
		07/30/2021	3504	480515161	CREDIT TO #12-4036655	($126.12)

City Disbursement Register

Between Jul 26, 2021 12:00 AM and Jul 30, 2021 11:59 PM

Check #	Vendor Name	Check Date	Vendor #	Budget Unit	Description	Amount
V45207	ELLIOT AUTO SUPPLY CO., INC.	07/30/2021	3504	480515161	OILS	$38.36
		07/30/2021	3504	480515161	SPARK PLUGS	$111.80
			ELLIOT AUTO SUPPLY CO., INC.		**Total Check Amount:**	**$1,260.38**
V45208	ENTENMANN ROVIN COMPANY	07/30/2021	3457	110212111	BADGES	$83.50
			ENTENMANN ROVIN COMPANY		**Total Check Amount:**	**$83.50**
V45209	FIX AUTO LA HABRA	07/30/2021	28720	480515161	AUTOBODY REPAIR #993	$1,123.20
		07/30/2021	28720	480515161	AUTOBODY REPAIR #993	$2,618.88
			FIX AUTO LA HABRA		**Total Check Amount:**	**$3,742.08**
V45210	FLEET SERVICES	07/30/2021	5658	480515161	FANS/LAMP/VLV PR PROT	$268.40
			FLEET SERVICES		**Total Check Amount:**	**$268.40**
V45211	FORENSIC LOGIC, LLC	07/30/2021	27848	950000000	ILJAOC COPLINK TO PO	($177,746.00)
		07/30/2021	27848	950000000	ILJAOC 20/21 COPLINK	$177,746.00
		07/30/2021	27848	950000000	ILJAOC 21/22 COPLINK	$186,634.00
			FORENSIC LOGIC, LLC		**Total Check Amount:**	**$186,634.00**
V45212	GLASBY MAINTENANCE SUPPLY CO	07/30/2021	6802	911515151	CR:INV316889A WIPES	($187.49)
		07/30/2021	6802	911515151	COVID19 WIPES	$232.74
			GLASBY MAINTENANCE SUPPLY CO		**Total Check Amount:**	**$45.25**
V45213	RAY GONZALEZ	07/30/2021	31019	110404424	UMPIRE FEES 7/19/21	$102.00
			RAY GONZALEZ		**Total Check Amount:**	**$102.00**
V45214	GRAINGER	07/30/2021	13634	480515161	SPRAY GUN/EXTENSION	$86.82
			GRAINGER		**Total Check Amount:**	**$86.82**
V45215	HAAKER EQUIPMENT CO.	07/30/2021	4297	480515161	COUPLERS	$80.97
		07/30/2021	4297	480515161	WATER HAND GUN	$196.99
			HAAKER EQUIPMENT CO.		**Total Check Amount:**	**$277.96**
V45216	GABRIEL HANNAH	07/30/2021	17533	110404424	UMPIRE FEES 7/19/21	$102.00
			GABRIEL HANNAH		**Total Check Amount:**	**$102.00**
V45217	CHRISTOPHER M HARVEY	07/30/2021	10364	110212111	TRAINING EXPENSES	$16.00
			CHRISTOPHER M HARVEY		**Total Check Amount:**	**$16.00**
V45218	INFOSEND, INC.	07/30/2021	19016	110404523	INSERT:FAM COUNSELING	$52.36
		07/30/2021	19016	420141421	WATER:JUN21 PRNT/MAIL	$1,438.83
		07/30/2021	19016	110404215	INSERT:FITNESS	$52.36
		07/30/2021	19016	110404421	INSERT:COUNTRY FAIR	$52.36
		07/30/2021	19016	110111151	INSERT:FIREWORKS	$52.35
		07/30/2021	19016	110323231	INSERT:PARKNG PERMITS	$52.36
		07/30/2021	19016	110404521	INSERT:SENIOR CENTER	$52.36
		07/30/2021	19016	420141421	WATER:JUN21 POSTAGE	$4,216.40
			INFOSEND, INC.		**Total Check Amount:**	**$5,969.38**
V45219	INK LINK INC	07/30/2021	22423	110404421	BREAFEST DATE PATCHES	$116.89

City Disbursement Register

Between Jul 26, 2021 12:00 AM and Jul 30, 2021 11:59 PM

Check #	Vendor Name	Check Date	Vendor #	Budget Unit	Description	Amount
			INK LINK INC		**Total Check Amount:**	**$116.89**
V45220	JAX AUTO	07/30/2021	20187	480515161	SMOG TEST	$58.00
			JAX AUTO		**Total Check Amount:**	**$58.00**
V45221	KELLY PAPER	07/30/2021	7039	490515151	SUPPLIES-REPROGRAPHCS	$197.41
			KELLY PAPER		**Total Check Amount:**	**$197.41**
V45222	KIMBALL MIDWEST	07/30/2021	23053	480515161	NUTS/BOLTS	$365.49
			KIMBALL MIDWEST		**Total Check Amount:**	**$365.49**
V45223	RYAN JOSEPH KLUG	07/30/2021	29363	110212111	TRAINING EXPENSES	$40.00
			RYAN JOSEPH KLUG		**Total Check Amount:**	**$40.00**
V45224	KRONOS INCORPORATED	07/30/2021	22688	110222223	IVR SVC JUNE 2021	$11.70
			KRONOS INCORPORATED		**Total Check Amount:**	**$11.70**
V45225	LEHR	07/30/2021	26035	480515161	LIGHTS	$153.54
			LEHR		**Total Check Amount:**	**$153.54**
V45226	LIBERTY FLAGS INC.	07/30/2021	5457	490	TAX ON FLAGS	($145.02)
		07/30/2021	5457	490515151	FLAGS	$2,016.22
			LIBERTY FLAGS INC.		**Total Check Amount:**	**$1,871.20**
V45227	LIFE-ASSIST, INC.	07/30/2021	10530	174222222	PM SUPPLIES FS2	$128.11
			LIFE-ASSIST, INC.		**Total Check Amount:**	**$128.11**
V45228	MAD SCIENCE	07/30/2021	5399	110404145	SLIME-Y CONCOCTIONS	$2,200.00
			MAD SCIENCE		**Total Check Amount:**	**$2,200.00**
V45229	MADISON RAE MAHER	07/30/2021	30612	110212111	TRAINING MILEAGE	$198.80
			MADISON RAE MAHER		**Total Check Amount:**	**$198.80**
V45230	OPENGOV, INC.	07/30/2021	25588	110141411	21/22 MGMT REPORTING	$9,000.00
			OPENGOV, INC.		**Total Check Amount:**	**$9,000.00**
V45231	PETE'S ROAD SERVICE, INC.	07/30/2021	3734	480515161	TRACTOR FRONT TIRES	$1,122.76
			PETE'S ROAD SERVICE, INC.		**Total Check Amount:**	**$1,122.76**
V45232	PLACEWORKS, INC.	07/30/2021	26720	840141412	BREA MALL CEQA JUN21	$36.41
		07/30/2021	26720	84032323E	BR PL ACOUST ANALYSIS	$8,587.50
		07/30/2021	26720	84032323E	BREAPLZ/HOTEL EIR JUN	$33,815.38
		07/30/2021	26720	840141412	BR PL ACOUST ANALYSIS	$258.11
		07/30/2021	26720	840141412	BREAPLZ/HOTEL EIR JUN	$419.38
		07/30/2021	26720	84032323E	BREA MALL CEQA JUN21	$2,615.58
			PLACEWORKS, INC.		**Total Check Amount:**	**$45,732.36**
V45233	PLUMBERS DEPOT INC.	07/30/2021	14542	480515161	PUMP PARTS	$624.22
			PLUMBERS DEPOT INC.		**Total Check Amount:**	**$624.22**
V45234	PLUMBING WHOLESALE OUTLET, INC.	07/30/2021	18392	420515131	PLUMBING SUPPLIES	$164.92
			PLUMBING WHOLESALE OUTLET, INC.		**Total Check Amount:**	**$164.92**
V45235	RICHARDS, WATSON & GERSHON	07/30/2021	8978	420515131	9999 GEN LGL SVCS MAY	$46.00

City Disbursement Register

Between Jul 26, 2021 12:00 AM and Jul 30, 2021 11:59 PM

Check #	Vendor Name	Check Date	Vendor #	Budget Unit	Description	Amount
V45235	RICHARDS, WATSON & GERSHON	07/30/2021	8978	110515171	189 LUCAS BLDRS JUN21	$5,756.00
		07/30/2021	8978	420515131	0001 GEN LGL SVCS MAY	$1,178.00
		07/30/2021	8978	911111112	197 COVID19 EMERG JUN	$836.00
		07/30/2021	8978	840141412	195 REVERSAL MAY21	($25,790.00)
		07/30/2021	8978	840141412	195 SAFER AVENUE MAY	$25,790.00
		07/30/2021	8978	110111112	0001 GEN LGL SVCS MAY	$10,329.59
		07/30/2021	8978	110111112	9999 GEN LGL SVCS MAY	$3,892.00
		RICHARDS, WATSON & GERSHON			**Total Check Amount:**	**$22,037.59**
V45236	SC FUELS	07/30/2021	16654	480515161	REG UNL ETH 4366 GALS	$15,763.21
		SC FUELS			**Total Check Amount:**	**$15,763.21**
V45237	TENNIS ANYONE ACADEMY	07/30/2021	12688	110404145	TENNIS LESSONS	$5,083.20
		TENNIS ANYONE ACADEMY			**Total Check Amount:**	**$5,083.20**
V45238	TYLER TECHNOLOGIES, INC.	07/30/2021	25937	951	ILJAOC ZEBRA PRINTER	$9,309.60
		TYLER TECHNOLOGIES, INC.			**Total Check Amount:**	**$9,309.60**
V45239	WEST COAST SAND & GRAVEL, INC.	07/30/2021	11519	420515131	AGGREGATE BASE	$644.35
		07/30/2021	11519	420515131	SAND	$404.96
		WEST COAST SAND & GRAVEL, INC.			**Total Check Amount:**	**$1,049.31**
V45240	WILLDAN ENGINEERING	07/30/2021	12445	510707321	INSP SVCS OCT 2020	$5,568.76
		07/30/2021	12445	510707320	INSP SVCS OCT 2020	$4,893.76
		07/30/2021	12445	510707319	INSP SVCS OCT 2020	$5,545.48
		WILLDAN ENGINEERING			**Total Check Amount:**	**$16,008.00**
V45241	SARA L. WOODWARD	07/30/2021	26083	110212122	JUNE 2021 MILEAGE	$101.02
		SARA L. WOODWARD			**Total Check Amount:**	**$101.02**
V45242	YOUNG REMBRANDTS	07/30/2021	15831	110404145	ELEM/CARTOON DRAWING	$378.00
		YOUNG REMBRANDTS			**Total Check Amount:**	**$378.00**
					Voucher Subtotal	**$483,819.61**

TOTAL **$802,790.21**

City Disbursement Register

Between Aug 2, 2021 12:00 AM and Aug 6, 2021 11:59 PM

Check #	Vendor Name	Check Date	Vendor #	Budget Unit	Description	Amount
188308	AGA ENGINEERS, INC	08/06/2021	30567	510707709	BIRCH ST TSSP JUN21	$2,920.00
		08/06/2021	30567	510707251	FIBER OPTC COMM JUN21	$2,405.00
			AGA ENGINEERS, INC		**Total Check Amount:**	**$5,325.00**
188309	AKM CONSULTING ENGINEERS	08/06/2021	10006	510707442	WTR MSTRPLN RVW DEC20	$3,186.00
			AKM CONSULTING ENGINEERS		**Total Check Amount:**	**$3,186.00**
188310	AMERICAN GEOTECHNICAL	08/06/2021	30266	110515171	PROF SVCS 4/25-5/29	$983.75
			AMERICAN GEOTECHNICAL		**Total Check Amount:**	**$983.75**
188311	AIMEE J. AUL	08/06/2021	29016	110404541	SUNDAY FUNDAY 6/20	$81.00
			AIMEE J. AUL		**Total Check Amount:**	**$81.00**
188312	AVENU INSIGHTS & ANALYTICS, LLC	08/06/2021	29396	110141424	SUTA 2021 Q1 JAN-MAR	$1,667.67
			AVENU INSIGHTS & ANALYTICS, LLC		**Total Check Amount:**	**$1,667.67**
188313	ARTHUR BIESIADA	08/06/2021	31307	110	CS-BCC REFUND COVID19	$10.00
			ARTHUR BIESIADA		**Total Check Amount:**	**$10.00**
188314	DENNIS BROWN	08/06/2021	31304	110	CS-BCC REFUND COVID19	$20.00
			DENNIS BROWN		**Total Check Amount:**	**$20.00**
188315	DANIEL CHAIDEZ	08/06/2021	31323	110	CS-BCC REFUND COVID19	$10.00
			DANIEL CHAIDEZ		**Total Check Amount:**	**$10.00**
188316	TOM CHANG	08/06/2021	31303	110	CS-BCC REFUND COVID19	$10.00
			TOM CHANG		**Total Check Amount:**	**$10.00**
188317	CITY OF ANAHEIM	08/06/2021	4908	110222211	METRO CTS 20/21 Q4BAL	$41,066.29
			CITY OF ANAHEIM		**Total Check Amount:**	**$41,066.29**
188318	CITY OF BREA - WATER DEPT	08/06/2021	2039	341515112	WATER 6/7-7/7	$3,307.49
		08/06/2021	2039	345515112	WATER 6/7-7/7	$3,469.11
		08/06/2021	2039	346515112	WATER 6/7-7/7	$7,486.50
		08/06/2021	2039	465515149	WATER 6/7-7/7	$50,997.29
		08/06/2021	2039	880515113	WATER 6/7-7/7	$20.11
		08/06/2021	2039	347515112	WATER 6/7-7/7	$571.52
		08/06/2021	2039	343515112	WATER 6/7-7/7	$3,015.04
		08/06/2021	2039	510707609	WATER 6/7-7/7	$8.36
			CITY OF BREA - WATER DEPT		**Total Check Amount:**	**$68,875.42**
188319	CITY OF SANTA ANA	08/06/2021	13773	110212111	CONTROLLING FORCE	$99.00
			CITY OF SANTA ANA		**Total Check Amount:**	**$99.00**
188320	CIVILTEC ENGINEERING INC.	08/06/2021	2581	510707453	CONST SUPP MAY 2021	$146.25
		08/06/2021	2581	510707457	CONST SUPP MAY 2021	$146.25
			CIVILTEC ENGINEERING INC.		**Total Check Amount:**	**$292.50**
188321	ROSALIA COCIS	08/06/2021	31294	420000000	CLOSED WATER ACCOUNT	$143.62
			ROSALIA COCIS		**Total Check Amount:**	**$143.62**
188322	COMMERCIAL AQUATIC SERVICES, INC.	08/06/2021	25513	110404422	CHEMICALS	$245.80

City Disbursement Register

Between Aug 2, 2021 12:00 AM and Aug 6, 2021 11:59 PM

Check #	Vendor Name	Check Date	Vendor #	Budget Unit	Description	Amount
		COMMERCIAL AQUATIC SERVICES, INC.			**Total Check Amount:**	**$245.80**
188323	ZUZANA DEMIANOVA	08/06/2021	31320	110	CS-BCC REFUND COVID19	$10.00
		ZUZANA DEMIANOVA			**Total Check Amount:**	**$10.00**
188324	VICKY DIAL	08/06/2021	25428	420000000	WATER ACCT OVERPYMT	$1,000.00
		VICKY DIAL			**Total Check Amount:**	**$1,000.00**
188325	EAGLE AERIAL IMAGING	08/06/2021	24829	110323212	WALL MAPS/MURAL UPGRD	$1,112.26
		08/06/2021	24829	430515123	WALL MAPS/MURAL UPGRD	$1,639.43
		08/06/2021	24829	110111143	WALL MAPS/MURAL UPGRD	$1,112.26
		08/06/2021	24829	110323231	WALL MAPS/MURAL UPGRD	$2,753.24
		08/06/2021	24829	110404311	WALL MAPS/MURAL UPGRD	$1,112.27
		08/06/2021	24829	420515131	WALL MAPS/MURAL UPGRD	$1,639.43
		08/06/2021	24829	490515151	WALL MAPS/MURAL UPGRD	$1,639.43
		08/06/2021	24829	260515171	WALL MAPS/MURAL UPGRD	$5,014.80
		08/06/2021	24829	110141411	WALL MAPS/MURAL UPGRD	$1,112.26
		08/06/2021	24829	110222231	WALL MAPS/MURAL UPGRD	$2,224.54
		EAGLE AERIAL IMAGING			**Total Check Amount:**	**$19,359.92**
188326	SOUTHERN CALIFORNIA EDISON	08/06/2021	3343	110515121	ELECTRICITY JULY 2021	$1,210.11
		SOUTHERN CALIFORNIA EDISON			**Total Check Amount:**	**$1,210.11**
188327	FC & MK TOMLINSON , LLC	08/06/2021	2550	420515131	CDWC 2021 LEASE 180SH	$91,249.60
		FC & MK TOMLINSON , LLC			**Total Check Amount:**	**$91,249.60**
188328	ELISA FIELD	08/06/2021	31311	420000000	CLOSED WATER ACCOUNT	$75.63
		ELISA FIELD			**Total Check Amount:**	**$75.63**
188329	FIRST AMERICAN DATA TREE, LLC	08/06/2021	31301	475141471	21/22 DATA SOLUTIONS	$3,000.00
		FIRST AMERICAN DATA TREE, LLC			**Total Check Amount:**	**$3,000.00**
188330	FRANCHISE TAX BOARD/ST OF CALIF	08/06/2021	12043	110	571810253 073021 PR	$125.00
		FRANCHISE TAX BOARD/ST OF CALIF			**Total Check Amount:**	**$125.00**
188331	FRANCHISE TAX BOARD/ST OF CALIF	08/06/2021	12043	110	881650582 073021 PR	$751.78
		FRANCHISE TAX BOARD/ST OF CALIF			**Total Check Amount:**	**$751.78**
188332	FRONTIER COMMUNICATIONS	08/06/2021	26183	475141471	5621820146 0716-0815	$54.20
		FRONTIER COMMUNICATIONS			**Total Check Amount:**	**$54.20**
188333	GATEWAY MEDICAL CENTER	08/06/2021	30789	110141481	PHYSICAL EXAMS JUN21	$581.00
		GATEWAY MEDICAL CENTER			**Total Check Amount:**	**$581.00**
188334	GENTRY BROTHERS, INC	08/06/2021	11923	510707323	COUNTRYLN REHAB APR21	$9,690.00
		GENTRY BROTHERS, INC			**Total Check Amount:**	**$9,690.00**
188335	GEORGE & SONS ROOFING	08/06/2021	31313	840000000	DEVELOPER FEE REFUND	$168.00
		GEORGE & SONS ROOFING			**Total Check Amount:**	**$168.00**
188336	GOVERNMENT TRAINING AGENCY	08/06/2021	27548	110212111	ICI MGMT/DET UNITSUPV	$576.00
		GOVERNMENT TRAINING AGENCY			**Total Check Amount:**	**$576.00**

City Disbursement Register

Between Aug 2, 2021 12:00 AM and Aug 6, 2021 11:59 PM

Check #	Vendor Name	Check Date	Vendor #	Budget Unit	Description	Amount
188337	HARRINGTON GEOTECHNICAL ENG.INC.	08/06/2021	15251	510707430	GEOTECH SVCS MAY 2021	$550.00
		08/06/2021	15251	510707278	COMPACTION TEST MAR21	$1,832.50
			HARRINGTON GEOTECHNICAL ENG.INC.		**Total Check Amount:**	**$2,382.50**
188338	EDMOND HO	08/06/2021	31309	420000000	CLOSED WATER ACCOUNT	$93.10
			EDMOND HO		**Total Check Amount:**	**$93.10**
188339	GARRY L HOBDAY	08/06/2021	25175	110404542	PARK CONCERTS MC	$200.00
			GARRY L HOBDAY		**Total Check Amount:**	**$200.00**
188340	JOSH HUNHOFF	08/06/2021	31326	420000000	CLOSED WATER ACCOUNT	$67.35
			JOSH HUNHOFF		**Total Check Amount:**	**$67.35**
188341	KENI JHEUN	08/06/2021	31298	420000000	CLOSED WATER ACCOUNT	$80.79
			KENI JHEUN		**Total Check Amount:**	**$80.79**
188342	SANG KIM	08/06/2021	22215	420000000	CLOSED WATER ACCOUNT	$92.42
			SANG KIM		**Total Check Amount:**	**$92.42**
188343	KOA CORPORATION CBM CONSULTING	08/06/2021	22839	510707453	PROF SVCS JUNE 2021	$10,709.43
		08/06/2021	22839	510707457	PROF SVCS JUNE 2021	$12,825.57
			KOA CORPORATION CBM CONSULTING		**Total Check Amount:**	**$23,535.00**
188344	KOA CORPORATION CBM CONSULTING	08/06/2021	22839	510707453	PROF SVCS MAY 2021	$14,288.34
		08/06/2021	22839	510707457	PROF SVCS MAY 2021	$17,111.66
			KOA CORPORATION CBM CONSULTING		**Total Check Amount:**	**$31,400.00**
188345	YOUNGHWA KWON	08/06/2021	31297	420000000	CLOSED WATER ACCOUNT	$7.63
			YOUNGHWA KWON		**Total Check Amount:**	**$7.63**
188346	JORGE LAMBOY-GONZALEZ	08/06/2021	31315	110	CS-BCC REFUND COVID19	$10.00
			JORGE LAMBOY-GONZALEZ		**Total Check Amount:**	**$10.00**
188347	LAW OFFICES OF JONES & MAYER	08/06/2021	12144	110111112	LEGAL:CODE ENF JUN21	$264.44
			LAW OFFICES OF JONES & MAYER		**Total Check Amount:**	**$264.44**
188348	SONGMENG AND/OR AMBER LI	08/06/2021	31302	110	CS-BCC REFUND COVID19	$40.00
			SONGMENG AND/OR AMBER LI		**Total Check Amount:**	**$40.00**
188349	JANICE LIDDELL	08/06/2021	31296	110404542	HAIRPEACE-PAGE2STAGE	$250.00
			JANICE LIDDELL		**Total Check Amount:**	**$250.00**
188350	LINSCOTT, LAW & GREENSPAN ENGINEERS	08/06/2021	29408	510707251	TFC ENGG SVCS MAY21	$1,110.00
		08/06/2021	29408	510707251	TFC ENGG SVCS MAR21	$1,295.00
			LINSCOTT, LAW & GREENSPAN ENGINEERS		**Total Check Amount:**	**$2,405.00**
188351	DIANE MARTINEZ	08/06/2021	31322	110	CS-BCC REFUND COVID19	$10.00
			DIANE MARTINEZ		**Total Check Amount:**	**$10.00**
188352	MISSION PAVING & SEALING	08/06/2021	31300	420000000	CLOSED WATER ACCOUNT	$2,500.80
			MISSION PAVING & SEALING		**Total Check Amount:**	**$2,500.80**
188353	NATIONAL BUSINESS FURNITURE	08/06/2021	29143	490515151	FIRE DESKS (3)	$2,999.97
			NATIONAL BUSINESS FURNITURE		**Total Check Amount:**	**$2,999.97**

City Disbursement Register

Between Aug 2, 2021 12:00 AM and Aug 6, 2021 11:59 PM

Check #	Vendor Name	Check Date	Vendor #	Budget Unit	Description	Amount
188354	NEILSON CONSTRUCTION	08/06/2021	31324	420000000	CLOSED WATER ACCOUNT	$1,941.16
		NEILSON CONSTRUCTION			**Total Check Amount:**	**$1,941.16**
188355	RENATO NUNES GONCALVES	08/06/2021	31321	110	CS-BCC REFUND COVID19	$20.00
		RENATO NUNES GONCALVES			**Total Check Amount:**	**$20.00**
188356	DOUGLAS O'NEILL	08/06/2021	31305	110	CS-BCC REFUND COVID19	$30.00
		DOUGLAS O'NEILL			**Total Check Amount:**	**$30.00**
188357	ORANGE CTY CHIEFS' & SHERIFFS' ASSN	08/06/2021	1351	110212111	FY 21/22 MEMB DUES	$250.00
		ORANGE CTY CHIEFS' & SHERIFFS' ASSN			**Total Check Amount:**	**$250.00**
188358	JAMES PAIK	08/06/2021	31325	420000000	CLOSED WATER ACCOUNT	$13.48
		JAMES PAIK			**Total Check Amount:**	**$13.48**
188359	PERFORMANCE TRUCK REPAIR, INC.	08/06/2021	29371	480515161	V27008 ENGINE REBUILD	$24,997.31
		PERFORMANCE TRUCK REPAIR, INC.			**Total Check Amount:**	**$24,997.31**
188360	PREMIER FITNESS SERVICE	08/06/2021	31329	110222223	FS3 EQUIPMENT SVC	$576.69
		PREMIER FITNESS SERVICE			**Total Check Amount:**	**$576.69**
188361	PUENTE HILLS FORD	08/06/2021	25742	480515161	INJECTOR KITS	$310.30
		08/06/2021	25742	480515161	WHEEL	$206.67
		08/06/2021	25742	480515161	COILS/SPARK PLUGS	$657.85
		PUENTE HILLS FORD			**Total Check Amount:**	**$1,174.82**
188362	JING QIAN	08/06/2021	31327	420000000	CLOSED WATER ACCOUNT	$12.52
		JING QIAN			**Total Check Amount:**	**$12.52**
188363	BEL-AYRE ROBBINS	08/06/2021	31319	110	CS-BCC REFUND COVID19	$20.00
		BEL-AYRE ROBBINS			**Total Check Amount:**	**$20.00**
188364	SUSAN SAXE-CLIFFORD, PH.D.	08/06/2021	22693	110141481	PSYCH EVALUATIONS (4)	$3,200.00
		SUSAN SAXE-CLIFFORD, PH.D.			**Total Check Amount:**	**$3,200.00**
188365	YING SHA	08/06/2021	31299	420000000	CLOSED WATER ACCOUNT	$75.00
		YING SHA			**Total Check Amount:**	**$75.00**
188366	STEPHEN DORECK EQUIPMENT	08/06/2021	20478	510707430	MOORPARK DR WTR IMP	$24,920.87
		STEPHEN DORECK EQUIPMENT			**Total Check Amount:**	**$24,920.87**
188367	WILLIAM M. TOMLINSON II	08/06/2021	12087	420515131	CDWC 20/21 LEASE 8SH	$4,055.53
		WILLIAM M. TOMLINSON II			**Total Check Amount:**	**$4,055.53**
188368	TS GOVERNMENT SOLUTIONS, LLC	08/06/2021	28596	110404215	QTRLY EQPT PREV MAINT	$1,295.00
		TS GOVERNMENT SOLUTIONS, LLC			**Total Check Amount:**	**$1,295.00**
188369	HEATHER TURNER	08/06/2021	31306	110	CS-BCC REFUND COVID19	$30.00
		HEATHER TURNER			**Total Check Amount:**	**$30.00**
188370	UNIFIRST CORPORATION	08/06/2021	27988	110515125	JACKET 7/19/21	$56.31
		08/06/2021	27988	110212131	PD LAUNDRY SVCS 7/19	$24.88
		08/06/2021	27988	110212131	PD LAUNDRY SVCS 7/26	$24.88
		08/06/2021	27988	490515151	JACKET 7/26/21	$45.26

City Disbursement Register

Between Aug 2, 2021 12:00 AM and Aug 6, 2021 11:59 PM

Check #	Vendor Name	Check Date	Vendor #	Budget Unit	Description	Amount
			UNIFIRST CORPORATION		**Total Check Amount:**	**$151.33**
188371	UNIFIRST CORPORATION	08/06/2021	27988	480515161	UNIFORM SVCS JUL 2021	$142.98
		08/06/2021	27988	110515143	UNIFORM SVCS JUL 2021	$20.04
		08/06/2021	27988	110515148	UNIFORM SVCS JUL 2021	$4.72
		08/06/2021	27988	430515123	UNIFORM SVCS JUL 2021	$41.16
		08/06/2021	27988	110515125	UNIFORM SVCS JUL 2021	$24.60
		08/06/2021	27988	361515148	UNIFORM SVCS JUL 2021	$4.72
		08/06/2021	27988	420515131	UNIFORM SVCS JUL 2021	$97.92
		08/06/2021	27988	440515126	UNIFORM SVCS JUL 2021	$10.68
		08/06/2021	27988	490515151	UNIFORM SVCS JUL 2021	$198.60
		08/06/2021	27988	110515121	UNIFORM SVCS JUL 2021	$41.80
		08/06/2021	27988	110515141	UNIFORM SVCS JUL 2021	$104.91
		08/06/2021	27988	110515144	UNIFORM SVCS JUL 2021	$33.36
		08/06/2021	27988	360515145	UNIFORM SVCS JUL 2021	$41.80
			UNIFIRST CORPORATION		**Total Check Amount:**	**$767.29**
188372	TRISH WATKINS	08/06/2021	31308	420000000	CLOSED WATER ACCOUNT	$92.85
			TRISH WATKINS		**Total Check Amount:**	**$92.85**
188373	WESTERN AUDIO VISUAL	08/06/2021	24433	510707967	YARD SECURITY CAMERA	$7,265.03
		08/06/2021	24433	510707967	RETENTION:YRD SEC CAM	$3,342.70
			WESTERN AUDIO VISUAL		**Total Check Amount:**	**$10,607.73**
188374	JOHN WHISENANT	08/06/2021	31312	420000000	CLOSED WATER ACCOUNT	$53.60
			JOHN WHISENANT		**Total Check Amount:**	**$53.60**
188375	ROBERT WINTER	08/06/2021	31317	110	CS-BCC REFUND COVID19	$10.00
			ROBERT WINTER		**Total Check Amount:**	**$10.00**
188376	TIFFANY WONG	08/06/2021	31318	110	CS-BCC REFUND COVID19	$10.00
			TIFFANY WONG		**Total Check Amount:**	**$10.00**
188377	JESSICA YU	08/06/2021	31316	110	CS-BCC REFUND COVID19	$30.00
			JESSICA YU		**Total Check Amount:**	**$30.00**
188378	KENNETH ZEMBA	08/06/2021	31328	420000000	CLOSED WATER ACCOUNT	$102.48
			KENNETH ZEMBA		**Total Check Amount:**	**$102.48**
188379	YAN ZHU	08/06/2021	31310	420000000	CLOSED WATER ACCOUNT	$110.00
			YAN ZHU		**Total Check Amount:**	**$110.00**
188380	ELIOTT ZIMMERMAN	08/06/2021	31314	110	CS-BCC REFUND COVID19	$10.00
			ELIOTT ZIMMERMAN		**Total Check Amount:**	**$10.00**
					Check Subtotal	**$390,763.95**
V45243	AFLAC-ACCOUNT #EZA73	08/06/2021	22923	110	ACC/CANCER INS JUL21	$1,654.06
			AFLAC-ACCOUNT #EZA73		**Total Check Amount:**	**$1,654.06**

City Disbursement Register

Between Aug 2, 2021 12:00 AM and Aug 6, 2021 11:59 PM

Check #	Vendor Name	Check Date	Vendor #	Budget Unit	Description	Amount
V45244	DAVID J. AGUIRRE	08/06/2021	12388	110212111	TRAINING MILEAGE	$30.24
			DAVID J. AGUIRRE		**Total Check Amount:**	**$30.24**
V45245	ARC DOCUMENT SOLUTIONS	08/06/2021	23645	510707442	BREA CITY IMAGERY MAP	$30.74
			ARC DOCUMENT SOLUTIONS		**Total Check Amount:**	**$30.74**
V45246	AVCOGAS PROPANE SALES & SERVICES	08/06/2021	22047	480515161	PROPANE 650 GALS	$1,589.80
			AVCOGAS PROPANE SALES & SERVICES		**Total Check Amount:**	**$1,589.80**
V45247	B & M LAWN AND GARDEN CENTER	08/06/2021	4699	110222221	CHAIN SAW REPAIRS	$486.00
			B & M LAWN AND GARDEN CENTER		**Total Check Amount:**	**$486.00**
V45248	THE BANK OF NEW YORK MELLON	08/06/2021	16062	930141424	CONTRL ACCT APR-JUN21	$2,887.77
			THE BANK OF NEW YORK MELLON		**Total Check Amount:**	**$2,887.77**
V45249	BEN'S ASPHALT, INC..	08/06/2021	1808	510707442	MAIN WTRLN RPR MAY21	$20,656.19
			BEN'S ASPHALT, INC..		**Total Check Amount:**	**$20,656.19**
V45250	BPSEA MEMORIAL FOUNDATION	08/06/2021	14990	110	DED:4050 MEMORIAL	$177.00
			BPSEA MEMORIAL FOUNDATION		**Total Check Amount:**	**$177.00**
V45251	BREA CITY EMPLOYEES ASSOCIATION	08/06/2021	3236	110	DED:4005 BCEA MEMBR	$540.00
			BREA CITY EMPLOYEES ASSOCIATION		**Total Check Amount:**	**$540.00**
V45252	BUTLER CHEMICALS, INC.	08/06/2021	6515	490515151	SR CTR D/W SVC JUL21	$175.63
			BUTLER CHEMICALS, INC.		**Total Check Amount:**	**$175.63**
V45253	BYRNE SOFTWARE TECHNOLOGIES, INC.	08/06/2021	27471	110323241	ACCELA IMPL 4/10-4/23	$945.00
			BYRNE SOFTWARE TECHNOLOGIES, INC.		**Total Check Amount:**	**$945.00**
V45254	C. WELLS PIPELINE MATERIALS INC	08/06/2021	13055	420515131	PLUMBING SUPPLIES	$4,083.73
		08/06/2021	13055	420515131	TOOLS	$551.68
			C. WELLS PIPELINE MATERIALS INC		**Total Check Amount:**	**$4,635.41**
V45255	CALIF INSURANCE POOL AUTHORITY	08/06/2021	21666	470141483	21/22 WORKERS' COMP	$261,920.00
		08/06/2021	21666	470141483	PROP CONTRIB FY 20/21	$830.02
		08/06/2021	21666	470141483	21/22 BOND/CRIME PREM	$3,325.00
		08/06/2021	21666	470141483	21/22 PROPERTY INS	$247,380.00
		08/06/2021	21666	470141483	21/22 LIABILITY INS	$417,943.00
			CALIF INSURANCE POOL AUTHORITY		**Total Check Amount:**	**$931,398.02**
V45256	CALIFORNIA HEALTH & SAFETY INC.	08/06/2021	15491	110222221	SCBA PARTS	$1,324.09
			CALIFORNIA HEALTH & SAFETY INC.		**Total Check Amount:**	**$1,324.09**
V45257	JAMIE KRISTINE MCDONALD	08/06/2021	23730	110212111	JULY 2021 MILEAGE	$19.49
			JAMIE KRISTINE MCDONALD		**Total Check Amount:**	**$19.49**
V45258	CANNINGS ACE HARDWARE	08/06/2021	15828	480515161	PEN LIGHT/SEALER	$19.47
			CANNINGS ACE HARDWARE		**Total Check Amount:**	**$19.47**
V45259	CANON FINANCIAL SERVICES, INC.	08/06/2021	20648	110141441	PRINT CHARGES:JUN21	$27.27
		08/06/2021	20648	110141441	FS1 COPIER LSE JUL21	$25.32

City Disbursement Register

Between Aug 2, 2021 12:00 AM and Aug 6, 2021 11:59 PM

Check #	Vendor Name	Check Date	Vendor #	Budget Unit	Description	Amount
V45259	CANON FINANCIAL SERVICES, INC.	08/06/2021	20648	110141441	FS3 COPIER LSE JUL21	$25.32
		08/06/2021	20648	110141441	FS4 COPIER LSE JUL21	$25.32
		08/06/2021	20648	110141441	FS2 COPIER LSE JUL21	$25.32
		CANON FINANCIAL SERVICES, INC.			**Total Check Amount:**	**$128.55**
V45260	KELLY M CARPENTER	08/06/2021	8944	110212111	ICI MGMT/DET UNITSUPV	$218.00
		KELLY M CARPENTER			**Total Check Amount:**	**$218.00**
V45261	MIRSA CHAVEZ	08/06/2021	31295	110212111	TRAINING MILEAGE	$15.01
		MIRSA CHAVEZ			**Total Check Amount:**	**$15.01**
V45262	CIGNA BEHAVIORAL HEALTH, INC.	08/06/2021	26628	110141481	EAP SVCS AUGUST 2021	$994.24
		CIGNA BEHAVIORAL HEALTH, INC.			**Total Check Amount:**	**$994.24**
V45263	COLONIAL LIFE PROCESSING CENTER	08/06/2021	26071	110	ACCIDENT INS JUL21	$2,924.24
		08/06/2021	26071	110	LIFE INS JUL21	$589.68
		08/06/2021	26071	110	ST DISAB INS JUL21	$4,624.70
		08/06/2021	26071	110	CANCER INS JUL21	$2,292.04
		08/06/2021	26071	110	CRIT ILLNSS INS JUL21	$971.56
		COLONIAL LIFE PROCESSING CENTER			**Total Check Amount:**	**$11,402.22**
V45264	DANIELS TIRE SERVICE	08/06/2021	3133	480515161	FRONT END ALIGNMENT	$75.37
		08/06/2021	3133	480515161	PW TRUCK TIRES	$397.97
		08/06/2021	3133	480515161	VAN TIRES	$463.79
		DANIELS TIRE SERVICE			**Total Check Amount:**	**$937.13**
V45265	ECONOLITE SYSTEMS, INC.	08/06/2021	27147	110515121	MO. SIGNAL MNT JUN21	$3,116.25
		08/06/2021	27147	110515121	E/O SIGNAL MNT JUN21	$4,407.44
		08/06/2021	27147	110515121	E/O MNT-CAMERA INST	$2,238.39
		08/06/2021	27147	110515121	E/O SGNL MNT-POLE K/O	$2,645.50
		08/06/2021	27147	510707453	CONDUIT REPAIR 6/11	$2,799.96
		ECONOLITE SYSTEMS, INC.			**Total Check Amount:**	**$15,207.54**
V45266	EQUIPMENT DIRECT INC	08/06/2021	4522	480515161	SAFETY GEAR	$50.20
		EQUIPMENT DIRECT INC			**Total Check Amount:**	**$50.20**
V45267	GEORGE HILLS COMPANY	08/06/2021	27340	470141483	CLAIMS MGMT FEE JUL21	$530.42
		GEORGE HILLS COMPANY			**Total Check Amount:**	**$530.42**
V45268	DON GOLDEN	08/06/2021	10729	110000000	INSP SVCS 7/15-7/28	($5,729.75)
		08/06/2021	10729	84032324I	INSP SVCS 7/15-7/28	$16,211.00
		DON GOLDEN			**Total Check Amount:**	**$10,481.25**
V45269	RAY GONZALEZ	08/06/2021	31019	110404424	SOFTBALL UMPIRE FEES	$102.00
		RAY GONZALEZ			**Total Check Amount:**	**$102.00**
V45270	GRAINGER	08/06/2021	13634	110212131	BATTERIES	$274.60
		GRAINGER			**Total Check Amount:**	**$274.60**
V45271	HAAKER EQUIPMENT CO.	08/06/2021	4297	480515161	VACTOR	$98.74

City Disbursement Register

Between Aug 2, 2021 12:00 AM and Aug 6, 2021 11:59 PM

Check #	Vendor Name	Check Date	Vendor #	Budget Unit	Description	Amount
					CONNECTOR/PLUG	
			HAAKER EQUIPMENT CO.		**Total Check Amount:**	**$98.74**
V45272	GABRIEL HANNAH	08/06/2021	17533	110404424	SOFTBALL UMPIRE FEES	$102.00
			GABRIEL HANNAH		**Total Check Amount:**	**$102.00**
V45273	CHRISTOPHER M HARVEY	08/06/2021	10364	110212111	TRAINING EXPENSES	$16.00
			CHRISTOPHER M HARVEY		**Total Check Amount:**	**$16.00**
V45274	HCI SYSTEMS INC	08/06/2021	25112	490515151	5YR FIRE SPRNKLR INSP	$4,640.00
			HCI SYSTEMS INC		**Total Check Amount:**	**$4,640.00**
V45275	HDL SOFTWARE, LLC	08/06/2021	10601	475141471	CODE ENF/PERMIT S/W	$11,804.48
			HDL SOFTWARE, LLC		**Total Check Amount:**	**$11,804.48**
V45276	JMDIAZ, INC.	08/06/2021	27113	510707946	SVCS:TRACKS EXT JUN21	$5,390.62
			JMDIAZ, INC.		**Total Check Amount:**	**$5,390.62**
V45277	KELLY PAPER	08/06/2021	7039	110141441	SUPPLIES	$128.23
		08/06/2021	7039	110141441	PAPER	$415.19
			KELLY PAPER		**Total Check Amount:**	**$543.42**
V45278	KEYSER MARSTON ASSOCIATES, INC.	08/06/2021	25482	840141412	PROF SVCS BR265 JUN21	$945.00
		08/06/2021	25482	840141412	PROF SVCS HOTEL JUN21	$1,080.00
			KEYSER MARSTON ASSOCIATES, INC.		**Total Check Amount:**	**$2,025.00**
V45279	KREUZER CONSULTING GROUP	08/06/2021	22072	510707952	TRKS S3 DRAINAGE RPR	$5,288.00
			KREUZER CONSULTING GROUP		**Total Check Amount:**	**$5,288.00**
V45280	JULIE H. LEE	08/06/2021	29028	110404523	COUNSELING SUPV JUN21	$4,230.00
			JULIE H. LEE		**Total Check Amount:**	**$4,230.00**
V45281	LIEBERT CASSIDY WHITMORE	08/06/2021	2489	470141483	PROF SVCS 00021 JUN21	$115.00
		08/06/2021	2489	470141483	PROF SVCS 00022 JUN21	$798.00
			LIEBERT CASSIDY WHITMORE		**Total Check Amount:**	**$913.00**
V45282	LIFE-ASSIST, INC.	08/06/2021	10530	174222222	PM SUPPLIES FS2	$583.41
			LIFE-ASSIST, INC.		**Total Check Amount:**	**$583.41**
V45283	LINEGEAR	08/06/2021	23894	110222211	BOOTS	$354.50
			LINEGEAR		**Total Check Amount:**	**$354.50**
V45284	LONG BEACH BMW	08/06/2021	18120	480515161	BMW BRAKEPADS/PINS	$281.25
			LONG BEACH BMW		**Total Check Amount:**	**$281.25**
V45285	MADISON RAE MAHER	08/06/2021	30612	110212111	TRAINING EXPENSES	$560.30
			MADISON RAE MAHER		**Total Check Amount:**	**$560.30**
V45286	MARGARITO DAVID MENDEZ	08/06/2021	26196	110212111	TRAINING MILEAGE	$217.06
			MARGARITO DAVID MENDEZ		**Total Check Amount:**	**$217.06**
V45287	MINER, LTD	08/06/2021	27173	490515151	KEYPAD REPL FS1	$318.00
		08/06/2021	27173	490515151	P-2 SECURITY GATE RPR	$356.16
		08/06/2021	27173	490515151	APP BAY DOOR SVC @FS2	$4,884.64

City Disbursement Register

Between Aug 2, 2021 12:00 AM and Aug 6, 2021 11:59 PM

Check #	Vendor Name	Check Date	Vendor #	Budget Unit	Description	Amount
			MINER, LTD		**Total Check Amount:**	**$5,558.80**
V45288	MINNESOTA LIFE INSURANCE COMPANY	08/06/2021	30640	110	34730 LIFE INS AUG21	$6,231.15
			MINNESOTA LIFE INSURANCE COMPANY		**Total Check Amount:**	**$6,231.15**
V45289	MUNICIPAL WATER DISTRICT	08/06/2021	3784	420515131	21/22 RETAIL SVC CONN	$167,661.00
			MUNICIPAL WATER DISTRICT		**Total Check Amount:**	**$167,661.00**
V45290	ANTHONY NGUYEN	08/06/2021	25978	110212111	ICI CORE COURSE	$80.00
			ANTHONY NGUYEN		**Total Check Amount:**	**$80.00**
V45291	NTH GENERATION COMPUTING, INC.	08/06/2021	21379	110404521	FORTINET ACCESS POINT	$547.37
			NTH GENERATION COMPUTING, INC.		**Total Check Amount:**	**$547.37**
V45292	ONWARD ENGINEERING	08/06/2021	22106	110515171	INSP SVCS APR 2021	$220.00
		08/06/2021	22106	510707322	INSP SVCS JUNE 2021	$420.00
		08/06/2021	22106	510707959	INSP SVCS JUNE 2021	$220.00
		08/06/2021	22106	510707959	INSP SVCS MAY 2021	$935.00
			ONWARD ENGINEERING		**Total Check Amount:**	**$1,795.00**
V45293	ORVAC ELECTRONICS	08/06/2021	3614	480515161	ELECTRICAL CONNECTORS	$242.70
			ORVAC ELECTRONICS		**Total Check Amount:**	**$242.70**
V45294	PIPE TEC, INC.	08/06/2021	29480	420000000	CLOSED WATER ACCOUNT	$5,010.00
			PIPE TEC, INC.		**Total Check Amount:**	**$5,010.00**
V45295	PLUMBING WHOLESALE OUTLET, INC.	08/06/2021	18392	490515151	PLUMBING PARTS	$49.08
			PLUMBING WHOLESALE OUTLET, INC.		**Total Check Amount:**	**$49.08**
V45296	QUALITY PLACEMENT AUTHORITY, LLC	08/06/2021	27027	110141481	TEMP STAFF 7/11/21	$581.40
			QUALITY PLACEMENT AUTHORITY, LLC		**Total Check Amount:**	**$581.40**
V45297	R.J. NOBLE COMPANY	08/06/2021	1076	420515131	COLD MIX ASPHALT	$1,731.01
			R.J. NOBLE COMPANY		**Total Check Amount:**	**$1,731.01**
V45298	RAY-LITE INDUSTRIES, INC.	08/06/2021	19800	490515152	LED LIGHTING	$968.50
		08/06/2021	19800	510707923	LED LIGHTING	$3,683.81
			RAY-LITE INDUSTRIES, INC.		**Total Check Amount:**	**$4,652.31**
V45299	RICHARDS, WATSON & GERSHON	08/06/2021	8978	110111112	16 BOATRIGHT MAY21	$802.40
		08/06/2021	8978	840141412	0116 REIMB WORK JUN21	$7,998.00
		08/06/2021	8978	840141412	116 REIMB WORK MAY21	$2,967.00
		08/06/2021	8978	840141412	195 SAFER AVENUES JUN	$11,953.20
			RICHARDS, WATSON & GERSHON		**Total Check Amount:**	**$23,720.60**
V45300	RUSSELL SIGLER INC.	08/06/2021	21638	490515151	REFRIGERANT	$396.32
			RUSSELL SIGLER INC.		**Total Check Amount:**	**$396.32**
V45301	SC FUELS	08/06/2021	16654	480515161	REG UNL ETH 4198 GALS	$15,330.49
			SC FUELS		**Total Check Amount:**	**$15,330.49**
V45302	SPECTRUM GAS PRODUCTS, INC.	08/06/2021	16060	174222222	OXYGEN	$66.30
			SPECTRUM GAS PRODUCTS, INC.		**Total Check Amount:**	**$66.30**

City Disbursement Register

Between Aug 2, 2021 12:00 AM and Aug 6, 2021 11:59 PM

Check #	Vendor Name	Check Date	Vendor #	Budget Unit	Description	Amount
V45303	SPICERS PAPER, INC.	08/06/2021	18883	110141441	PAPER	$2,317.43
			SPICERS PAPER, INC.		**Total Check Amount:**	**$2,317.43**
V45304	STATE INDUSTRIAL PRODUCTS	08/06/2021	8572	490515151	222 CLEANER (FIRE)	$147.40
		08/06/2021	8572	490515151	NDC CLEANER (FIRE)	$224.98
			STATE INDUSTRIAL PRODUCTS		**Total Check Amount:**	**$372.38**
V45305	STEAMX LLC	08/06/2021	24072	480515161	CREDIT:GAS CAPS	($76.07)
		08/06/2021	24072	480515161	GAS CAPS/HOSES	$381.07
		08/06/2021	24072	480515161	MUFFLER/GASKET/ELBOW	$241.89
			STEAMX LLC		**Total Check Amount:**	**$546.89**
V45306	SUPERIOR ALARM SYSTEMS	08/06/2021	11074	110404541	JUL-DEC21 ALARM SVCS	$210.00
			SUPERIOR ALARM SYSTEMS		**Total Check Amount:**	**$210.00**
V45307	SWANK MOTION PICTURES, INC.	08/06/2021	10080	110404421	7/23 FAMILY FILMS DVD	$450.00
			SWANK MOTION PICTURES, INC.		**Total Check Amount:**	**$450.00**
V45308	TRINITY SOUND COMPANY	08/06/2021	11364	110404542	20/21 CONCERTS 8/4	$925.00
		08/06/2021	11364	110404542	20/21 CONCERTS 7/28	$925.00
		08/06/2021	11364	110404542	20/21 CONCERTS 7/21	$925.00
			TRINITY SOUND COMPANY		**Total Check Amount:**	**$2,775.00**
V45309	VIRTUAL PROJECT MANAGER	08/06/2021	23508	510707457	CIP/SW BCKUP/ST JUL21	$50.00
		08/06/2021	23508	510707460	CIP/SW BCKUP/ST JUL21	$50.00
		08/06/2021	23508	510707464	CIP/SW BCKUP/ST JUL21	$50.00
		08/06/2021	23508	510707311	CIP/SW BCKUP/ST JUL21	$50.00
		08/06/2021	23508	510707323	CIP/SW BCKUP/ST JUL21	$50.00
		08/06/2021	23508	510707430	CIP/SW BCKUP/ST JUL21	$50.00
		08/06/2021	23508	510707458	CIP/SW BCKUP/ST JUL21	$50.00
		08/06/2021	23508	510707251	CIP/SW BCKUP/ST JUL21	$50.00
		08/06/2021	23508	510707278	CIP/SW BCKUP/ST JUL21	$50.00
		08/06/2021	23508	510707459	CIP/SW BCKUP/ST JUL21	$50.00
			VIRTUAL PROJECT MANAGER		**Total Check Amount:**	**$500.00**
V45310	WALTERS WHOLESALE ELECTRIC	08/06/2021	1667	490515151	CABLE TIES	$12.54
		08/06/2021	1667	490515151	BALLAST	$53.14
			WALTERS WHOLESALE ELECTRIC		**Total Check Amount:**	**$65.68**
V45311	CHRISTINE WHITE	08/06/2021	18977	110222211	JULY 2021 MILEAGE	$11.20
			CHRISTINE WHITE		**Total Check Amount:**	**$11.20**
					Voucher Subtotal	**$1,284,859.96**

TOTAL **$1,675,623.91**

City Disbursement Register

Between Aug 9, 2021 12:00 AM and Aug 13, 2021 11:59 PM

Check #	Vendor Name	Check Date	Vendor #	Budget Unit	Description	Amount
188381	A-1 ALL AMERICAN ROOFING	08/13/2021	31342	840000000	DEVELOPER FEE REFUND	$342.00
			A-1 ALL AMERICAN ROOFING		**Total Check Amount:**	**$342.00**
188382	AEP SERVICES	08/13/2021	30268	110212131	K9 BOARDING MAY/JUN21	$210.00
			AEP SERVICES		**Total Check Amount:**	**$210.00**
188383	AGA ENGINEERS, INC	08/13/2021	30567	510707251	FIBER OPTC COMM DEC21	$495.00
			AGA ENGINEERS, INC		**Total Check Amount:**	**$495.00**
188384	ALL CITIES ENGINEERING, INC.	08/13/2021	30729	510707453	PP3 STEELE WTRMN REPL	$55,575.00
		08/13/2021	30729	510707457	PP3 PLSNT HILLS WTRMN	$88,825.00
			ALL CITIES ENGINEERING, INC.		**Total Check Amount:**	**$144,400.00**
188385	BARTEL ASSOCIATES, LLC	08/13/2021	18970	110141431	063021 DISCLOSURE RPT	$1,915.00
			BARTEL ASSOCIATES, LLC		**Total Check Amount:**	**$1,915.00**
188386	BKF ENGINEERS	08/13/2021	29410	510707322	WTR IMP DESIGN APR21	$10,177.00
		08/13/2021	29410	510707322	WTR IMP DESIGN MAY21	$1,540.00
		08/13/2021	29410	510707322	WTR IMP DESIGN MAR21	$15,919.50
			BKF ENGINEERS		**Total Check Amount:**	**$27,636.50**
188387	ANA BOMGAARS	08/13/2021	31340	110	MAD SCIENCE REFUND	$250.00
			ANA BOMGAARS		**Total Check Amount:**	**$250.00**
188388	BUSINESS CARD	08/13/2021	18749	110212121	BSCARD PD 072321	$2,971.04
		08/13/2021	18749	110222231	BSCARD FIRE 072321	$35.00
		08/13/2021	18749	110404421	BSCARD CS II 072321	$7,116.00
		08/13/2021	18749	420515131	BSCARD WATER 072321	$113.16
		08/13/2021	18749	110212111	BSCARD PD 072321	$1,062.70
		08/13/2021	18749	110222223	BSCARD FIRE 072321	$115.90
		08/13/2021	18749	950000000	ILJAOC BSCARD MJ 0721	$212.94
		08/13/2021	18749	110222211	BSCARD FIRE 072321	$29.99
		08/13/2021	18749	510707923	BSCARD FIRE 072321	$4,909.63
			BUSINESS CARD		**Total Check Amount:**	**$16,566.36**
188389	LIJUAN CHANG	08/13/2021	31336	420000000	CLOSED WATER ACCOUNT	$121.00
			LIJUAN CHANG		**Total Check Amount:**	**$121.00**
188390	CHICO ENTERTAINMENT	08/13/2021	30156	110404542	2021 CONCERTS 8/4/21	$1,300.00
			CHICO ENTERTAINMENT		**Total Check Amount:**	**$1,300.00**
188391	KATHERINE CHIDESTER	08/13/2021	29117	110404541	JULY 2021 MILEAGE	$6.49
		08/13/2021	29117	110404541	MILEAGE JAN-JUN 2021	$7.17
			KATHERINE CHIDESTER		**Total Check Amount:**	**$13.66**
188392	COMMERCIAL AQUATIC SERVICES, INC.	08/13/2021	25513	110404422	PLUNGE CHEMICALS	$741.50
			COMMERCIAL AQUATIC SERVICES, INC.		**Total Check Amount:**	**$741.50**
188393	ROSS COOK	08/13/2021	31345	110	CS-EVENT REFUND COVID	$140.00
			ROSS COOK		**Total Check Amount:**	**$140.00**

City Disbursement Register

Between Aug 9, 2021 12:00 AM and Aug 13, 2021 11:59 PM

Check #	Vendor Name	Check Date	Vendor #	Budget Unit	Description	Amount
188394	COUNTY OF ORANGE	08/13/2021	4799	110212131	ANIMAL CARE APR-JUN21	$78,094.67
			COUNTY OF ORANGE		**Total Check Amount:**	**$78,094.67**
188395	COUNTY OF ORANGE	08/13/2021	4799	172212133	800MHZ BB MNT JUL-SEP	$26,434.00
			COUNTY OF ORANGE		**Total Check Amount:**	**$26,434.00**
188396	DFS FLOORING	08/13/2021	16712	490515151	FL3 CARPET CLEANING	$825.00
			DFS FLOORING		**Total Check Amount:**	**$825.00**
188397	DOUG MARTIN CONTRACTING INC	08/13/2021	4512	510707312	RETENTION:20/21SLURRY	$7,078.71
		08/13/2021	4512	510707312	20/21 SLURRY SEAL	$134,495.39
			DOUG MARTIN CONTRACTING INC		**Total Check Amount:**	**$141,574.10**
188398	EDEN K9 CONSULTING & TRAINING CORP	08/13/2021	29888	110212131	K9 KATS PLAT TRAINING	$348.00
			EDEN K9 CONSULTING & TRAINING CORP		**Total Check Amount:**	**$348.00**
188399	SOUTHERN CALIFORNIA EDISON	08/13/2021	3343	110515121	ELECTRICITY JULY21	$18,789.99
		08/13/2021	3343	110515125	ELECTRICITY JUN21	$2,583.51
		08/13/2021	3343	110515121	ELECTRICITY FEB-JUN21	$198.01
		08/13/2021	3343	110515141	ELECTRICITY JULY21	$92.86
		08/13/2021	3343	341515112	ELECTRICITY JULY21	$112.81
		08/13/2021	3343	345515112	ELECTRICITY JULY21	$60.31
		08/13/2021	3343	110515125	ELECTRICITY JULY21	$4,270.13
		08/13/2021	3343	343515112	ELECTRICITY JULY21	$167.66
		08/13/2021	3343	346515112	ELECTRICITY JULY21	$240.37
		08/13/2021	3343	420515131	ELECTRICITY JULY21	$58,915.87
		08/13/2021	3343	430515123	ELECTRICITY JULY21	$601.66
		08/13/2021	3343	490515151	ELECTRICITY JULY21	$4,757.29
		08/13/2021	3343	880515113	ELECTRICITY JULY21	$15.28
			SOUTHERN CALIFORNIA EDISON		**Total Check Amount:**	**$90,805.75**
188400	EIDE BAILLY LLP	08/13/2021	29040	110141431	CALCARD AUP MAY-JUL21	$9,000.00
			EIDE BAILLY LLP		**Total Check Amount:**	**$9,000.00**
188401	FRONTIER COMMUNICATIONS	08/13/2021	26183	420515131	5622821220 7/28-8/27	$190.73
			FRONTIER COMMUNICATIONS		**Total Check Amount:**	**$190.73**
188402	MICHELLE LUCY GHARIBIAN	08/13/2021	29373	110404541	JEWELRY WORKSHOP	$210.00
			MICHELLE LUCY GHARIBIAN		**Total Check Amount:**	**$210.00**
188403	BRANDON GUELKER	08/13/2021	31333	420000000	CLOSED WATER ACCOUNT	$69.58
			BRANDON GUELKER		**Total Check Amount:**	**$69.58**
188404	HARDY & HARPER, INC	08/13/2021	30669	510707278	PP#3 BERRY ST/IMP HWY	$454,926.12
			HARDY & HARPER, INC		**Total Check Amount:**	**$454,926.12**
188405	BROOKE ASTON HARPER	08/13/2021	27864	110404542	MOTOWN MIX 8/13/2021	$1,800.00
			BROOKE ASTON HARPER		**Total Check Amount:**	**$1,800.00**

City Disbursement Register

Between Aug 9, 2021 12:00 AM and Aug 13, 2021 11:59 PM

Check #	Vendor Name	Check Date	Vendor #	Budget Unit	Description	Amount
188406	DANIEL HARRIS	08/13/2021	31334	420000000	CLOSED WATER ACCOUNT	$48.59
			DANIEL HARRIS		**Total Check Amount:**	**$48.59**
188407	VERONICA HERNANDEZ	08/13/2021	31338	110	CS-EVENT REFUND COVID	$175.00
			VERONICA HERNANDEZ		**Total Check Amount:**	**$175.00**
188408	ELISABETH KATAOKA	08/13/2021	26059	110404542	PAGE TO STAGE: ST MGR	$500.00
			ELISABETH KATAOKA		**Total Check Amount:**	**$500.00**
188409	LINSCOTT, LAW & GREENSPAN ENGINEERS	08/13/2021	29408	110323231	SB2 PARKNG STDS JUN21	$5,048.40
		08/13/2021	29408	110323231	SB2 PRKNG STDS APR21	$5,662.00
		08/13/2021	29408	110323231	SB2 PARKNG STDS MAY21	$7,704.58
			LINSCOTT, LAW & GREENSPAN ENGINEERS		**Total Check Amount:**	**$18,414.98**
188410	LU'S LIGHTHOUSE, INC.	08/13/2021	28330	480515161	BACK UP ALARMS/HEADLIGHTS	$447.77
			LU'S LIGHTHOUSE, INC.		**Total Check Amount:**	**$447.77**
188411	MCPEEK'S DODGE OF ANAHEIM	08/13/2021	22049	480515161	REPROGRAM ABS MODULE	$462.50
			MCPEEK'S DODGE OF ANAHEIM		**Total Check Amount:**	**$462.50**
188412	RICHARD MORALES	08/13/2021	31341	110	BCC MEMBERSHIP REFUND	$107.79
			RICHARD MORALES		**Total Check Amount:**	**$107.79**
188413	MUNICIPAL DENTAL POOL	08/13/2021	30638	110	DELTA DENTAL AUG 2021	$17,053.43
			MUNICIPAL DENTAL POOL		**Total Check Amount:**	**$17,053.43**
188414	ANA NEICE	08/13/2021	31339	110	MAD SCIENCE REFUND	$270.00
			ANA NEICE		**Total Check Amount:**	**$270.00**
188415	CATHY NEWCOMB	08/13/2021	31346	420000000	WTR-OVERPYMT REIMBURS	$653.18
			CATHY NEWCOMB		**Total Check Amount:**	**$653.18**
188416	NV5 INC	08/13/2021	29891	510707475	BP#2 DESIGNSVCS JUN21	$872.00
			NV5 INC		**Total Check Amount:**	**$872.00**
188417	OFFICE DEPOT, INC	08/13/2021	4743	110404311	OFFICE SUPPLIES	$323.82
		08/13/2021	4743	110212111	OFFICE SUPPLIES	$49.00
		08/13/2021	4743	110404311	TONER	$465.29
			OFFICE DEPOT, INC		**Total Check Amount:**	**$838.11**
188418	ORANGE CTY INDOOR SHOOTING RANGE	08/13/2021	13157	110212131	APR21 RANGE FEES	$336.00
		08/13/2021	13157	110212131	JUN21 RANGE FEES	$133.00
			ORANGE CTY INDOOR SHOOTING RANGE		**Total Check Amount:**	**$469.00**
188419	MERILEE OREYZI	08/13/2021	30928	110	CS-BCC REFUND COVID19	$187.20
			MERILEE OREYZI		**Total Check Amount:**	**$187.20**
188420	P.L. HAWN COMPANY, INC.	08/13/2021	10742	911515151	HVAC FILTERS	$2,168.86
		08/13/2021	10742	911515151	BCC HVAC FILTERS	$411.95
			P.L. HAWN COMPANY, INC.		**Total Check Amount:**	**$2,580.81**
188421	PATRIOT ENVIRONMENTAL SERVICES INC	08/13/2021	29709	410515124	ENCAMPMENT CLEANUP	$12,797.10

City Disbursement Register

Between Aug 9, 2021 12:00 AM and Aug 13, 2021 11:59 PM

Check #	Vendor Name	Check Date	Vendor #	Budget Unit	Description	Amount
			PATRIOT ENVIRONMENTAL SERVICES INC		**Total Check Amount:**	**$12,797.10**
188422	PERFORMANCE TRUCK REPAIR, INC.	08/13/2021	29371	480515161	27008 A/C REPAIR	$3,093.17
		08/13/2021	29371	480515161	ENGINE EXHAUST REPAIR	$4,750.26
			PERFORMANCE TRUCK REPAIR, INC.		**Total Check Amount:**	**$7,843.43**
188423	PUENTE HILLS FORD	08/13/2021	25742	480515161	WHEELS AND SENSORS	$784.85
			PUENTE HILLS FORD		**Total Check Amount:**	**$784.85**
188424	S.C. YAMAMOTO, INC.	08/13/2021	22021	343515112	IRRIGATION REPAIRS	$614.00
		08/13/2021	22021	110515141	PO ADJ INV#1410852	$0.00
			S.C. YAMAMOTO, INC.		**Total Check Amount:**	**$614.00**
188425	SPARKLETTS	08/13/2021	3001	110111161	COUNCIL MTG WTR JUN21	$20.96
		08/13/2021	3001	110111161	CCC FOUNTN WTR JUN21	$4.99
			SPARKLETTS		**Total Check Amount:**	**$25.95**
188426	SPARKLETTS	08/13/2021	3001	110141441	WTRDISP+BOTTLES JUN21	$31.12
			SPARKLETTS		**Total Check Amount:**	**$31.12**
188427	ST. JUDE MEDICAL CENTER	08/13/2021	3503	110212131	MEDICAL SERVICES	$1,788.80
			ST. JUDE MEDICAL CENTER		**Total Check Amount:**	**$1,788.80**
188428	THREE PEAKS CORP	08/13/2021	29357	110515141	INST BASKETBALL POLES	$3,900.00
		08/13/2021	29357	360515145	CUT 8" CORE:CONC STND	$440.00
			THREE PEAKS CORP		**Total Check Amount:**	**$4,340.00**
188429	UNIFIRST CORPORATION	08/13/2021	27988	110212131	PD LAUNDRY SVCS 6/28	$24.88
		08/13/2021	27988	110212131	PD LAUNDRY SVCS 6/7	$24.88
			UNIFIRST CORPORATION		**Total Check Amount:**	**$49.76**
188430	MARIASELA VALLEJO	08/13/2021	31344	110	CS-EVENT REFUND COVID	$170.00
			MARIASELA VALLEJO		**Total Check Amount:**	**$170.00**
188431	RUBEN VELASCO	08/13/2021	31335	420000000	CLOSED WATER ACCOUNT	$42.95
			RUBEN VELASCO		**Total Check Amount:**	**$42.95**
188432	VETERINARY PET INS. CO.	08/13/2021	20975	110	PET INSURANCE JUL21	$971.00
			VETERINARY PET INS. CO.		**Total Check Amount:**	**$971.00**
188433	KELLY WALPER	08/13/2021	31343	110	BREAFEST REFUND COVID	$150.00
			KELLY WALPER		**Total Check Amount:**	**$150.00**
					Check Subtotal	**$1,071,098.29**
V45312	JUDY ALLEN	08/13/2021	20447	110404215	CLASS INSTR BCC JUL21	$112.00
			JUDY ALLEN		**Total Check Amount:**	**$112.00**
V45313	ALLSTAR FIRE EQUIPMENT	08/13/2021	8353	110222221	BOOTS	$1,120.60
		08/13/2021	8353	110222221	FLASHLIGHTS	$892.06
		08/13/2021	8353	110222221	FIRE HELMETS	$2,755.22
			ALLSTAR FIRE EQUIPMENT		**Total Check Amount:**	**$4,767.88**
V45314	ALTERNATIVE HOSE, INC.	08/13/2021	18488	480515161	CAMLOCK, WRENCH	$65.17

City Disbursement Register

Between Aug 9, 2021 12:00 AM and Aug 13, 2021 11:59 PM

Check #	Vendor Name	Check Date	Vendor #	Budget Unit	Description	Amount
			ALTERNATIVE HOSE, INC.		**Total Check Amount:**	**$65.17**
V45315	BEN'S ASPHALT, INC..	08/13/2021	1808	110515121	ASPHALT RPRS MAY 2021	$59,128.81
		08/13/2021	1808	510707442	MAIN WTR LN RPR MAY21	$4,769.08
		08/13/2021	1808	510707961	BCC PARKING LOT REHAB	$22,717.40
			BEN'S ASPHALT, INC..		**Total Check Amount:**	**$86,615.29**
V45316	BEST LAWN MOWER SERVICE	08/13/2021	16230	480515161	AIR FILTER/BLADES	$49.76
		08/13/2021	16230	480515161	CHAINSAW CHAINS	$278.04
			BEST LAWN MOWER SERVICE		**Total Check Amount:**	**$327.80**
V45317	BILL'S AUTO UPHOLSTERY	08/13/2021	10510	480515161	DOOR PANEL REPAIR	$220.00
		08/13/2021	10510	480515161	DRIVER'S SEAT REPAIR	$190.00
			BILL'S AUTO UPHOLSTERY		**Total Check Amount:**	**$410.00**
V45318	JANET BIRCH	08/13/2021	25982	110404521	YOGA BCC 7-6-21	$30.00
			JANET BIRCH		**Total Check Amount:**	**$30.00**
V45319	CHRISTINE BOATNER	08/13/2021	18460	110404215	B.PUMP/LOW IMP/S.SNKS	$336.00
			CHRISTINE BOATNER		**Total Check Amount:**	**$336.00**
V45320	HEATHER BOWLING	08/13/2021	24933	110404541	MILEAGE JAN-JUN 2021	$29.34
			HEATHER BOWLING		**Total Check Amount:**	**$29.34**
V45321	BREA AUTO BODY, INC.	08/13/2021	27982	480515161	983K ACCIDENT REPAIR	$1,082.55
			BREA AUTO BODY, INC.		**Total Check Amount:**	**$1,082.55**
V45322	BREA TOWING	08/13/2021	16399	110212121	TOWING FEES JULY 2021	$2,028.35
			BREA TOWING		**Total Check Amount:**	**$2,028.35**
V45323	BREA/ORANGE COUNTY PLUMBING	08/13/2021	3781	490515151	FS1 PLUMBING	$1,001.71
			BREA/ORANGE COUNTY PLUMBING		**Total Check Amount:**	**$1,001.71**
V45324	KATHY A BREAUX	08/13/2021	5320	110404145	ACRYLIC PAINTING	$280.50
			KATHY A BREAUX		**Total Check Amount:**	**$280.50**
V45325	SHANNON E. BUCKELS	08/13/2021	12046	110212111	TRAINING EXPENSES	$889.67
			SHANNON E. BUCKELS		**Total Check Amount:**	**$889.67**
V45326	CALIFORNIA DOMESTIC WATER CO	08/13/2021	3388	420515131	WTR CONSUMPTION JUL21	$507,057.99
			CALIFORNIA DOMESTIC WATER CO		**Total Check Amount:**	**$507,057.99**
V45327	ARLINDA CANTU	08/13/2021	26312	110404215	PSNL TRAINER JUL21	$986.32
			ARLINDA CANTU		**Total Check Amount:**	**$986.32**
V45328	ANDREW P CATOR	08/13/2021	6646	460141474	JULY 2021 MILEAGE	$224.56
			ANDREW P CATOR		**Total Check Amount:**	**$224.56**
V45329	CHANDLER ASSET MANAGEMENT, INC.	08/13/2021	4375	110000000	INV MGMT SVCS JUL21	$17.64
		08/13/2021	4375	930000000	INV MGMT SVCS JUL21	$6,308.49
		08/13/2021	4375	875000000	INV MGMT SVCS JUL21	$46.01
			CHANDLER ASSET MANAGEMENT, INC.		**Total Check Amount:**	**$6,372.14**
V45330	COMLOCK SECURITY-GROUP	08/13/2021	13625	490515151	DOOR REPAIR	$207.50

City Disbursement Register

Between Aug 9, 2021 12:00 AM and Aug 13, 2021 11:59 PM

Check #	Vendor Name	Check Date	Vendor #	Budget Unit	Description	Amount
			COMLOCK SECURITY-GROUP		**Total Check Amount:**	**$207.50**
V45331	DANGELO CO	08/13/2021	4562	110515143	BACK FLOW PARTS	$48.10
			DANGELO CO		**Total Check Amount:**	**$48.10**
V45332	DANIELS TIRE SERVICE	08/13/2021	3133	480515161	FIRE TRUCK TIRES	$1,665.95
			DANIELS TIRE SERVICE		**Total Check Amount:**	**$1,665.95**
V45333	MYRA DUVALL	08/13/2021	18083	110404215	YOGA JULY 2021	$420.00
			MYRA DUVALL		**Total Check Amount:**	**$420.00**
V45334	EMERSON BRAN MANAGEMENT	08/13/2021	25725	110404542	EVENING OF LATIN JAZZ	$3,500.00
			EMERSON BRAN MANAGEMENT		**Total Check Amount:**	**$3,500.00**
V45335	ENTENMANN ROVIN COMPANY	08/13/2021	3457	110212111	BADGES	$83.50
			ENTENMANN ROVIN COMPANY		**Total Check Amount:**	**$83.50**
V45336	FIDELITY SECURITY LIFE INSURANCE	08/13/2021	23035	110	9827288 VISION AUG21	$3,254.80
			FIDELITY SECURITY LIFE INSURANCE		**Total Check Amount:**	**$3,254.80**
V45337	FIX AUTO LA HABRA	08/13/2021	28720	480515161	965 ACCIDENT REPAIR	$2,346.90
			FIX AUTO LA HABRA		**Total Check Amount:**	**$2,346.90**
V45338	MELISSA GIFFORD	08/13/2021	10645	110404215	B.PUMP/CIRCUIT JUL21	$229.37
			MELISSA GIFFORD		**Total Check Amount:**	**$229.37**
V45339	GEOFFREY HARLAN GOBLE	08/13/2021	27565	110212111	TRAINING MILEAGE	$50.40
			GEOFFREY HARLAN GOBLE		**Total Check Amount:**	**$50.40**
V45340	RAY GONZALEZ	08/13/2021	31019	110404424	SOFTBALL UMPIRE FEES	$102.00
			RAY GONZALEZ		**Total Check Amount:**	**$102.00**
V45341	GUARANTEED JANITORIAL SERVICES, INC	08/13/2021	28695	490515151	DAY PORTERS CCC JUL21	$4,690.41
		08/13/2021	28695	490515151	JUL21 JAN SVCS:P.HALL	$1,697.39
		08/13/2021	28695	490515151	DAY PORTERS BCC JUL21	$4,690.42
		08/13/2021	28695	490515151	JUL21 JAN SVCS:SR CTR	$2,549.08
		08/13/2021	28695	490515151	JUL21 JAN SVCS:YARD	$1,206.92
		08/13/2021	28695	110515125	JUL21 JAN SVCS:DT	$2,679.00
		08/13/2021	28695	490515151	JUL21 JAN SVCS:BCC	$4,302.58
		08/13/2021	28695	490515151	JUL21 JAN SVCS:PLUNGE	$166.42
		08/13/2021	28695	490515151	JUL21 JAN SVCS:CCC	$8,969.83
			GUARANTEED JANITORIAL SERVICES, INC		**Total Check Amount:**	**$30,952.05**
V45342	GABRIEL HANNAH	08/13/2021	17533	110404424	SOFTBALL UMPIRE FEES	$102.00
			GABRIEL HANNAH		**Total Check Amount:**	**$102.00**
V45343	INTERWEST CONSULTING GROUP, INC.	08/13/2021	28473	510707251	PROF SVC FEB 2021	$7,425.00
		08/13/2021	28473	510707251	PROF SVC JAN 2021	$8,625.00
			INTERWEST CONSULTING GROUP, INC.		**Total Check Amount:**	**$16,050.00**
V45344	JACKSON'S AUTO SUPPLY	08/13/2021	1143	480515161	AUTO SUPPLIES JUL21	$6,141.09
		08/13/2021	1143	490515151	HVAC BELTS	$17.39

City Disbursement Register

Between Aug 9, 2021 12:00 AM and Aug 13, 2021 11:59 PM

Check #	Vendor Name	Check Date	Vendor #	Budget Unit	Description	Amount
			JACKSON'S AUTO SUPPLY		**Total Check Amount:**	**$6,158.48**
V45345	JANE JAMES	08/13/2021	31161	110404215	YOGA JULY 2021	$196.00
			JANE JAMES		**Total Check Amount:**	**$196.00**
V45346	PAMELA JOHNSTON	08/13/2021	28025	110404215	ZUMBA JULY 2021	$390.00
			PAMELA JOHNSTON		**Total Check Amount:**	**$390.00**
V45347	KEENAN & ASSOCIATES	08/13/2021	22439	470141483	2021 WORKERS' COMP #9	$9,839.33
			KEENAN & ASSOCIATES		**Total Check Amount:**	**$9,839.33**
V45348	KREUZER CONSULTING GROUP	08/13/2021	22072	510707965	BERRY RES RR FEB-JUN	$244.00
			KREUZER CONSULTING GROUP		**Total Check Amount:**	**$244.00**
V45349	DOLLY LAI	08/13/2021	18084	110404215	YOGA JULY 2021	$270.00
			DOLLY LAI		**Total Check Amount:**	**$270.00**
V45350	LAKIN TIRE WEST, INC.	08/13/2021	12286	480515161	USED TIRE DISPOSAL	$480.60
			LAKIN TIRE WEST, INC.		**Total Check Amount:**	**$480.60**
V45351	BERRY LIANG	08/13/2021	25640	110404215	PSNL TRAINR BCC JUL21	$538.20
		08/13/2021	25640	110404215	BP/CYC/SS/BOOTCAMP/TR	$1,067.36
			BERRY LIANG		**Total Check Amount:**	**$1,605.56**
V45352	LIFE-ASSIST, INC.	08/13/2021	10530	174222222	PM SUPPLIES FS3	$329.27
			LIFE-ASSIST, INC.		**Total Check Amount:**	**$329.27**
V45353	LINCOLN AQUATICS	08/13/2021	17902	110404422	PLUNGE CHEMICALS	$1,200.62
			LINCOLN AQUATICS		**Total Check Amount:**	**$1,200.62**
V45354	LINEGEAR	08/13/2021	23894	110222221	CREW BOSS WILDLAND COAT (	$1,973.98
		08/13/2021	23894	110222221	DANNER WILDLAND FF-ROUGH	$1,476.18
		08/13/2021	23894	110222221	SEW "BREA FIRE DEPT."	$129.30
		08/13/2021	23894	110222221	1.5" FIRE BELT WITH BABY	$163.78
		08/13/2021	23894	110222221	ESS STRIKETEAM SJ - FULLY	$506.43
		08/13/2021	23894	110222221	PREMIUM COWHIDE LEATHER	$116.37
		08/13/2021	23894	110222221	5.11 TRAINER BELT 511-59	$336.18
		08/13/2021	23894	110222221	FF PANT (FULL CUT) 7.5 OZ	$3,594.54
		08/13/2021	23894	110222221	PRO-WARRINGTON BOOT #3003	$2,835.98
		08/13/2021	23894	110222221	CREW BOSS 6.8 OZ. DUAL CO	$4,982.36
		08/13/2021	23894	110222221	FF SHIRT - SHORT SLEEVE W	$2,948.03
		08/13/2021	23894	110222221	WILDLAND TACTICAL FF - SM	$918.03
			LINEGEAR		**Total Check Amount:**	**$19,981.16**
V45355	TANYA LOSCUTOFF	08/13/2021	22092	110404215	SUPER SCULPT JUL 2021	$84.00

City Disbursement Register

Between Aug 9, 2021 12:00 AM and Aug 13, 2021 11:59 PM

Check #	Vendor Name	Check Date	Vendor #	Budget Unit	Description	Amount
			TANYA LOSCUTOFF		**Total Check Amount:**	**$84.00**
V45356	MAD SCIENCE	08/13/2021	5399	110404145	321 BLAST OFF	$2,612.50
			MAD SCIENCE		**Total Check Amount:**	**$2,612.50**
V45357	LORI MAIER	08/13/2021	31187	110404215	ZUMBA JULY 2021	$308.00
			LORI MAIER		**Total Check Amount:**	**$308.00**
V45358	ANDREA MCGRANAHAN	08/13/2021	26046	110404215	BARR/BP/CYC/LI/SS/TRX	$1,380.00
		08/13/2021	26046	110404215	BARRE JUN 2021	$112.00
		08/13/2021	26046	110404215	PSNL TRAINER JUL21	$162.00
			ANDREA MCGRANAHAN		**Total Check Amount:**	**$1,654.00**
V45359	MESSINA AND ASSOCIATES	08/13/2021	25217	110212111	MGMT TEAM OFFSITE SVC	$570.00
			MESSINA AND ASSOCIATES		**Total Check Amount:**	**$570.00**
V45360	MINER, LTD	08/13/2021	27173	490515151	APPBAY DOOR SVC FS3	$220.00
		08/13/2021	27173	490515151	APPBAY DOOR SVC FS2	$245.00
		08/13/2021	27173	490515151	APPBAY DOOR SVC FS1	$139.00
		08/13/2021	27173	490515151	APPBAY DOOR SVC FS4	$139.00
		08/13/2021	27173	490515151	GATE REPAIR @ FS2	$636.00
		08/13/2021	27173	490515151	THEATRE DOOR REPAIR	$318.00
		08/13/2021	27173	490515151	REPLACE GATE KEY PAD	$904.79
			MINER, LTD		**Total Check Amount:**	**$2,601.79**
V45361	CAITLIN MOHNEY	08/13/2021	29108	110404521	SR CTR YOGA JUL21	$60.00
		08/13/2021	29108	110404521	BCC YOGA JUNE 2021	$150.00
			CAITLIN MOHNEY		**Total Check Amount:**	**$210.00**
V45362	JENNIFER MONZON-SCROFINI	08/13/2021	20158	110404215	BP/KICKBOX/ST+STRETCH	$308.00
			JENNIFER MONZON-SCROFINI		**Total Check Amount:**	**$308.00**
V45363	NATASHA MOORE	08/13/2021	10711	110404215	BODY PUMP JULY 2021	$196.00
			NATASHA MOORE		**Total Check Amount:**	**$196.00**
V45364	ONWARD ENGINEERING	08/13/2021	22106	110000000	INSP SVCS MAR 2021	($237.00)
		08/13/2021	22106	84051517I	INSP SVCS MAR 2021	$2,747.00
			ONWARD ENGINEERING		**Total Check Amount:**	**$2,510.00**
V45365	ORANGE COUNTY KARATE CENTER LLC	08/13/2021	31160	110404145	BASIC & INTRO KARATE	$360.00
			ORANGE COUNTY KARATE CENTER LLC		**Total Check Amount:**	**$360.00**
V45366	PACIFIC TELEMANAGEMENT SERVICES	08/13/2021	19696	475141471	7147920398 AUGUST 21	$75.00
			PACIFIC TELEMANAGEMENT SERVICES		**Total Check Amount:**	**$75.00**
V45367	PARKHOUSE TIRE, INC.	08/13/2021	22120	480515161	TRUCK TIRES	$3,333.73
			PARKHOUSE TIRE, INC.		**Total Check Amount:**	**$3,333.73**
V45368	PETE'S ROAD SERVICE, INC.	08/13/2021	3734	480515161	SWEEPER POLY FILLED TIRES	$1,438.33

City Disbursement Register

Between Aug 9, 2021 12:00 AM and Aug 13, 2021 11:59 PM

Check #	Vendor Name	Check Date	Vendor #	Budget Unit	Description	Amount
			PETE'S ROAD SERVICE, INC.		**Total Check Amount:**	**$1,438.33**
V45369	QUALITY PLACEMENT AUTHORITY, LLC	08/13/2021	27027	110111143	TEMP STAFF 7/25/2021	$1,104.68
		08/13/2021	27027	110111143	TEMP STAFF 7/18/2021	$581.40
			QUALITY PLACEMENT AUTHORITY, LLC		**Total Check Amount:**	**$1,686.08**
V45370	KAYLA RABJOHNS	08/13/2021	28472	110404215	CIRCUIT TRNG JUL21	$26.00
			KAYLA RABJOHNS		**Total Check Amount:**	**$26.00**
V45371	READWRITE EDUCATIONAL, INC.	08/13/2021	3444	110404145	MATH/READING DEV	$687.50
			READWRITE EDUCATIONAL, INC.		**Total Check Amount:**	**$687.50**
V45372	RICHARDS, WATSON & GERSHON	08/13/2021	8978	280323215	9999 GEN LGL SVCS JUN	$2,151.00
		08/13/2021	8978	110111112	9999 GEN LGL SVCS JUN	$15,920.00
		08/13/2021	8978	420141421	182 WATER RATES JUN21	$163.81
		08/13/2021	8978	110111112	0001 GEN LGL SVCS JUN	$7,992.45
		08/13/2021	8978	280323215	0001 GEN LGL SVCS JUN	$912.00
		08/13/2021	8978	440515122	0001 GEN LGL SVCS JUN	$2,565.00
		08/13/2021	8978	440515122	9999 GEN LGL SVCS JUN	$3,677.00
		08/13/2021	8978	510707952	9999 GEN LGL SVCS JUN	$176.00
			RICHARDS, WATSON & GERSHON		**Total Check Amount:**	**$33,557.26**
V45373	ROTH STAFFING COMPANIES LP	08/13/2021	27579	110141481	TEMP STAFF 7/25/21	$597.80
			ROTH STAFFING COMPANIES LP		**Total Check Amount:**	**$597.80**
V45374	RUSSELL SIGLER INC.	08/13/2021	21638	490515151	THERMOSTATS SERVER RM	$69.84
		08/13/2021	21638	490515151	HVAC FUSE	$31.25
			RUSSELL SIGLER INC.		**Total Check Amount:**	**$101.09**
V45375	MARY M. SAMBRANO	08/13/2021	28001	110404521	ZUMBA GOLD JULY21 (4)	$120.00
		08/13/2021	28001	110404521	ZUMBA GOLD JUNE 2021	$60.00
			MARY M. SAMBRANO		**Total Check Amount:**	**$180.00**
V45376	SERGIO SARMIENTO	08/13/2021	31076	110404145	JUNIOR GOLF	$500.00
			SERGIO SARMIENTO		**Total Check Amount:**	**$500.00**
V45377	SHRED-IT USA	08/13/2021	7438	110111161	SHRED DOC JUN21	$5.33
		08/13/2021	7438	110111161	DOC SHRED JUL21	$5.33
		08/13/2021	7438	110212122	DOC SHRED JUL21	$69.34
		08/13/2021	7438	110212122	SHRED DOC JUN21	$69.34
		08/13/2021	7438	470141483	DOC SHRED JUL21	$5.33
		08/13/2021	7438	470141483	SHRED DOC JUN21	$5.33
			SHRED-IT USA		**Total Check Amount:**	**$160.00**
V45378	SIGNARAMA OF ANAHEIM	08/13/2021	12440	110515148	SIGNS	$699.65
			SIGNARAMA OF ANAHEIM		**Total Check Amount:**	**$699.65**
V45379	ISMAEL O SILVA	08/13/2021	24370	110404215	ZUMBA JULY 2021	$300.00
			ISMAEL O SILVA		**Total Check Amount:**	**$300.00**

City Disbursement Register

Between Aug 9, 2021 12:00 AM and Aug 13, 2021 11:59 PM

Check #	Vendor Name	Check Date	Vendor #	Budget Unit	Description	Amount
V45380	SITEONE LANDSCAPE SUPPLY, LLC	08/13/2021	25942	110515141	IRRIGATION PARTS	$223.92
		08/13/2021	25942	110515141	TOOLS/VALVE BOXES	$189.02
		08/13/2021	25942	110515148	IRRIGATION PARTS/TOOLS	$77.76
		08/13/2021	25942	110515141	IRRIGATION PARTS/TOOLS	$1,954.03
		08/13/2021	25942	110515143	IRRIGATION PARTS	$62.49
		08/13/2021	25942	110515144	IRRIGATION PARTS/TOOLS	$274.08
		08/13/2021	25942	360515145	IRRIGATION PARTS/TOOLS	$122.60
		SITEONE LANDSCAPE SUPPLY, LLC			**Total Check Amount:**	**$2,903.90**
V45381	SNAP-ON INDUSTRIAL	08/13/2021	17125	480515161	BRAKE CALIPER KIT	$240.85
		SNAP-ON INDUSTRIAL			**Total Check Amount:**	**$240.85**
V45382	STAGELIGHT FAMILY PRODUCTIONS	08/13/2021	7825	110404542	WIZARD OF OZ 2021 #2	$16,612.80
		STAGELIGHT FAMILY PRODUCTIONS			**Total Check Amount:**	**$16,612.80**
V45383	STEVE A. FILARSKY	08/13/2021	31186	470141483	PROF LEGAL SVCS JUL21	$1,436.20
		STEVE A. FILARSKY			**Total Check Amount:**	**$1,436.20**
V45384	SUPERIOR ALARM SYSTEMS	08/13/2021	11074	360515145	ALARM SVCS WILDCATTER	$300.00
		SUPERIOR ALARM SYSTEMS			**Total Check Amount:**	**$300.00**
V45385	TERRY'S TESTING, INC.	08/13/2021	9217	110515143	BACK FLOW REPAIRS	$1,200.00
		08/13/2021	9217	360515145	BACK FLOW TESTING	$90.00
		08/13/2021	9217	110515125	BACK FLOW TESTING	$180.00
		08/13/2021	9217	110515143	BACK FLOW TESTING	$3,690.00
		08/13/2021	9217	360515147	BACK FLOW TESTING	$45.00
		08/13/2021	9217	110515141	BACK FLOW TESTING	$1,125.00
		08/13/2021	9217	110515144	BACK FLOW REPAIRS	$1,750.00
		08/13/2021	9217	110515148	BACK FLOW TESTING	$135.00
		08/13/2021	9217	360515147	BACK FLOW REPAIRS	$325.00
		08/13/2021	9217	110515141	BACK FLOW REPAIRS	$960.00
		08/13/2021	9217	110515144	BACK FLOW TESTING	$90.00
		08/13/2021	9217	110515148	BACK FLOW TEST	$60.00
		08/13/2021	9217	430515123	BACK FLOW TESTING	$90.00
		TERRY'S TESTING, INC.			**Total Check Amount:**	**$9,740.00**
V45386	THOMSON REUTERS - WEST	08/13/2021	22020	110212121	WEST INFO CHGS JUL21	$487.22
		THOMSON REUTERS - WEST			**Total Check Amount:**	**$487.22**
V45387	LETICIA TRUJILLO	08/13/2021	22054	110404521	ZUMBA GOLD 7-29-21	$30.00
		08/13/2021	22054	110404521	ZUMBA GOLD 6/3, 6/10	$60.00
		LETICIA TRUJILLO			**Total Check Amount:**	**$90.00**
V45388	TURBO DATA SYSTEMS, INC.	08/13/2021	1472	110212122	HH LEASE TPM JUL 2021	$193.95
		08/13/2021	1472	110212122	CITATION PROC JUL21	$471.55
		TURBO DATA SYSTEMS, INC.			**Total Check Amount:**	**$665.50**

City Disbursement Register

Between Aug 9, 2021 12:00 AM and Aug 13, 2021 11:59 PM

Check #	Vendor Name	Check Date	Vendor #	Budget Unit	Description	Amount
V45389	EDEN TURNER	08/13/2021	21951	110404215	BODY PUMP JULY 2021	$140.00
			EDEN TURNER		**Total Check Amount:**	**$140.00**
V45390	JUANA VENTURA	08/13/2021	17752	110404215	CYCLE JULY 2021	$252.00
			JUANA VENTURA		**Total Check Amount:**	**$252.00**
V45391	VISTA PAINT CORPORATION	08/13/2021	4573	490515151	PAINT	$202.74
		08/13/2021	4573	110515125	CREDIT 3/22/19 PAYMNT	($625.53)
		08/13/2021	4573	490515151	PAINT PROJ - PLUNGE	$189.67
		08/13/2021	4573	490515151	PAINT PROJ-SCOUT CTR	$276.49
			VISTA PAINT CORPORATION		**Total Check Amount:**	**$43.37**
V45392	WALTERS WHOLESALE ELECTRIC	08/13/2021	1667	490515151	ELECTRIC PARTS	$173.07
			WALTERS WHOLESALE ELECTRIC		**Total Check Amount:**	**$173.07**
V45393	WAXIE SANITARY SUPPLY	08/13/2021	3332	110515141	JANITORIAL SUPPLIES	$1,151.80
			WAXIE SANITARY SUPPLY		**Total Check Amount:**	**$1,151.80**
V45394	WESTERN GOLF PROPERTIES, LLC	08/13/2021	29071	465000000	BREA CREEK S/TX JUL21	$1,410.39
		08/13/2021	29071	465515149	BIRCH HLLS MGMT JUL21	$142,875.00
		08/13/2021	29071	465515149	BREA CREEK MGMT JUL21	$58,909.00
		08/13/2021	29071	465000000	BIRCH HLLS TIPS JUL21	$7,805.76
		08/13/2021	29071	465515149	BREA CREEK CGS JUL21	$9,103.50
		08/13/2021	29071	465000000	BIRCH HLLS S/TX JUL21	$5,075.55
		08/13/2021	29071	465515149	BIRCH HILLS CGS JUL21	$21,286.87
			WESTERN GOLF PROPERTIES, LLC		**Total Check Amount:**	**$246,466.07**
V45395	WILLDAN ENGINEERING	08/13/2021	12445	110000000	INSP SVCS FEB 2021	($252.00)
		08/13/2021	12445	110515171	INSP SVCS FEB 2021	$116.00
		08/13/2021	12445	84051517I	INSP SVCS FEB 2021	$1,876.00
			WILLDAN ENGINEERING		**Total Check Amount:**	**$1,740.00**
V45396	YOUNG REMBRANDTS	08/13/2021	15831	110404145	DRAWING CLASSES	$910.00
			YOUNG REMBRANDTS		**Total Check Amount:**	**$910.00**
					Voucher Subtotal	**$1,050,434.37**

TOTAL **$2,121,532.66**

City of Brea

COUNCIL COMMUNICATION

TO: Honorable Mayor and City Council Members

FROM: Bill Gallardo, City Manager

DATE: 08/17/2021

SUBJECT: Monthly Report of Cash Investments for the Successor Agency to the Brea Redevelopment Agency for Period Ended June 30, 2021

RECOMMENDATION

Receive and file.

BACKGROUND/DISCUSSION

The Monthly Report of Cash and Investments is in accordance with Government Code Sections (GCS) 41004 and 53607 and contains information on the Successor Agency's cash and investment activities for the month of June. Funds received by the Successor Agency are typically spent within three to six months, therefore are not invested long-term. The Successor Agency's Local Agency Investment Fund (LAIF) is used for short-term investments and functions like a savings account until funds are required to meet expenditures needs.

Attachment A includes a Cash and Investment Information Summary and a Monthly Account Statement prepared by Chandler Asset Management (Chandler) for the funds invested on behalf of the Successor Agency. As of June 30, 2021, the market value, including accrued interest on the Successor Agency's Local Agency Investment Fund (LAIF), was $18,968.89 in comparison to $18,964.79 at May 31, 2021. The Successor Agency to the Brea Redevelopment Agency has sufficient cash flow to meet its expected expenditures for the next six months.

The Successor Agency also has restricted (fiscal agent) cash and investment accounts related to its various bond reserve accounts which are managed by Chandler and held the Agency's third-party custodian, The Bank of New York Mellon Trust Company, N.A. (BNY) as required. BNY acts as an agent of the Successor Agency and is not a counter party to the investment transaction and all securities are held in the name of the Successor Agency. The custodial accounts have been reconciled to the par value of the applicable portfolio report for the month. Attachment A includes a portfolio report from Chandler for each bond reserve account that is invested. As of June 30, 2021, the market value of these funds, including short-term cash and accrued interest was $13,263,842.74 as compared to $13,263,727.68 as of May 31, 2021.

COMMISSION/COMMITTEE RECOMMENDATION

On July 26, 2021, the Investment Advisory Committee reviewed the Monthly Report of Investments and recommended that the City Council receive and file.

FISCAL IMPACT/SUMMARY

During the month of June, the total value of the Successor Agency to the Brea Redevelopment Agency's investment portfolio increased by $4.10 and the total value of the restricted cash and investments increased by $115.06, both due to market rate adjustments.

RESPECTFULLY SUBMITTED:

William Gallardo, City Manager
Prepared by: Alicia Brenner, Senior Fiscal Analyst
Concurrence: Cindy Russell, Administrative Services Director

Attachments

Attachment A

Successor Agency to the Brea Redevelopment Agency
Cash and Investment Information
June 30, 2021

			Book Value		Market Value*
Demand and Interest-Bearing Checking Accounts		Citizen's Bank	**$ 164,632.15**	**$**	**164,632.15**
Local Agency Investment Fund		LAIF	**$ 18,953.75**	**$**	**18,968.89**
Fiscal Agent Cash & Investments					
2004	Brea Public Financing Authority Lease Revenue Bond	Chandler/BNY	$ 352,343.93	$	352,343.93
2010	Brea Public Financing Authority Lease Revenue Bond	Chandler/BNY	$ 1,035,336.85	$	1,035,336.85
2013	Tax Allocation Bonds	Chandler/BNY	$ 9,477,351.13	$	9,477,351.13
2016	Tax Allocation Refunding Bonds, Series A & B	Chandler/BNY	$ 1,346,388.81	$	1,346,388.81
2017	Tax Allocation Refunding Bonds, Series A & B	Chandler/BNY	$ 1,052,422.02	$	1,052,422.02
	Sub-total - Fiscal Agent Cash & Investments		**$ 13,263,842.74**	**$**	**13,263,842.74**
Grand Total			**$ 13,447,428.64**	**$**	**13,447,443.78**

* Includes accrued interest on invested funds

Successor Agency to the Brea Redevelopment Agency
Cash and Investment Information
June 30, 2021

Fiscal Agent Cash & Investments Detail		Book Value		Market Value
2004 Brea Public Financing Authority Lease Revenue Bond **- CHANDLER**	$	-	$	-
Short-Term Treasury Funds - **BNY**	$	352,343.93	$	352,343.93
Sub-total	**$**	**352,343.93**	**$**	**352,343.93**
2010 Brea Public Financing Authority Lease Revenue Bond **- CHANDLER**	$	-	$	-
Short-Term Treasury Funds - **BNY**	$	1,035,336.85	$	1,035,336.85
Sub-total	**$**	**1,035,336.85**	**$**	**1,035,336.85**
2013 Tax Allocation Bonds - **CHANDLER**	$	-	$	-
Short-Term Treasury Funds - **BNY**	$	9,477,351.13	$	9,477,351.13
Sub-total	**$**	**9,477,351.13**	**$**	**9,477,351.13**
2016 Tax Allocation Refunding Bonds, Series A & B - **CHANDLER**	$	-	$	-
Short-Term Treasury Funds - **BNY**	$	1,346,388.81	$	1,346,388.81
Sub-total	**$**	**1,346,388.81**	**$**	**1,346,388.81**
2017 Tax Allocation Refunding Bonds, Series A & B - **CHANDLER**	$	-	$	-
Short-Term Treasury Funds - **BNY**	$	1,052,422.02	$	1,052,422.02
Sub-total	**$**	**1,052,422.02**	**$**	**1,052,422.02**
Report Grand Total	**$**	**13,263,842.74**	**$**	**13,263,842.74**

Successor Agency to the Brea Redevelopment Agency
Accounting of Cash Receipts, Disbursements and Balances
For the Month of June 2021

Fund	Fund Name	Cash Balance 05/31/21 [1]	Cash Receipts [2]	Cash Disbursements [2]	Cash Balance 06/30/21 [1]
511	PROJECT AREA AB - PERMANENT	39,423.52	-	(1,457.59)	37,965.93
731	PROJECT AREA AB - DEBT SERVICE	1,762,709.46	-	(1,720,395.00)	42,314.46
732	PROJECT AREA C - PERMANENT	(68,565.13)	-	-	(68,565.13)
813	PROJECT AREA C - DEBT SERVICE	169,911.81	-	-	169,911.81
816	REDEVELOP OBLIGATION RETIREMENT	-	-	-	-
Subtotal of Cash and Investments Held in City Funds		1,903,479.66	-	(1,721,852.59)	181,627.07
	DEDUCT				
931	CASH HELD AS INVESTMENTS	(17,067.96)	74.04	(1.00)	(16,994.92)
		1,886,411.70	74.04	(1,721,853.59)	
				Cash Balance per General Ledger as of 06/30/21	**$ 164,632.15**

Reconciliation of Cash Held As Investments in Fund 931	Balance 6/30/2021
Investments Held in LAIF	18,953.75
Unallocated Interest Earnings	(1,958.83)
Investment Balances held in Fund 931	**$ 16,994.92**

[1] Cash balances betweeen funds are subject to change due to accounting 6/30/2020 year-end close.
[2] Cash receipts and disbursements may include accounting entries between funds.

Successor Agency to the Brea RDA LAIF

Account #10166

Portfolio Summary

As of June 30, 2021

ATTACHMENT A

PORTFOLIO CHARACTERISTICS

Average Modified Duration	0.00
Average Coupon	0.25%
Average Purchase YTM	0.25%
Average Market YTM	0.25%
Average S&P/Moody Rating	NR/NR
Average Final Maturity	0.00 yrs
Average Life	0.00 yrs

ACCOUNT SUMMARY

	Beg. Values as of 5/31/21	End Values as of 6/30/21
Market Value	18,954	18,954
Accrued Interest	11	15
Total Market Value	**18,965**	**18,969**
Income Earned	5	4
Cont/WD		0
Par	18,954	18,954
Book Value	18,954	18,954
Cost Value	18,954	18,954

TOP ISSUERS

Local Agency Investment Fund	100.0%
Total	**100.0%**

SECTOR ALLOCATION

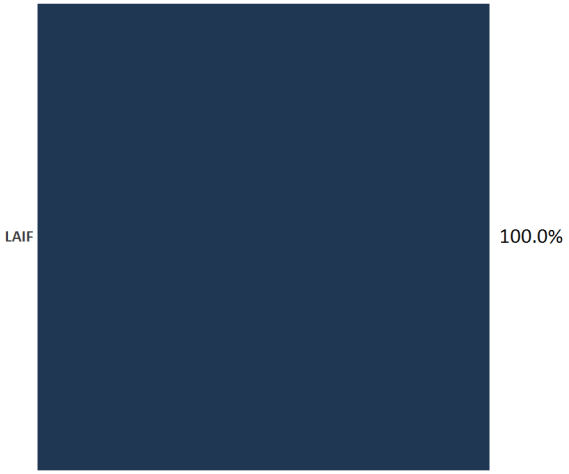

MATURITY DISTRIBUTION

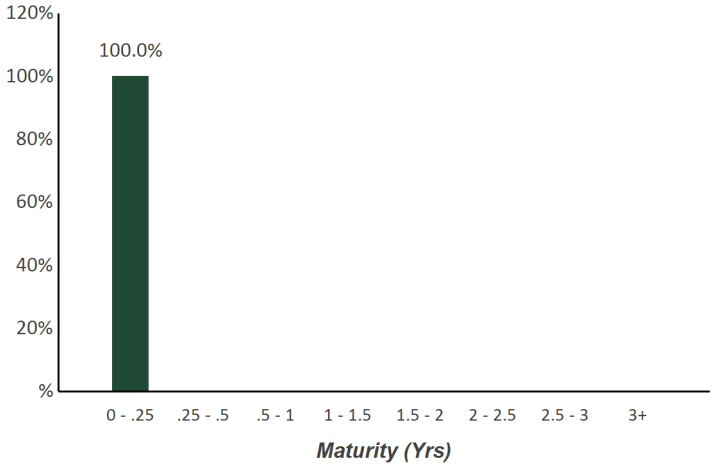

CREDIT QUALITY (S&P)

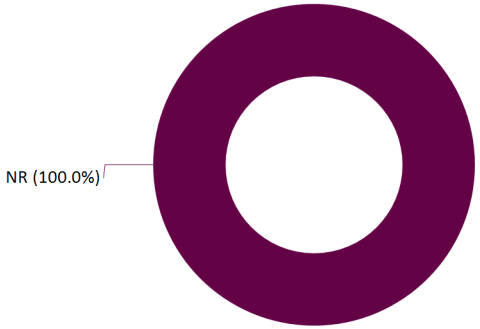

Successor Agency to the Brea RDA LAIF

Account #10166

Holdings Report

As of June 30, 2021

ATTACHMENT A

CUSIP	Security Description	Par Value/Units	Purchase Date Book Yield	Cost Value Book Value	Mkt Price Mkt YTM	Market Value Accrued Int.	% of Port. Gain/Loss	Moody/S&P Fitch	Maturity Duration
LAIF									
90LAIF$00	Local Agency Investment Fund State Pool	18,953.75	Various 0.25%	18,953.75 18,953.75	1.00 0.25%	18,953.75 15.14	100.00% 0.00	NR / NR NR	0.00 0.00
Total LAIF		**18,953.75**	**0.25%**	**18,953.75** **18,953.75**	**0.25%**	**18,953.75** **15.14**	**100.00%** **0.00**	**NR / NR** **NR**	**0.00** **0.00**
TOTAL PORTFOLIO		**18,953.75**	**0.25%**	**18,953.75** **18,953.75**	**0.25%**	**18,953.75** **15.14**	**100.00%** **0.00**	**NR / NR** **NR**	**0.00** **0.00**
TOTAL MARKET VALUE PLUS ACCRUED						**18,968.89**			

Successor Agency to the Brea RDA LAIF

Account #10166

Income Earned

As of June 30, 2021

CUSIP	Security Description	Trade Date Settle Date Units	Book Value: Begin Book Value: Acq Book Value: Disp Book Value: End	Prior Accrued Inc. Received Ending Accrued Total Interest	Accr. Of Discount Amort. Of Premium Net Accret/Amort Income Earned	Total Income
LOCAL AGENCY INVESTMENT FUND						
90LAIF$00	Local Agency Investment Fund	Various	18,953.75	11.04	0.00	4.10
	State Pool	Various	0.00	0.00	0.00	
		18,953.75	0.00	15.14	0.00	
			18,953.75	4.10	4.10	
			18,953.75	**11.04**	**0.00**	
			0.00	**0.00**	**0.00**	
			0.00	**15.14**	**0.00**	
Total Local Agency Investment Fund		**18,953.75**	**18,953.75**	**4.10**	**4.10**	**4.10**
			18,953.75	**11.04**	**0.00**	
			0.00	**0.00**	**0.00**	
			0.00	**15.14**	**0.00**	
TOTAL PORTFOLIO		**18,953.75**	**18,953.75**	**4.10**	**4.10**	**4.10**

Successor Agency to the Brea RDA LAIF

Account #10166

Cash Flow Report

As of June 30, 2021

Payment Date	Transaction Type	CUSIP	Quantity	Security Description	Principal Amount	Income	Total Amount
07/15/2021	Dividend	90LAIF$00	1,724,481.05	Local Agency Investment Fund State Pool	0.00	14.26	14.26
JUL 2021					**0.00**	**14.26**	**14.26**
TOTAL					**0.00**	**14.26**	**14.26**

Important Disclosures

Chandler Asset Management, Inc. ("Chandler") is an SEC registered investment adviser. For additional information about our firm, please see our current disclosures (Form ADV). To obtain a copy of our current disclosures, you may contact your client service representative by calling the number on the front of this statement or you may visit our website at www.chandlerasset.com.

Information contained in this monthly statement is confidential and is provided for informational purposes only and should not be construed as specific investment or legal advice. The information contained herein was obtained from sources believed to be reliable as of the date of this statement, but may become outdated or superseded at any time without notice.

Custody: Your qualified custodian bank maintains control of all assets reflected in this statement and we urge you to compare this statement to the one you receive from your qualified custodian. Chandler does not have any authority to withdraw or deposit funds from/to the custodian account.

Valuation: Prices are provided by IDC, an independent pricing source. In the event IDC does not provide a price or if the price provided is not reflective of fair market value, Chandler will obtain pricing from an alternative approved third party pricing source in accordance with our written valuation policy and procedures. Our valuation procedures are also disclosed in Item 5 of our Form ADV Part 2A.

Performance: Performance results are presented gross-of-advisory fees and represent the client's Total Return. The deduction of advisory fees lowers performance results. These results include the reinvestment of dividends and other earnings. Past performance may not be indicative of future results. Therefore, clients should not assume that future performance of any specific investment or investment strategy will be profitable or equal to past performance levels. All investment strategies have the potential for profit or loss. Economic factors, market conditions or changes in investment strategies, contributions or withdrawals may materially alter the performance and results of your portfolio.

Source ice Data Indices, LLC ("ICE"), used with permission. ICE PERMITS USE OF THE ICE INDICES AND RELATED DATA ON AN "AS IS" BASIS; ICE, ITS AFFILIATES AND THEIR RESPECTIVE THIRD PARTY SUPPLIERS DISCLAIM ANY AND ALL WARRANTIES AND REPRESENTATIONS, EXPRESS AND/OR IMPLIED, INCLUDING ANY WARRANTIES OF MERCHANTABILITY OR FITNESS FOR A PARTICULAR PURPOSE OR USE, INCLUDING THE INDICES, INDEX DATA AND ANY DATA INCLUDED IN, RELATED TO, OR DERIVED THEREFROM. NEITHER ICE DATA, ITS AFFILIATES OR THEIR RESPECTIVE THIRD PARTY PROVIDERS GUARANTEE THE QUALITY, ADEQUACY, ACCURACY, TIMELINESS OR COMPLETENESS OF THE INDICES OR THE INDEX DATA OR ANY COMPONENT THEREOF, AND THE INDICES AND INDEX DATA AND ALL COMPONENTS THEREOF ARE PROVIDED ON AN "AS IS" BASIS AND LICENSEE'S USE IS AT LICENSEE'S OWN RISK. ICE DATA, ITS AFFILIATES AND THEIR RESPECTIVE THIRD PARTY DO NOT SPONSOR, ENDORSE, OR RECOMMEND CHANDLER, OR ANY OF ITS PRODUCTS OR SERVICES.

Index returns assume reinvestment of all distributions. Historical performance results for investment indexes generally do not reflect the deduction of transaction and/or custodial charges or the deduction of an investment management fee, the incurrence of which would have the effect of decreasing historical performance results. It is not possible to invest directly in an index.

Ratings: Ratings information have been provided by Moody's, S&P and Fitch through data feeds we believe to be reliable as of the date of this statement, however we cannot guarantee its accuracy.

Security level ratings for U.S. Agency issued mortgage-backed securities ("MBS") reflect the issuer rating because the securities themselves are not rated. The issuing U.S. Agency guarantees the full and timely payment of both principal and interest and carries a AA+/Aaa/AAA by S&P, Moody's and Fitch respectively.

City of Brea

COUNCIL COMMUNICATION

TO: Honorable Mayor and City Council Members

FROM: Bill Gallardo, City Manager

DATE: 08/17/2021

SUBJECT: Annual Review of Statement of Investment Policy for the City of Brea/Successor Agency to the Brea Redevelopment Agency

RECOMMENDATION

Review and approve the City of Brea/Successor Agency to the Brea Redevelopment Agency Statement of Investment Policy.

BACKGROUND/DISCUSSION

State law allows the City Council to annually adopt the Statement of Investment Policy. Thus, per the City's fiscal policies, "The City Council will review and adopt annually an investment policy as recommended by the Investment Advisory Committee." The Investment Policy serves as a guideline for the investment of City and Successor Agency funds. The Brea Investment Advisory Committee annually reviews the Statement of Investment Policy for the City of Brea and the Successor Agency to the Brea Redevelopment Agency.

The below changes and additions were recommended by Chandler Asset Management, the City's Portfolio Manager, and were reviewed by the Investment Advisory Committee (IAC). The City's current investment policy takes advantage of the maximum allowable allocation in the Government Code for permitted investments such as Medium Term Corporate Notes, Pass Thru Securities, Bankers Acceptances, Money Market Funds, etc. Additionally, SB 998 provides updates regarding investment in zero or negative interest accrual investments. These changes were recommend by Chandler in order for the City's Investment Policy to be consistent with the passing of SB 988, which went into effect January 1, 2021.

1. Investment Instruments Section (Commercial Paper) – Update the language related to the maximum allowable allocation to Commercial Paper. SB 998 allows public agencies with more $100,000,000 of investable assets to increase the percent of portfolio invested in commercial paper to 40%. This provision is set to expire on January 1, 2026 (page 3). However, at the Investment Advisory Committee Meeting on July 26, 2021, the Committee recommended that the maximum allocation to Commercial Paper remain at its current allocation of 25%. Therefore, this change has since then been removed from the policy.
2. Prohibited Investments Section (zero or negative interest accrual investments) – SB 998 Authorizes a local agency to invest in securities issued or backed by the United States government that could result in zero- or negative- interest accrual if held to maturity. Currently, zero and negative interest rate policies are currently being adopted by multiple developed market central banks:

a. US Federal Reserve Fed Funds Policy Rate: 0.00% to 0.25%
b. European Central Bank Policy Rate: -0.50%
c. Bank of Japan Policy Rate: -0.10%

Existing law generally prohibits a local agency from investing any funds that could result in zero interest accrual if held to maturity. The amendment accommodates the possibility of a negative yield investment environment, if it should occur like it has in other developed countries. Leaving the funds in the bank may also result in a zero- or negative- interest accrual because of additional fees and penalties applied to large deposits and banks may also limit the size of deposits that can be held in an account in a negative yield environment because they are no longer profitable. The change requested is to adopt SB 998 as a risk mitigation tool. The base case does not call for a negative rate policy in the US; however, with rates already pegged close to zero, the policy tool cannot be ruled out. The language added to the policy also includes language that zero or negative interest securities, "will only be permitted in the portfolio in the event the United States Federal Reserve adopts a negative interest rate monetary policy framework" and "notification to the City Council , the Investment Advisory Committee, the City Treasurer, and the Administrative Services Director will be given within two (2) business days when securities of this type are being added to the portfolio." (page 4). The IAC agreed with this recommendation and this change has been included in the proposed policy.

Also, references throughout the Investment Policy to the Revenue and Budget Manager have changed to reflect the revised position to Financial Services Manager. This title change was approved by the City Council with the adoption of the FY 2021-22 Budget. These changes were approved by the IAC and included in the proposed policy.

For ease of reference, the current Investment Policy is attached along with the red-lined version with recommended changes. In addition, a clean version with the recommended changes is also attached.

COMMISSION/COMMITTEE RECOMMENDATION

The Investment Advisory Committee reviewed this item at their July 26, 2021 meeting and it was recommended for City Council approval.

FISCAL IMPACT/SUMMARY

There is no fiscal impact from the adoption of the Statement of Investment Policy.

RESPECTFULLY SUBMITTED:

William Gallardo, City Manager
Prepared by: Faith Madrazo, Financial Services Manager
Concurrence: Cindy Russell, Administrative Services Director

Attachments

Current Investment Policy - Adopted 8/18/20
Proposed Final Investment Policy - Redlined Version
Proposed Final Investment Policy - Clean Version

City Of Brea / Successor Agency to the Brea Redevelopment Agency

STATEMENT OF INVESTMENT POLICY
August 18, 2020

Purpose: This statement is intended to provide a guideline for the prudent investment of funds and to outline the policies for maximizing the efficiency of the City of Brea and Successor Agency to the Brea Redevelopment Agency ("City") cash management system. The ultimate goal is to enhance the economic status of the City while protecting its pooled funds. This investment policy has been prepared so as to be in conformance with all pertinent existing laws of the State of California for General Law cities.

Objective: The cash management system of the City is designed to accurately monitor and forecast expenditures and revenues, thus enabling the City to invest funds to the fullest extent possible. The City attempts to obtain a market rate of return without incurring undue risk to principal. The objectives of such investments are: 1) preserve capital, 2) maintain financial flexibility/liquidity, and 3) obtain a competitive rate of return on the City's investments.

Scope: This investment policy applies to the decisions and activities of the City with regard to investing the financial assets of all funds, including the following: General Fund, Special Revenue Funds, Assessment Funds, Enterprise Funds, Internal Service Funds, Capital Projects Funds, Debt Service Funds, Reserve Funds, Trust and Agency Funds, and any other funds that may be created from time to time. This policy does not apply retiree health care savings/trust/plan(s) or deferred compensation plans.

Investment Responsibility: Investment decisions of the City funds are the responsibility of the City Treasurer and/or Administrative Services Director, and shall comply with the Investment Policy of the City. These responsibilities include the authority to open accounts with banks, brokers and dealers, establish safekeeping accounts or other arrangements for the custody of securities and to execute such documents as may be necessary.

Those authorized to execute transactions for the City include the: 1) City Treasurer, 2) Administrative Services Director, 3) Revenue and Budget Manager, and 4) those specifically deputized by the City Treasurer and Administrative Services Director with said authorization to be filed with the City Clerk. The City Treasurer and Administrative Services Director shall insure that an authorized person is available at all times to execute the City's investments. Investment managers, brokers and dealers are to be provided with a list of specified names of those persons authorized to execute transactions. The City Council may authorize the delegation of investments to an outside investment manager.

Reporting: The Administrative Services Director shall be responsible for reporting the status of investments to the City Council and City Manager on a monthly basis. These reports will disclose, at a minimum, the following information about the characteristics of the City's portfolio:

A. An asset listing showing par value, cost and accurate and complete market value of each security, type of investment, issuer, and interest rate.

B. Monthly transactions for the period.
C. A one-page summary report that shows:
    1. Average maturity of the portfolio and modified duration of the portfolio;
    2. Maturity distribution of the portfolio;
    3. Average portfolio credit quality; and,
    4. Time-weighted total rate of return for the portfolio for the prior one month, three months, twelve months, year to date, and since inception compared to the City's market benchmark returns for the same periods;
D. A statement of compliance with investment policy, including a schedule of any transactions or holdings which do not comply with this policy or with the California Government Code, including a justification for their presence in the portfolio and a timetable for resolution.
E. A statement that the City has adequate funds to meet its cash flow requirements for the next six months.

Reports are to be submitted to the City Council and City Manager by the 3rd City Council meeting following the end of the reporting month.

The Investment Advisory Committee will review the status of investments on a quarterly basis. These reports shall include the type of investment, institution, face amount, market value, book value, interest rate, date of maturity, compliance to the investment policy.

If the City has an outside Investment Manager, the Investment Manager shall periodically report on the activity and results of the funds being managed by the Investment Manager. Additionally, the Investment Manager shall notify the Investment Advisory Committee when investment portfolios demonstrate low performance, if any, which occurs between each periodic report.

Prudence: The standard of prudence to be applied by the City Treasurer, Administrative Services Director, Revenue and Budget Manager, and those specifically deputized by the City Treasurer and Administrative Services Director with said authorization to be filed with the City Clerk shall be the "prudent investor" standard, as defined under Government Code Section 53600.3 which states, "When investing, reinvesting, purchasing, acquiring, exchanging, selling, or managing public funds, a trustee shall act with care, skill, prudence, and diligence under the circumstances then prevailing, including, but not limited to, the general economic conditions and the anticipated needs of the City, that a prudent person acting in a like capacity and familiarity with those matters would use in the conduct of funds of a like character and with like aims, to safeguard the principal and maintain the liquidity needs of the City/Successor Agency to the Brea Redevelopment Agency. Within the limitations of this section and considering individual investments as part of an overall strategy, investments may be acquired as authorized by law."

Ethics and Conflicts of Interest: Officers and employees involved in the City investment process shall refrain from personal business activity that could conflict with proper execution of the investment program or which could impair their ability to make impartial investment decisions. City employees and investment officials shall disclose any material financial interests in financial institutions that conduct business within the City, and they shall further disclose any personal financial/investment positions that could be related to the performance of the City's portfolio. City employees and officers shall refrain

from undertaking personal investment transactions with the same individual with whom business is conducted on behalf of the City.

Investment Instruments: Funds of the City may be invested in any instrument allowable under current legislation of the State of California (Government Code Section 53600 et sec.) so long as the investment is appropriate and consistent with this Investment Policy taking into consideration the City's investment objectives. Investment instruments may include:

- U.S. Treasury Obligations (Bills, Notes and Bonds)
- U.S. Government Agency Securities and Instrumentality's of Government Sponsored Corporations, including a maximum of 5% in callable bonds issued by such agencies
- Banker's Acceptances
- Commercial Paper
- Repurchase Agreements (requires a master repurchase agreement to be signed and on file with the bank or broker/dealer)
- Certificates of Deposit
- Negotiable Certificates of Deposit
- Passbook Savings Accounts
- Interest Bearing Checking Accounts
- Medium Term Corporate Notes
- Bank Money Market Accounts
- Local Agency Investment Fund (State Pool)
- County of Orange Investment Fund (County Pool)
- Other investments that are, or may become, legal investments through the State of California Government Code.

Provisions of Government Code Section 53601 shall be adhered to at all times. This includes, but is not limited to, the following restrictions:

- Bankers Acceptances cannot exceed 40% of the portfolio nor exceed 180 days;
- Commercial Paper cannot exceed 25% of the portfolio. Commercial Paper must be rated P-1 (Moody's), A-1 (Standard & Poor's) and cannot exceed 270 days;
- Money Market Funds cannot exceed 20% of the portfolio;
- Medium Term Corporate Notes cannot exceed 30% of the portfolio and must carry a minimum A rating;
- Pass-through securities including Collateralized Mortgage Obligations cannot exceed 20% of the portfolio.
    - Asset Backed Securities are limited to a maximum of 10% of the portfolio at time of purchase
        - Maximum maturity of 5 years
        - Asset Backed Security must be rated AA or higher
- Supranational Securities must be rated AA or higher, cannot exceed 15% of the portfolio and no more than 5% of portfolio per issuer. The maximum maturity cannot exceed 5 years.
- Additionally, the City will use the guidelines established by the joint committee of the California Municipal Treasurers Association and the California Society of Municipal Finance Officers as the basis for investing in government investment pools.

For purposes of complying with legal investment limitations, the percentage references pertaining to the above refers to the maturity value of the portfolio at the time of purchase.

If a security owned by the City is downgraded to a level below the requirements of this policy, making the security ineligible for additional purchases, the following steps will be taken:

- Any actions taken related to the downgrade by the investment manager will be communicated to the City Council, the Investment Advisory Committee, City Treasurer and the Administrative Services Director within two (2) business days.

- If a decision is made to retain the security, the credit situation will be monitored and reported to the City Council.

Prohibited Investments: The City shall not invest any funds in derivatives, inverse floaters, range notes, or interest- only strips that are derived from a pool of mortgages. The City shall not invest any funds in any security that could result in a zero interest accrual if held to maturity.

Collateralization: Collateralization shall be required on two types of investments: Certificates of deposit and repurchase (and reverse repurchase) agreements. A collateral agreement must be current and on file before any funds can be transferred for collateralized certificates of deposit.

Collateral shall be held by an independent third party with whom the City has a current written custodial agreement. A clearly marked evidence of ownership (safekeeping receipt) must be supplied to the City and retained. The right of collateral substitution is granted in accordance with the following requirements:

A. Certificates of Deposit
   1. Government securities used as collateral require one hundred and ten (110) percent of market value to the face amount of the deposit
   2. Promissory notes secured by first trust deeds used as collateral require one hundred and fifty (150) percent of market value to the face amount of the deposit
   3. Irrevocable letters of Credit issued by the Federal Home Loan Bank of San Francisco require one hundred and five (105) percent of market value to the face amount of the deposit

B. Repurchase and Reverse Repurchase Agreements
   1. Only U.S. Treasury securities or federal agency securities are acceptable collateral. All securities underlying repurchase agreements must be delivered to the City's custodian bank versus payment or be handled under a properly executed tri-party repurchase agreement. The total market value of all collateral for each repurchase agreement must equal or exceed one hundred and two (102) percent of the total dollar value of the money invested by the City for the term of the investment. For any repurchase agreement with a term of more than one (1) day, the value of the underlying securities must be reviewed on an ongoing basis according to market conditions.

Market value must be calculated each time there is a substitution of collateral.

2. The City or its trustee shall have perfected first security interest under the Uniform Commercial Code in all securities subject to a repurchase agreement.

Investment Criteria: Criteria for selecting investments and the order of priority are:

A. Safety

The safety and risk associated with an investment refers to the potential loss of principal, interest or a combination of these amounts. The City only operates in those investments that are considered very safe.

B. Liquidity

This refers to the ability to convert an investment into cash at any moment in time with a minimal chance of losing some portion of principal or interest. Liquidity is an important investment quality when there is an occasional need for funds. The potential fluctuations in market value and the expected future availability of reasonable bids in the market are to be important considerations when selecting an investment.

C. Yield

Yield is the potential dollar earnings an investment can provide and sometimes is described as the rate of return.

Diversification: The City will diversify the use of investment instruments to avoid incurring unreasonable risks inherent in over-investing in specific instruments, or individual financial institutions. In no case, without prior notification and approval from the City Council, shall the amount invested in one entity at the time of purchase exceed 5% of the total portfolio, with the following exceptions:

- U.S. Federal Government Agency Obligations of one specific entity cannot exceed 25% of the maturity value of the portfolio at the time of purchase.
- U.S. Treasury Obligations (Treasury Bills, Treasury Strips, Bonds, Notes) directly backed by the full faith and credit of the United States for payment of principal and interest shall not be subject to a maximum percentage of the portfolio.
- Approved State and County investment pools together cannot exceed 60% of the maturity value of the portfolio at the time of purchase, and no more than 40% of the maturity value at the time of purchase can be deposited in any one particular pool.

Investment Pools: The City Treasurer, Administrative Services Director and City Council have determined that use of investment pools is a practical investment option. The City will utilize guidelines established by the California Municipal Treasurers Association and California Society of Municipal Finance Officers to ensure the safety of investment pools which includes a thorough investigation of the pool/fund prior to investing, and on a continual basis. There shall be a questionnaire developed which will answer the following general questions:

- A description of eligible investment securities, and a written statement of investment policy and objectives.
- A description of interest calculations and how it is distributed, and how gains and

losses are treated.

- A description of how the securities are safeguarded (including the settlement processes), and how often the securities are priced and the program audited.
- A description of who may invest in the program, how often, what size deposit and withdrawal are allowed.
- A schedule for receiving statements and portfolio listings.
- Are reserves, retained earnings, etc. utilized by the pool/fund?
- A fee schedule, and when and how is it assessed.
- Is the pool/fund eligible for bond proceeds and/or will it accept such proceeds?

Maturity Limitations: Every investment instrument purchased must have a term remaining to maturity of less than five years, unless the investment is for the Senior Low Cost Housing Subsidy Program, bond proceeds for the Reserve Fund, funded/capitalized interest fund; or the City Council has granted express authority to make that investment, either specifically or as part of an investment program approved by the City Council no more than three months prior to the investment. When possible, a minimum of 25% of the portfolio should be in maturities of one year or less.

Safekeeping and Custody: All security transactions, including collateral for repurchase agreements, entered into by the City shall be conducted on a delivery-versus-payment (DVP) basis which ensure that securities are deposited in an eligible financial institution prior to the release of funds. Securities shall be held by a third-party custodian designated by the City and evidenced by safekeeping receipts with a written custodial agreement. The only exception to the foregoing shall be depository accounts and securities purchases made with: LAIF, direct time certificates of deposit and money market mutual funds, since the purchased securities are not deliverable. Settlement instructions sent to the safekeeping agent shall require authorization.

Monthly trust statements are reconciled to the Investment Reports by the City's Accountant. The City's Accountant performs reconciliation of the monthly bank statements. The periodic review of the investment portfolio, including investment types, purchase price, market values, maturity dates, and investment yields as well as conformance to the stated investment policy will be performed by the Investment Advisory Committee.

Qualified Broker/Dealers: For those investments managed directly by the City, the City shall maintain a listing of broker/dealers that are approved by the Investment Advisory Committee for investment purposes. All broker/dealers who desire to bid for investment transactions must supply the City with the following information; a completed broker/dealer questionnaire, audited financial statements, proof of National Association of Security Dealers' certification, trading resolution, proof of California registration, and certification of having read the City of Brea's investment policy.

The Investment Advisory Committee will conduct an annual review of the qualified broker/dealers. The decision to add or subtract from the authorized list of broker/dealers will be based on many factors to include, but not limited to, products offered, service levels, references, etc. No single factor will determine the Committee's final decision. A current audited financial statement is required to be on file for each broker/dealer with which the City of Brea invests. The City's authorized brokers/dealers shall provide written

confirmation of having read and understood the City's investment policy and that all investments recommended by them will be suitable for the City of Brea.

Selection of broker/dealers used by an external investment adviser retained by the City will be at the sole discretion of the adviser. Where possible, transactions with broker/dealers shall be selected on a competitive basis and their bid or offering prices shall be recorded. If there is no other readily available competitive offering, best efforts will be made to document quotations for comparable or alternative securities. When purchasing original issue instrumentality securities, no competitive offerings will be required as all dealers in the selling group offer those securities at the same original issue price.

Monitoring and Adjusting the Portfolio: The City Treasurer and Administrative Services Director will routinely monitor the contents, performance and risk profile of the investment portfolio, the investment alternatives, and the relative values of competing investment instruments and will adjust the portfolio accordingly based on the approved Statement of Investment Policy on a quarterly basis. The City Council shall also bear a responsibility for monitoring the implementation of this policy and the safeguarding of the City's Treasury.

Performance Standards: The investment portfolio shall be designed to attain a market-average rate of return throughout budgetary and economic cycles, taking into account the City's risk constraints, the cash flow characteristics of the portfolio, and state and local laws, ordinances or resolutions that restrict investments.

The Administrative Services Director shall monitor and evaluate the portfolio's performance relative to market benchmark, which will be included in the monthly report of investments. The Treasurer and Administrative Services Director shall select an appropriate, readily available index to use as a market benchmark.

Bond Funds/Arbitrage: The U.S. Tax Reform Act of 1986 requires the City to perform annual arbitrage calculations and rebate excess earnings from investments of proceeds of bond issues sold after the effective date of this law to the U.S. Treasury. This arbitrage calculation may be contracted with an outside source to provide the necessary technical assistance to comply with this regulation. Funds subject to the 1986 Tax Reform Act will be kept segregated from other funds and records will be kept in a fashion to facilitate the calculations. The City's investment position relative to the new arbitrage restrictions is to continue pursuing the maximum yield on applicable investments while ensuring the safety of capital and liquidity. It is a fiscally sound position to continue maximization of yield and to rebate excess earnings, if necessary.

Review/or Modification: The Investment Advisory Committee shall be responsible for reviewing and recommending modifications to the Statement of Investment Policy and submitting it to the City Council for approval on an annual basis. However, the City Treasurer and Administrative Services Director may, at any time, further restrict the investments approved for purchase as deemed appropriate.

Internal Controls: The City Treasurer and Administrative Services Director shall organize the investment function so that specific responsibility for the performance of duties is assigned with a clear line of authority and reporting. The functions of authorizing,

executing and recording transactions, custody of investments and performing reconciliation's will be handled by separate persons to reduce the risk that anyone person is in a position to conceal errors or fraud in the normal course of duty. While no internal control system, however elaborate, can guarantee absolute assurance that the City's assets are safeguarded, it is the intent of the City's internal control system to provide reasonable assurance that management of the investment function meets the City's objectives. These internal controls shall be reviewed annually by the independent auditor who shall review and comment upon the content of this policy, the effectiveness of its implementation and applicable management controls with regard to its implementation and the safeguarding of the City's Treasury funds.

Investment Advisory Committee: An Investment Advisory Committee ("Committee") is established to review and make recommendations on the Investment Policy and investment strategy of the City of Brea/Successor Agency to the Brea Redevelopment Agency and to strengthen the internal control of the management of the City's funds. The following are the duties and responsibilities of the Committee:

A. Purpose
   1. To review and make recommendations on investment policy and investment strategy of the City of Brea/Successor Agency to the Brea Redevelopment Agency.
   2. To review the City's investments on a periodic basis and to recommend any exceptions and/or changes to the policy, to the City Council for review and approval.

B. Composition of Committee
   1. City Treasurer
   2. City Council Member, who serves as the Chair (selected by the City Council)
   3. Administrative Services Director
   4. Revenue and Budget Manager
   5. Three (3) Brea Citizens (selected by the City Council with the City Treasurer as subcommittee members)

C. Functions
   1. Annually (or as needed)
      a. To review and approve Statement of Investment Policy
      b. To review the financial condition and registrations of qualified broker/dealers (Only required when investments are managed by the City)

   2. Monthly or Quarterly
      a. To review the City's investments
      b. To recommend any modifications to the Investment Policy
      c. To develop and carry out the ongoing investment strategy in accordance with the Investment Policy
      d. To provide a status report at a study session of the City Council as requested

The function of the Committee is not to inhibit the daily operation of the Administrative Services Department, but to provide policy guidelines within which to work on a day-to-day basis. By this, it is meant that each individual trade need not be approved by the Committee at the time it is transacted provided that it falls within the scope of the Statement of Investment Policy.

Disclosure: Members of the Committee shall be required to comply with the Fair Political Practices Act reporting requirements (Form 700) on an annual basis and submit filings to the City Clerk's Office.

SEGREGATION OF RESPONSIBILITIES
(External)

FUNCTION	RESPONSIBILITY
Develop formal Statement of Investment Policy	Administrative Services Director Revenue and Budget Manager
Recommend modifications to Investment Policy	City Treasurer Administrative Services Director Revenue and Budget Manager
Review formal Statement of Investment Policy and recommend a Council action	City Treasurer Investment Advisory Committee
Adopt formal Statement of Investment Policy	City Council
Select investments	Outside Investment Manager
Execute investment transactions and fax or email completed trade information to City	Outside Investment Manager
Review transactions for compliance with investment policy	City Treasurer Administrative Services Director or Revenue and Budget Manager
Investment verification (match broker confirmation to trade information provided by outside Investment Manager to City investment records)	Administrative Services Director or Revenue and Budget Manager
Record investment transactions into City's accounting records	City Accountant
Reconcile investment records to accounting records and bank statements and report any variances to Administrative Services Director and City Treasurer	City Accountant
Security	All investment securities will be held in safekeeping in the trust department of the City's Depository Bank, or other third party custodian as designated by the City Treasurer or Administrative Services Director.

SEGREGATION OF RESPONSIBILITIES
(Internal)

FUNCTION	RESPONSIBILITY
Develop formal Statement of Investment Policy	City Treasurer Administrative Services Director Revenue and Budget Manager
Recommend modifications to Statement of Investment Policy	City Treasurer Administrative Services Director Revenue and Budget Manager Investment Advisory Committee
Review formal Statement of Investment Policy and recommend City Council action	Investment Advisory Committee
Annually review and adopt a formal Statement of Investment Policy	City Council
Select investments	Administrative Services Director or Revenue and Budget Manager
Approve transactions	Administrative Services Director
Execute investment transactions	Administrative Services Director
Investment verification (match broker confirmation to City investment records)	Administrative Services Director or Revenue and Budget Manager
Record investment transactions into City's accounting records	City Accountant
Reconcile investment records to accounting records and bank statements and report any variances to the Administrative Services Director	City Accountant
Security	All investment securities will be held in safekeeping in the trust department of the City's Depository Bank, or other third party custodian as designated by the City Treasurer or Administrative Services Director

GLOSSARY OF INVESTMENTS TERMS

AGENCIES: Shorthand market terminology for any obligation issued by *a government-sponsored entity (GSE),* or a *federally related institution*. Most obligations of GSEs are not guaranteed by the full faith and credit of the US government. Examples are:

FFCB: The Federal Farm Credit Bank System provides credit and liquidity in the agricultural industry. FFCB issues discount notes and bonds.

FHLB: The Federal Home Loan Bank provides credit and liquidity in the housing market. FHLB issues discount notes and bonds.

FHLMC: Like FHLB, the Federal Home Loan Mortgage Corporation provides credit and liquidity in the housing market. FHLMC, also called "Freddie MacFreddieMac" issues discount notes, bonds and mortgage pass-through securities.

FNMA: Like FHLB and Freddie MacFreddieMac, the Federal National Mortgage Association was established to provide credit and liquidity in the housing market. FNMA, also known as "Fannie MaeFannieMae," issues discount notes, bonds and mortgage pass-through securities.

GNMA: The Government National Mortgage Association, known as "Ginnie MaeGinnieMae," issues mortgage pass-through securities, which are guaranteed by the full faith and credit of the US Government.

PEFCO: The Private Export Funding Corporation assists exporters. Obligations of PEFCO are not guaranteed by the full faith and credit of the US government.

TVA: The Tennessee Valley Authority provides flood control and power and promotes development in portions of the Tennessee, Ohio, and Mississippi River valleys. TVA currently issues discount notes and bonds.

ASSET BACKED SECURITIES: Securities supported by pools of installment loans or leases or by pools of revolving lines of credit.

AVERAGE LIFE: In mortgage-related investments, including CMOs, the average time to expected receipt of principal payments, weighted by the amount of principal expected.

BANKER'S ACCEPTANCE: A money market instrument created to facilitate international trade transactions. It is highly liquid and safe because the risk of the trade transaction is transferred to the bank which "accepts" the obligation to pay the investor.

BENCHMARK: A comparison security or portfolio. A performance benchmark is a partial market index, which reflects the mix of securities allowed under a specific investment policy.

BROKER: A broker brings buyers and sellers together for a transaction for which the broker receives a commission. A broker does not sell securities from his own position.

CALIFORNIA MUNICIPAL TREASURERS ASSOCIATION (CMTA): Is the professional society of active public treasurers of California counties, cities and special districts. It sets ethical standards for the treasury profession in state and local governments in California.

CALIFORNIA SOCIETY OF MUNICIPAL FINANCE OFFICERS (CSMFO): Is a professional association of state, county and local government finance officers in

California. CSMFO is the statewide organization serving all of California municipal finance professionals, an affiliate of the nationwide Government Finance Officers Association (GFOA).

CALLABLE: A callable security gives the issuer the option to call it from the investor prior to its maturity. The main cause of a call is a decline in interest rates. If interest rates decline, the issuer will likely call its current securities and reissue them at a lower rate of interest.

CERTIFICATE OF DEPOSIT (CD): A time deposit with a specific maturity evidenced by a certificate.

CERTIFICATE OF DEPOSIT ACCOUNT REGISTRY SYSTEM (CDARS): A private placement service that allows local agencies to purchase more than $250,000 in CDs from a single financial institution (must be a participating institution of CDARS) while still maintaining FDIC insurance coverage. CDARS is currently the only entity providing this service. CDARS facilitates the trading of deposits between the California institution and other participating institutions in amounts that are less than $250,000 each, so that FDIC coverage is maintained.

COLLATERAL: COLLATERAL. Securities or cash pledged by a borrower to secure repayment of a loan or repurchase agreement. Also, securities pledged by a financial institution to secure deposits of public monies.

COLLATERALIZED BANK DEPOSIT: A bank deposit that is collateralized at least 100% (principal plus interest to maturity). The deposit is collateralized using assets set aside by the issuer such as Treasury securities or other qualified collateral to secure the deposit in excess of the limit covered by the Federal Deposit Insurance Corporation.

COLLATERALIZED MORTGAGE OBLIGATION (CMO): Classes of bonds that redistribute the cash flows of mortgage securities (and whole loans) to create securities that have different levels of prepayment risk, as compared to the underlying mortgage securities.

COLLATERIALIZED TIME DEPOSIT: Time deposits that are collateralized at least 100% (principal plus interest to maturity). These instruments are collateralized using assets set aside by the issuer such as Treasury securities or other qualified collateral to secure the deposit in excess of the limit covered by the Federal Deposit Insurance Corporation.
PAPER: The short-term unsecured debt of corporations.

COUPON: The rate of return at which interest is paid on a bond.

CREDIT RISK: The risk that principal and/or interest on an investment will not be paid in a timely manner due to changes in the condition of the issuer.
A dealer acts as a principal in security transactions, selling securities from and buying securities for his own position.

DEBENTURE: A bond secured only by the general credit of the issuer.
VS. PAYMENT (DVP): A securities industry procedure whereby payment for a security must be made at the time the security is delivered to the purchaser's agent.

DERIVATIVE: Any security that has principal and/or interest payments which are subject

to uncertainty (but not for reasons of default or credit risk) as to timing and/or amount, or any security which represents a component of another security which has been separated from other components ("Stripped" coupons and principal). A derivative is also defined as a financial instrument the value of which is totally or partially derived from the value of another instrument, interest rate, or index.

The difference between the par value of a bond and the cost of the bond, when the cost is below par. Some short-term securities, such as T-bills and banker's acceptances, are known as discount securities. They sell at a discount from par and return the par value to the investor at maturity without additional interest. Other securities, which have fixed coupons, trade at a discount when the coupon rate is lower than the current market rate for securities of that maturity and/or quality.

DISCOUNT SECURITIES: Non-interest bearing money market instruments that are issued a discount and redeemed at maturity for full face value *(e.g., U.S. Treasury Bills.)*

DIVERSIFICATION: Dividing investment funds among a variety of investments to avoid excessive exposure to any one source of risk.

DURATION: The weighted average time to maturity of a bond where the weights are the present values of the future cash flows. Duration measures the price sensitivity of a security to changes interest rates.

FEDERAL CREDIT AGENCIES: Agencies of the Federal government set up to supply credit to various classes of institutions and individuals, *e.g.*, S&L's, small business firms, students, farmers, farm cooperatives, and exporters.

FEDERAL DEPOSIT INSTURANCE CORPORATION (FDIC): The Federal Deposit Insurance Corporation (FDIC) is an independent federal agency insuring deposits in U.S. banks and thrifts in the event of bank failures. The FDIC was created in 1933 to maintain public confidence and encourage stability in the financial system through the promotion of sound banking practices.

FEDERAL FUNDS RATE: The rate of interest at which Fed funds are traded. This rate is currently pegged by the Federal Reserve through open-market operations.

FEDERAL HOME LOAN BANKS (FHLB): Government sponsored wholesale banks (currently 12 regional banks), which lend funds and provide correspondent banking services to member commercial banks, thrift institutions, credit unions and insurance companies. The mission of the FHLBs is to liquefy the housing related assets of its members who must purchase stock in their district Bank.

FEDERAL NATIONAL MORTGAGE ASSOCIATION (FNMA): FNMA, like GNMA was chartered under the Federal National Mortgage Association Act in 1938. FNMA is a federal corporation working under the auspices of the Department of Housing and Urban Development (HUD). It is the largest single provider of residential mortgage funds in the United States. Fannie Mae, as the corporation is called, is a private stockholder-owned corporation. The corporation's purchases include a variety of adjustable mortgages and second loans, in addition to fixed-rate mortgages. FNMA's securities are also highly liquid and are widely accepted. FNMA assumes and guarantees that all security holders will receive timely payment of principal and interest.

FEDERAL OPEN MARKET COMMITTEE (FOMC): Consists of seven members of the Federal Reserve Board and five of the twelve Federal Reserve Bank Presidents. The President of the New York Federal Reserve Bank is a permanent member, while the other Presidents serve on a rotating basis. The Committee periodically meets to set Federal Reserve guidelines regarding purchases and sales of Government Securities in the open market as a means of influencing the volume of bank credit and money.

FEDERAL RESERVE SYSTEM: The central bank of the United States created by Congress and consisting of a seven member Board of Governors in Washington, D.C., 12 regional banks and about 5,700 commercial banks that are members of the system.

GOVERNMENT NATIONAL MORTGAGE ASSOCIATION (GNMA or Ginnie Mae): Securities influencing the volume of bank credit guaranteed by GNMA and issued by mortgage bankers, commercial banks, savings and loan associations, and other institutions. Security holder is protected by full faith and credit of the U.S. Government. Ginnie Mae securities are backed by the FHA, VA or FHA mortgages. The term “pass-throughs” is often used to describe Ginnie Maes.

INTEREST: The amount earned while owning a debt security, generally calculated as a percentage of the principal amount.

INVERSE FLOATER: A bond or other type of debt whose coupon rate has an inverse relationship to a benchmark rate. An inverse floater adjusts its coupon payment as the interest rate changes. This investment is prohibited under in the City’s and Successor Agency to the Brea Redevelopment Agency Investment Policy.

FEDERALLY INSURED TIME DEPOSIT: A time deposit is an interest-bearing bank deposit account that has a specified date of maturity, such as a certificate of deposit (CD). These deposits are limited to funds insured in accordance with FDIC insurance deposit limits.

LEVERAGE: Borrowing funds in order to invest in securities that have the potential to pay earnings at a rate higher than the cost of borrowing.

LIQUIDITY: The speed and ease with which an asset can be converted to cash.

LOCAL AGENCY INVESTMENT FUND (LAIF): A voluntary investment fund open to government entities and certain non-profit organizations in California that is managed by the State Treasurer’s Office.

POOL: Investment pools that range from the State Treasurer’s Office Local Agency Investment Fund (LAIF) to county pools, to Joint Powers Authorities (JPAs). These funds are not subject to the same SEC rules applicable to money market mutual funds.

MAKE WHOLE CALL: A type of call provision on a bond that allows the issuer to pay off the remaining debt early. Unlike a call option, with a make whole call provision, the issuer makes a lump sum payment that equals the net present value (NPV) of future coupon payments that will not be paid because of the call. With this type of call, an investor is compensated, or "made whole."

MARGIN: The difference between the market value of a security and the loan a broker makes using that security as collateral.

MARKET RISK: The risk that the value of securities will fluctuate with changes in overall market conditions or interest rates.

MARKET VALUE: The price at which a security can be traded.

MASTER REPURCHASE AGREEMENT: A written contract covering all future transactions between the parties to repurchase—reverse repurchase agreements that establishes each party's rights in the transactions. A master agreement will often specify, among other things, the right of the buyer-lender to liquidate the underlying securities in the event of default by the seller borrower.

MATURITY: The final date upon which the principal of a security becomes due and payable.

MEDIUM TERM NOTES: Unsecured, investment-grade senior debt securities of major corporations which are sold in relatively small amounts on either a continuous or an intermittent basis. MTNs are highly flexible debt instruments that can be structured to respond to market opportunities or to investor preferences.

MODIFIED DURATION: The percent change in price for a 100-basis point change in yields. Modified duration is the best single measure of a portfolio's or security's exposure to market risk.
MARKET: The market in which short-term debt instruments (T-bills, discount notes, commercial paper, and banker's acceptances) are issued and traded.

MONEY MARKET MUTUAL FUND: A mutual fund that invests exclusively in short-term securities. Examples of investments in money market funds are certificates of deposit and U.S. Treasury securities. Money market funds attempt to keep their net asset values at $1 per share.

MORTGAGE PASS-THROUGH SECURITIES: A securitized participation in the interest and principal cash flows from a specified pool of mortgages. Principal and interest payments made on the mortgages are passed through to the holder of the security.

MUNICIPAL SECURITIES: Securities issued by state and local agencies to finance capital and operating expenses.

MUTUAL FUND: An entity which pools the funds of investors and invests those funds in a set of securities which is specifically defined in the fund's prospectus. Mutual funds can be invested in various types of domestic and/or international stocks, bonds, and money market instruments, as set forth in the individual fund's prospectus. For most large, institutional investors, the costs associated with investing in mutual funds are higher than the investor can obtain through an individually managed portfolio.

NATIONALLY RECOGNIZED STATISTICAL RATING ORGANIZATION (NRSRO): A credit rating agency that the Securities and Exchange Commission in the United States uses for regulatory purposes. Credit rating agencies provide assessments of an investment's risk. The issuers of investments, especially debt securities, pay credit rating

agencies to provide them with ratings. The three most prominent NRSROs are Fitch, S&P, and Moody's.

NEGOTIABLE CERTIFICATE OF DEPOSIT (CD):). A short-term debt instrument that pays interest and is issued by a bank, savings or federal association, state or federal credit union, or state-licensed branch of a foreign bank. Negotiable CDs are traded in a secondary market and are payable upon order to the bearer or initial depositor (investor).

OFFER: The price asked by a seller of securities. (When you are buying securities, you ask for an offer.) See Asked and Bid.

OPEN MARKET OPERATIONS: Purchases and sales of government and certain other securities in the open market by the New York Federal Reserve Bank as directed by the FOMC in order to influence the volume of money and credit in the economy. Purchases inject reserves into the bank system and stimulate growth of money and credit; sales have the opposite effect. Open market operations are the Federal Reserve's most important and most flexible monetary policy tool.

PASSBOOK SAVINGS ACCOUNT: A savings account in which deposits and withdrawals are recorded in the depositor's passbook.

PASS-THOUGH SECURITY: A pool of fixed income securities backed by a package of assets (i.e. mortgages) where the holder receives the principal and interest payments.

PORTFOLIO: Collection of securities held by an investor.

PRIMARY DEALER: A financial institution (1) that is a trading counterparty with the Federal Reserve in its execution of market operations to carry out U.S. monetary policy, and (2) that participates for statistical reporting purposes in compiling data on activity in the U.S. Government securities market.

PRINCIPAL: The face value or par value of an investment.

PRUDENT INVESTOR STANDARD: Is a standard defined under State Government Code Section 53600.3 that states when investing, reinvesting, purchasing, acquiring, exchanging, selling, or managing public funds, a trustee shall act with care, skill, prudence, and diligence under the circumstances then prevailing, including, but not limited to, the general economic conditions and the anticipated needs of the City, that a prudent person acting in a like capacity and familiarity with those matters would use in the conduct of funds of a like character and with like aims, to safeguard the principal and maintain the liquidity needs of the City/Successor Agency to the Brea Redevelopment Agency. Within the limitations of this section and considering individual investments as part of an overall strategy, investments may be acquired as authorized by law.

PRUDENT PERSON (PRUDENT INVESTOR) RULE: A standard of responsibility which applies to fiduciaries. In California, the rule is stated as "Investments shall be managed with the care, skill, prudence and diligence, under the circumstances then prevailing, that a prudent person, acting in a like capacity and familiar with such matters, would use in the conduct of an enterprise of like character and with like aims to accomplish similar purposes."

QUALIFIED PUBLIC DEPOSITORIES: A financial institution which does not claim exemption from the payment of any sales or compensating use or ad valorem taxes under the laws of this state, which has segregated for the benefit of the commission eligible collateral having a value of not less than its maximum liability and which has been approved by the Public Deposit Protection Commission to hold public deposits.

RATE OF RETURN: The yield obtainable on a security based on its purchase price or its current market price. This may be the amortized yield to maturity on a bond the current income return.

REPURCHASE AGREEMENT: Short-term purchases of securities with a simultaneous agreement to sell the securities back at a higher price. From the seller's point of view, the same transaction is a reverse repurchase agreement.

REVERSE REPURCHASE AGREEMENT (REVERSE REPO): A reverse-repurchase agreement (reverse repo) involves an investor borrowing cash from a financial institution in exchange for securities. The investor agrees to repurchase the securities at a specified date for the same cash value plus an agreed upon interest rate. Although the transaction is similar to a repo, the purpose of entering into a reverse repo is quite different. While a repo is a straightforward investment of public funds, the reverse repo is a borrowing.

SAFEKEEPING: A service to bank customers whereby securities are held by the bank in the customer's name.

SECONDARY MARKET: A market made for the purchase and sale of outstanding issues following the initial distribution.

SECURITIES AND SECURITIES AND EXCHANGE COMMISSION (SEC): The U.S. Securities and Exchange Commission (SEC) is an independent federal government agency responsible for protecting investors, maintaining fair and orderly functioning of securities markets and facilitating capital formation. It was created by Congress in 1934 as the first federal regulator of securities markets. The SEC promotes full public disclosure, protects investors against fraudulent and manipulative practices in the market, and monitors corporate takeover actions in the United States.

SECURITIES AND EXCHANGE COMMISSION (SEC) RULE 15C315c3-1: An SEC rule setting capital requirements for brokers and dealers. Under Rule 15c3-1, a broker or dealer must have sufficient liquidity in order to cover the most pressing obligations. This is defined as having a certain amount of liquidity as a percentage of the broker/dealer's total obligations. If the percentage falls below a certain point, the broker or dealer may not be allowed to take on new clients and may have restrictions placed on dealings with current client.

STRUCTURED NOTE: A complex, fixed income instrument, which pays interest, based on a formula tied to other interest rates, commodities or indices. Examples include inverse floating rate notes which have coupons that increase when other interest rates are falling, and which fall when other interest rates are rising, and "dual index floaters," which pay interest based on the relationship between two other interest rates - for example, the yield on the ten-year Treasury note minus the Libor rate. Issuers of such notes lock in a reduced cost of borrowing by purchasing interest rate swap agreements.

SUPRANATURAL: A Supranational is a multi-national organization whereby member states transcend national boundaries or interests to share in the decision making to promote economic development in the member countries.

TOTAL RATE OF RETURN: A measure of a portfolio's performance over time. It is the internal rate of return, which equates the beginning value of the portfolio with the ending value; it includes interest earnings, realized and unrealized gains, and losses in the portfolio.

U.S. TREASURY OBLIGATIONS: Securities issued by the U.S. Treasury and backed by the full faith and credit of the United States. Treasuries are considered to have no credit risk and are the benchmark for interest rates on all other securities in the US and overseas. The Treasury issues both discounted securities and fixed coupon notes and bonds.

All securities issued with initial maturities of one year or less are issued as discounted instruments and are called Treasury bills. The Treasury currently issues three- and six-month T-bills at regular weekly auctions. It also issues "cash management" bills as needed to smooth out cash flows.

All securities issued with initial maturities of two to ten years are called Treasury notes and pay interest semi-annually.

TREASURY BONDS: All securities issued with initial maturities greater than ten years are called Treasury bonds. Like Treasury notes, they pay interest semi-annually.

UNIFORM NET CAPITAL RULE: Securities and Exchange Commission requirement that member firms as well as nonmember broker-dealers in securities maintain a maximum ratio of indebtedness to liquid capital of 15 to 1; also called net capital rule and net capital ratio. Indebtedness covers all money owed to a firm, including margin loans and commitments to purchase securities, one reason new public issues are spread among members of underwriting syndicates. Liquid capital includes cash and assets easily converted into cash.

YIELD TO MATURITY: The annualized internal rate of return on an investment which equates the expected cash flows from the investment to its cost.

City Of Brea / Successor Agency to the Brea Redevelopment Agency

FINAL

STATEMENT OF INVESTMENT POLICY

August 17, 2021

Deleted: DRAFT

Deleted: 8

Deleted: 0

Purpose: This statement is intended to provide a guideline for the prudent investment of funds and to outline the policies for maximizing the efficiency of the City of Brea and Successor Agency to the Brea Redevelopment Agency ("City") cash management system. The ultimate goal is to enhance the economic status of the City while protecting its pooled funds. This investment policy has been prepared so as to be in conformance with all pertinent existing laws of the State of California for General Law cities.

Objective: The cash management system of the City is designed to accurately monitor and forecast expenditures and revenues, thus enabling the City to invest funds to the fullest extent possible. The City attempts to obtain a market rate of return without incurring undue risk to principal. The objectives of such investments are: 1) preserve capital, 2) maintain financial flexibility/liquidity, and 3) obtain a competitive rate of return on the City's investments.

Scope: This investment policy applies to the decisions and activities of the City with regard to investing the financial assets of all funds, including the following: General Fund, Special Revenue Funds, Assessment Funds, Enterprise Funds, Internal Service Funds, Capital Projects Funds, Debt Service Funds, Reserve Funds, Trust and Agency Funds, and any other funds that may be created from time to time. This policy does not apply retiree health care savings/trust/plan(s) or deferred compensation plans.

Investment Responsibility: Investment decisions of the City funds are the responsibility of the City Treasurer and/or Administrative Services Director, and shall comply with the Investment Policy of the City. These responsibilities include the authority to open accounts with banks, brokers and dealers, establish safekeeping accounts or other arrangements for the custody of securities and to execute such documents as may be necessary.

Those authorized to execute transactions for the City include the: 1) City Treasurer, 2) Administrative Services Director, 3) Financial Services Manager, and 4) those specifically deputized by the City Treasurer and Administrative Services Director with said authorization to be filed with the City Clerk. The City Treasurer and Administrative Services Director shall insure that an authorized person is available at all times to execute the City's investments. Investment managers, brokers and dealers are to be provided with a list of specified names of those persons authorized to execute transactions. The City Council may authorize the delegation of investments to an outside investment manager.

Deleted: Revenue and Budget

Reporting: The Administrative Services Director shall be responsible for reporting the status of investments to the City Council and City Manager on a monthly basis. These reports will disclose, at a minimum, the following information about the characteristics of the City's portfolio:

A. An asset listing showing par value, cost and accurate and complete market value of each security, type of investment, issuer, and interest rate.

B. Monthly transactions for the period.
C. A one-page summary report that shows:
    1. Average maturity of the portfolio and modified duration of the portfolio;
    2. Maturity distribution of the portfolio;
    3. Average portfolio credit quality; and,
    4. Time-weighted total rate of return for the portfolio for the prior one month, three months, twelve months, year to date, and since inception compared to the City's market benchmark returns for the same periods;
D. A statement of compliance with investment policy, including a schedule of any transactions or holdings which do not comply with this policy or with the California Government Code, including a justification for their presence in the portfolio and a timetable for resolution.
E. A statement that the City has adequate funds to meet its cash flow requirements for the next six months.

Reports are to be submitted to the City Council and City Manager by the 3rd City Council meeting following the end of the reporting month.

The Investment Advisory Committee will review the status of investments on a quarterly basis. These reports shall include the type of investment, institution, face amount, market value, book value, interest rate, date of maturity, compliance to the investment policy.

If the City has an outside Investment Manager, the Investment Manager shall periodically report on the activity and results of the funds being managed by the Investment Manager. Additionally, the Investment Manager shall notify the Investment Advisory Committee when investment portfolios demonstrate low performance, if any, which occurs between each periodic report.

Prudence: The standard of prudence to be applied by the City Treasurer, Administrative Services Director, Financial Services Manager, and those specifically deputized by the City Treasurer and Administrative Services Director with said authorization to be filed with the City Clerk shall be the "prudent investor" standard, as defined under Government Code Section 53600.3 which states, "When investing, reinvesting, purchasing, acquiring, exchanging, selling, or managing public funds, a trustee shall act with care, skill, prudence, and diligence under the circumstances then prevailing, including, but not limited to, the general economic conditions and the anticipated needs of the City, that a prudent person acting in a like capacity and familiarity with those matters would use in the conduct of funds of a like character and with like aims, to safeguard the principal and maintain the liquidity needs of the City/Successor Agency to the Brea Redevelopment Agency. Within the limitations of this section and considering individual investments as part of an overall strategy, investments may be acquired as authorized by law."

Deleted: Revenue and Budget

Ethics and Conflicts of Interest: Officers and employees involved in the City investment process shall refrain from personal business activity that could conflict with proper execution of the investment program or which could impair their ability to make impartial investment decisions. City employees and investment officials shall disclose any material financial interests in financial institutions that conduct business within the City, and they shall further disclose any personal financial/investment positions that could be related to the performance of the City's portfolio. City employees and officers shall refrain

from undertaking personal investment transactions with the same individual with whom business is conducted on behalf of the City.

Investment Instruments: Funds of the City may be invested in any instrument allowable under current legislation of the State of California (Government Code Section 53600 et sec.) so long as the investment is appropriate and consistent with this Investment Policy taking into consideration the City's investment objectives. Investment instruments may include:

- U.S. Treasury Obligations (Bills, Notes and Bonds)
- U.S. Government Agency Securities and Instrumentality's of Government Sponsored Corporations, including a maximum of 5% in callable bonds issued by such agencies
- Banker's Acceptances
- Commercial Paper
- Repurchase Agreements (requires a master repurchase agreement to be signed and on file with the bank or broker/dealer)
- Certificates of Deposit
- Negotiable Certificates of Deposit
- Passbook Savings Accounts
- Interest Bearing Checking Accounts
- Medium Term Corporate Notes
- Bank Money Market Accounts
- Local Agency Investment Fund (State Pool)
- County of Orange Investment Fund (County Pool)
- Other investments that are, or may become, legal investments through the State of California Government Code.

Provisions of Government Code Section 53601 shall be adhered to at all times. This includes, but is not limited to, the following restrictions:

- Bankers Acceptances cannot exceed 40% of the portfolio nor exceed 180 days;
- Commercial Paper cannot exceed 25% of the portfolio. Commercial Paper must be rated P-1 (Moody's), A-1 (Standard & Poor's) and cannot exceed 270 days;
- Money Market Funds cannot exceed 20% of the portfolio;
- Medium Term Corporate Notes cannot exceed 30% of the portfolio and must carry a minimum A rating;
- Pass-through securities including Collateralized Mortgage Obligations cannot exceed 20% of the portfolio.
    - Asset Backed Securities are limited to a maximum of 10% of the portfolio at time of purchase
        - Maximum maturity of 5 years
        - Asset Backed Security must be rated AA or higher
- Supranational Securities must be rated AA or higher, cannot exceed 15% of the portfolio and no more than 5% of portfolio per issuer. The maximum maturity cannot exceed 5 years.
- Additionally, the City will use the guidelines established by the joint committee of the California Municipal Treasurers Association and the California Society of Municipal Finance Officers as the basis for investing in government investment pools.

Commented [CM1]: Recommend updating maximum portfolio percentage to 40% to be in line with SB 998

Commented [MF2]: At the Investment Advisory Committee on June 26, 2021, the Committee recommended keeping the Commercial Paper Allocation at 25% of the portfolio

Deleted: Under a provision sunsetting on January 1, 2026, no more than 40% of the portfolio may be invested in Commercial Paper if the Agency's investment assets under management are greater than $100,000,000

For purposes of complying with legal investment limitations, the percentage references pertaining to the above refers to the maturity value of the portfolio at the time of purchase.

If a security owned by the City is downgraded to a level below the requirements of this policy, making the security ineligible for additional purchases, the following steps will be taken:

- Any actions taken related to the downgrade by the investment manager will be communicated to the City Council, the Investment Advisory Committee, City Treasurer and the Administrative Services Director within two (2) business days.

- If a decision is made to retain the security, the credit situation will be monitored and reported to the City Council.

Prohibited Investments: The City shall not invest any funds in derivatives, inverse floaters, range notes, or interest- only strips that are derived from a pool of mortgages. The City shall not invest any funds in any security that could result in a zero interest accrual if held to maturity.

However, the City is authorized to invest in securities that could result in zero or negative interest accrual if held to maturity if they are issued by or backed by the United States Government. Negative interest rate securities in United States Government securities will only be permitted in the portfolio in the event the United States Federal Reserve adopts a negative interest rate monetary policy framework. Notification to the City Council, the Investment Advisory Committee, the City Treasurer, and the Administrative Services Director will be given within two (2) business days when securities of this type are being added to the portfolio, this allows for full disclosure and understanding of the strategy given the market conditions.

Deleted: T

Deleted:

Deleted: that could result in zero or negative interest accrual if held to maturity

Commented [CM3]: Recommend adding language on zero or negative interest securities backed by US Government to be in line with the passing of SB 998

Collateralization: Collateralization shall be required on two types of investments: Certificates of deposit and repurchase (and reverse repurchase) agreements. A collateral agreement must be current and on file before any funds can be transferred for collateralized certificates of deposit.

Collateral shall be held by an independent third party with whom the City has a current written custodial agreement. A clearly marked evidence of ownership (safekeeping receipt) must be supplied to the City and retained. The right of collateral substitution is granted in accordance with the following requirements:

A. Certificates of Deposit
   1. Government securities used as collateral require one hundred and ten (110) percent of market value to the face amount of the deposit
   2. Promissory notes secured by first trust deeds used as collateral require one hundred and fifty (150) percent of market value to the face amount of the deposit
   3. Irrevocable letters of Credit issued by the Federal Home Loan Bank of San Francisco require one hundred and five (105) percent of market value to the face amount of the deposit

B. Repurchase and Reverse Repurchase Agreements

1. Only U.S. Treasury securities or federal agency securities are acceptable collateral. All securities underlying repurchase agreements must be delivered to the City's custodian bank versus payment or be handled under a properly executed tri-party repurchase agreement. The total market value of all collateral for each repurchase agreement must equal or exceed one hundred and two (102) percent of the total dollar value of the money invested by the City for the term of the investment. For any repurchase agreement with a term of more than one (1) day, the value of the underlying securities must be reviewed on an ongoing basis according to market conditions. Market value must be calculated each time there is a substitution of collateral.
2. The City or its trustee shall have perfected first security interest under the Uniform Commercial Code in all securities subject to a repurchase agreement.

Investment Criteria: Criteria for selecting investments and the order of priority are:

A. Safety

The safety and risk associated with an investment refers to the potential loss of principal, interest or a combination of these amounts. The City only operates in those investments that are considered very safe.

B. Liquidity

This refers to the ability to convert an investment into cash at any moment in time with a minimal chance of losing some portion of principal or interest. Liquidity is an important investment quality when there is an occasional need for funds. The potential fluctuations in market value and the expected future availability of reasonable bids in the market are to be important considerations when selecting an investment.

C. Yield

Yield is the potential dollar earnings an investment can provide and sometimes is described as the rate of return.

Diversification: The City will diversify the use of investment instruments to avoid incurring unreasonable risks inherent in over-investing in specific instruments, or individual financial institutions. In no case, without prior notification and approval from the City Council, shall the amount invested in one entity at the time of purchase exceed 5% of the total portfolio, with the following exceptions:

- U.S. Federal Government Agency Obligations of one specific entity cannot exceed 25% of the maturity value of the portfolio at the time of purchase.
- U.S. Treasury Obligations (Treasury Bills, Treasury Strips, Bonds, Notes) directly backed by the full faith and credit of the United States for payment of principal and interest shall not be subject to a maximum percentage of the portfolio.
- Approved State and County investment pools together cannot exceed 60% of the maturity value of the portfolio at the time of purchase, and no more than 40% of the maturity value at the time of purchase can be deposited in any one particular pool.

Investment Pools: The City Treasurer, Administrative Services Director and City Council

have determined that use of investment pools is a practical investment option. The City will utilize guidelines established by the California Municipal Treasurers Association and California Society of Municipal Finance Officers to ensure the safety of investment pools which includes a thorough investigation of the pool/fund prior to investing, and on a continual basis. There shall be a questionnaire developed which will answer the following general questions:

- A description of eligible investment securities, and a written statement of investment policy and objectives.
- A description of interest calculations and how it is distributed, and how gains and losses are treated.
- A description of how the securities are safeguarded (including the settlement processes), and how often the securities are priced and the program audited.
- A description of who may invest in the program, how often, what size deposit and withdrawal are allowed.
- A schedule for receiving statements and portfolio listings.
- Are reserves, retained earnings, etc. utilized by the pool/fund?
- A fee schedule, and when and how is it assessed.
- Is the pool/fund eligible for bond proceeds and/or will it accept such proceeds?

Maturity Limitations: Every investment instrument purchased must have a term remaining to maturity of less than five years, unless the investment is for the Senior Low Cost Housing Subsidy Program, bond proceeds for the Reserve Fund, funded/capitalized interest fund; or the City Council has granted express authority to make that investment, either specifically or as part of an investment program approved by the City Council no more than three months prior to the investment. When possible, a minimum of 25% of the portfolio should be in maturities of one year or less.

Safekeeping and Custody: All security transactions, including collateral for repurchase agreements, entered into by the City shall be conducted on a delivery-versus-payment (DVP) basis which ensure that securities are deposited in an eligible financial institution prior to the release of funds. Securities shall be held by a third-party custodian designated by the City and evidenced by safekeeping receipts with a written custodial agreement. The only exception to the foregoing shall be depository accounts and securities purchases made with: LAIF, direct time certificates of deposit and money market mutual funds, since the purchased securities are not deliverable. Settlement instructions sent to the safekeeping agent shall require authorization.

Monthly trust statements are reconciled to the Investment Reports by the City's Accountant. The City's Accountant performs reconciliation of the monthly bank statements. The periodic review of the investment portfolio, including investment types, purchase price, market values, maturity dates, and investment yields as well as conformance to the stated investment policy will be performed by the Investment Advisory Committee.

Qualified Broker/Dealers: For those investments managed directly by the City, the City shall maintain a listing of broker/dealers that are approved by the Investment Advisory Committee for investment purposes. All broker/dealers who desire to bid for investment transactions must supply the City with the following information; a completed broker/dealer

questionnaire, audited financial statements, proof of National Association of Security Dealers' certification, trading resolution, proof of California registration, and certification of having read the City of Brea's investment policy.

The Investment Advisory Committee will conduct an annual review of the qualified broker/dealers. The decision to add or subtract from the authorized list of broker/dealers will be based on many factors to include, but not limited to, products offered, service levels, references, etc. No single factor will determine the Committee's final decision. A current audited financial statement is required to be on file for each broker/dealer with which the City of Brea invests. The City's authorized brokers/dealers shall provide written confirmation of having read and understood the City's investment policy and that all investments recommended by them will be suitable for the City of Brea.

Selection of broker/dealers used by an external investment adviser retained by the City will be at the sole discretion of the adviser. Where possible, transactions with broker/dealers shall be selected on a competitive basis and their bid or offering prices shall be recorded. If there is no other readily available competitive offering, best efforts will be made to document quotations for comparable or alternative securities. When purchasing original issue instrumentality securities, no competitive offerings will be required as all dealers in the selling group offer those securities at the same original issue price.

Monitoring and Adjusting the Portfolio: The City Treasurer and Administrative Services Director will routinely monitor the contents, performance and risk profile of the investment portfolio, the investment alternatives, and the relative values of competing investment instruments and will adjust the portfolio accordingly based on the approved Statement of Investment Policy on a quarterly basis. The City Council shall also bear a responsibility for monitoring the implementation of this policy and the safeguarding of the City's Treasury.

Performance Standards: The investment portfolio shall be designed to attain a market-average rate of return throughout budgetary and economic cycles, taking into account the City's risk constraints, the cash flow characteristics of the portfolio, and state and local laws, ordinances or resolutions that restrict investments.

The Administrative Services Director shall monitor and evaluate the portfolio's performance relative to market benchmark, which will be included in the monthly report of investments. The Treasurer and Administrative Services Director shall select an appropriate, readily available index to use as a market benchmark.

Bond Funds/Arbitrage: The U.S. Tax Reform Act of 1986 requires the City to perform annual arbitrage calculations and rebate excess earnings from investments of proceeds of bond issues sold after the effective date of this law to the U.S. Treasury. This arbitrage calculation may be contracted with an outside source to provide the necessary technical assistance to comply with this regulation. Funds subject to the 1986 Tax Reform Act will be kept segregated from other funds and records will be kept in a fashion to facilitate the calculations. The City's investment position relative to the new arbitrage restrictions is to continue pursuing the maximum yield on applicable investments while ensuring the safety of capital and liquidity. It is a fiscally sound position to continue maximization of yield and to rebate excess earnings, if necessary.

Review/or Modification: The Investment Advisory Committee shall be responsible for reviewing and recommending modifications to the Statement of Investment Policy and submitting it to the City Council for approval on an annual basis. However, the City Treasurer and Administrative Services Director may, at any time, further restrict the investments approved for purchase as deemed appropriate.

Internal Controls: The City Treasurer and Administrative Services Director shall organize the investment function so that specific responsibility for the performance of duties is assigned with a clear line of authority and reporting. The functions of authorizing, executing and recording transactions, custody of investments and performing reconciliation's will be handled by separate persons to reduce the risk that anyone person is in a position to conceal errors or fraud in the normal course of duty. While no internal control system, however elaborate, can guarantee absolute assurance that the City's assets are safeguarded, it is the intent of the City's internal control system to provide reasonable assurance that management of the investment function meets the City's objectives. These internal controls shall be reviewed annually by the independent auditor who shall review and comment upon the content of this policy, the effectiveness of its implementation and applicable management controls with regard to its implementation and the safeguarding of the City's Treasury funds.

Investment Advisory Committee: An Investment Advisory Committee ("Committee") is established to review and make recommendations on the Investment Policy and investment strategy of the City of Brea/Successor Agency to the Brea Redevelopment Agency and to strengthen the internal control of the management of the City's funds. The following are the duties and responsibilities of the Committee:

A. Purpose
   1. To review and make recommendations on investment policy and investment strategy of the City of Brea/Successor Agency to the Brea Redevelopment Agency.
   2. To review the City's investments on a periodic basis and to recommend any exceptions and/or changes to the policy, to the City Council for review and approval.

B. Composition of Committee
   1. City Treasurer
   2. City Council Member, who serves as the Chair (selected by the City Council)
   3. Administrative Services Director
   4. Financial Services Manager
   5. Three (3) Brea Citizens (selected by the City Council with the City Treasurer as subcommittee members)

Deleted: Revenue and Budget Manager

C. Functions
   1. Annually (or as needed)
      a. To review and approve Statement of Investment Policy
      b. To review the financial condition and registrations of qualified broker/dealers (Only required when investments are managed by the City)

   2. Monthly or Quarterly
      a. To review the City's investments

b. To recommend any modifications to the Investment Policy
c. To develop and carry out the ongoing investment strategy in accordance with the Investment Policy
d. To provide a status report at a study session of the City Council as requested

The function of the Committee is not to inhibit the daily operation of the Administrative Services Department, but to provide policy guidelines within which to work on a day-to-day basis. By this, it is meant that each individual trade need not be approved by the Committee at the time it is transacted provided that it falls within the scope of the Statement of Investment Policy.

Disclosure: Members of the Committee shall be required to comply with the Fair Political Practices Act reporting requirements (Form 700) on an annual basis and submit filings to the City Clerk's Office.

SEGREGATION OF RESPONSIBILITIES
(External)

FUNCTION	RESPONSIBILITY
Develop formal Statement of Investment Policy	Administrative Services Director Financial Services Manager
Recommend modifications to Investment Policy	City Treasurer Administrative Services Director Financial Services Manager
Review formal Statement of Investment Policy and recommend a Council action	City Treasurer Investment Advisory Committee
Adopt formal Statement of Investment Policy	City Council
Select investments	Outside Investment Manager
Execute investment transactions and fax or email completed trade information to City	Outside Investment Manager
Review transactions for compliance with investment policy	City Treasurer Administrative Services Director or Financial Services Manager
Investment verification (match broker confirmation to trade information provided by outside Investment Manager to City investment records)	Administrative Services Director or Financial Services Manager
Record investment transactions into City's accounting records	City Accountant
Reconcile investment records to accounting records and bank statements and report any variances to Administrative Services Director and City Treasurer	City Accountant
Security	All investment securities will be held in safekeeping in the trust department of the City's Depository Bank, or other third party custodian as designated by the City Treasurer or Administrative Services Director.

Deleted: ¶
Revenue and Budget Manager

Deleted: Revenue and Budget Manager

Deleted: ¶

Deleted: Revenue and Budget Manager

Deleted: Revenue and Budget Manager

SEGREGATION OF RESPONSIBILITIES
(Internal)

FUNCTION	RESPONSIBILITY
Develop formal Statement of Investment Policy	City Treasurer Administrative Services Director Financial Services Manager
Recommend modifications to Statement of Investment Policy	City Treasurer Administrative Services Director Financial Services Manager Investment Advisory Committee
Review formal Statement of Investment Policy and recommend City Council action	Investment Advisory Committee
Annually review and adopt a formal Statement of Investment Policy	City Council
Select investments	Administrative Services Director or Financial Services Manager
Approve transactions	Administrative Services Director
Execute investment transactions	Administrative Services Director
Investment verification (match broker confirmation to City investment records)	Administrative Services Director or Financial Services Manager
Record investment transactions into City's accounting records	City Accountant
Reconcile investment records to accounting records and bank statements and report any variances to the Administrative Services Director	City Accountant
Security	All investment securities will be held in safekeeping in the trust department of the City's Depository Bank, or other third party custodian as designated by the City Treasurer or Administrative Services Director

Deleted: Revenue and Budget Manager

Deleted: Revenue and Budget Manager

Deleted:

Deleted: Revenue and Budget Manager

Deleted: Revenue and Budget Manager

GLOSSARY OF INVESTMENTS TERMS

AGENCIES: Shorthand market terminology for any obligation issued by *a government-sponsored entity (GSE),* or a *federally related institution*. Most obligations of GSEs are not guaranteed by the full faith and credit of the US government. Examples are:

FFCB: The Federal Farm Credit Bank System provides credit and liquidity in the agricultural industry. FFCB issues discount notes and bonds.

FHLB: The Federal Home Loan Bank provides credit and liquidity in the housing market. FHLB issues discount notes and bonds.

FHLMC: Like FHLB, the Federal Home Loan Mortgage Corporation provides credit and liquidity in the housing market. FHLMC, also called "Freddie MacFreddieMac" issues discount notes, bonds and mortgage pass-through securities.

FNMA: Like FHLB and Freddie MacFreddieMac, the Federal National Mortgage Association was established to provide credit and liquidity in the housing market. FNMA, also known as "Fannie MaeFannieMae," issues discount notes, bonds and mortgage pass-through securities.

GNMA: The Government National Mortgage Association, known as "Ginnie MaeGinnieMae," issues mortgage pass-through securities, which are guaranteed by the full faith and credit of the US Government.

PEFCO: The Private Export Funding Corporation assists exporters. Obligations of PEFCO are not guaranteed by the full faith and credit of the US government.

TVA: The Tennessee Valley Authority provides flood control and power and promotes development in portions of the Tennessee, Ohio, and Mississippi River valleys. TVA currently issues discount notes and bonds.

ASSET BACKED SECURITIES: Securities supported by pools of installment loans or leases or by pools of revolving lines of credit.

AVERAGE LIFE: In mortgage-related investments, including CMOs, the average time to expected receipt of principal payments, weighted by the amount of principal expected.

BANKER'S ACCEPTANCE: A money market instrument created to facilitate international trade transactions. It is highly liquid and safe because the risk of the trade transaction is transferred to the bank which "accepts" the obligation to pay the investor.

BENCHMARK: A comparison security or portfolio. A performance benchmark is a partial market index, which reflects the mix of securities allowed under a specific investment policy.

BROKER: A broker brings buyers and sellers together for a transaction for which the broker receives a commission. A broker does not sell securities from his own position.

CALIFORNIA MUNICIPAL TREASURERS ASSOCIATION (CMTA): Is the professional society of active public treasurers of California counties, cities and special districts. It sets ethical standards for the treasury profession in state and local governments in California.

CALIFORNIA SOCIETY OF MUNICIPAL FINANCE OFFICERS (CSMFO): Is a professional association of state, county and local government finance officers in

California. CSMFO is the statewide organization serving all of California municipal finance professionals, an affiliate of the nationwide Government Finance Officers Association (GFOA).

CALLABLE: A callable security gives the issuer the option to call it from the investor prior to its maturity. The main cause of a call is a decline in interest rates. If interest rates decline, the issuer will likely call its current securities and reissue them at a lower rate of interest.

CERTIFICATE OF DEPOSIT (CD): A time deposit with a specific maturity evidenced by a certificate.

CERTIFICATE OF DEPOSIT ACCOUNT REGISTRY SYSTEM (CDARS): A private placement service that allows local agencies to purchase more than $250,000 in CDs from a single financial institution (must be a participating institution of CDARS) while still maintaining FDIC insurance coverage. CDARS is currently the only entity providing this service. CDARS facilitates the trading of deposits between the California institution and other participating institutions in amounts that are less than $250,000 each, so that FDIC coverage is maintained.

COLLATERAL: **COLLATERAL.** Securities or cash pledged by a borrower to secure repayment of a loan or repurchase agreement. Also, securities pledged by a financial institution to secure deposits of public monies.

COLLATERALIZED BANK DEPOSIT: A bank deposit that is collateralized at least 100% (principal plus interest to maturity). The deposit is collateralized using assets set aside by the issuer such as Treasury securities or other qualified collateral to secure the deposit in excess of the limit covered by the Federal Deposit Insurance Corporation.

COLLATERALIZED MORTGAGE OBLIGATION (CMO): Classes of bonds that redistribute the cash flows of mortgage securities (and whole loans) to create securities that have different levels of prepayment risk, as compared to the underlying mortgage securities.

COLLATERIALIZED TIME DEPOSIT: Time deposits that are collateralized at least 100% (principal plus interest to maturity). These instruments are collateralized using assets set aside by the issuer such as Treasury securities or other qualified collateral to secure the deposit in excess of the limit covered by the Federal Deposit Insurance Corporation.
PAPER: The short-term unsecured debt of corporations.

COUPON: The rate of return at which interest is paid on a bond.

CREDIT RISK: The risk that principal and/or interest on an investment will not be paid in a timely manner due to changes in the condition of the issuer.
A dealer acts as a principal in security transactions, selling securities from and buying securities for his own position.

DEBENTURE: A bond secured only by the general credit of the issuer.
VS. PAYMENT (DVP): A securities industry procedure whereby payment for a security must be made at the time the security is delivered to the purchaser's agent.

DERIVATIVE: Any security that has principal and/or interest payments which are subject

to uncertainty (but not for reasons of default or credit risk) as to timing and/or amount, or any security which represents a component of another security which has been separated from other components ("Stripped" coupons and principal). A derivative is also defined as a financial instrument the value of which is totally or partially derived from the value of another instrument, interest rate, or index.

The difference between the par value of a bond and the cost of the bond, when the cost is below par. Some short-term securities, such as T-bills and banker's acceptances, are known as discount securities. They sell at a discount from par and return the par value to the investor at maturity without additional interest. Other securities, which have fixed coupons, trade at a discount when the coupon rate is lower than the current market rate for securities of that maturity and/or quality.

DISCOUNT SECURITIES: Non-interest bearing money market instruments that are issued a discount and redeemed at maturity for full face value *(e.g., U.S. Treasury Bills.)*

DIVERSIFICATION: Dividing investment funds among a variety of investments to avoid excessive exposure to any one source of risk.

DURATION: The weighted average time to maturity of a bond where the weights are the present values of the future cash flows. Duration measures the price sensitivity of a security to changes interest rates.

FEDERAL CREDIT AGENCIES: Agencies of the Federal government set up to supply credit to various classes of institutions and individuals, *e.g.*, S&L's, small business firms, students, farmers, farm cooperatives, and exporters.

FEDERAL DEPOSIT INSTURANCE CORPORATION (FDIC): The Federal Deposit Insurance Corporation (FDIC) is an independent federal agency insuring deposits in U.S. banks and thrifts in the event of bank failures. The FDIC was created in 1933 to maintain public confidence and encourage stability in the financial system through the promotion of sound banking practices.

FEDERAL FUNDS RATE: The rate of interest at which Fed funds are traded. This rate is currently pegged by the Federal Reserve through open-market operations.

FEDERAL HOME LOAN BANKS (FHLB): Government sponsored wholesale banks (currently 12 regional banks), which lend funds and provide correspondent banking services to member commercial banks, thrift institutions, credit unions and insurance companies. The mission of the FHLBs is to liquefy the housing related assets of its members who must purchase stock in their district Bank.

FEDERAL NATIONAL MORTGAGE ASSOCIATION (FNMA): FNMA, like GNMA was chartered under the Federal National Mortgage Association Act in 1938. FNMA is a federal corporation working under the auspices of the Department of Housing and Urban Development (HUD). It is the largest single provider of residential mortgage funds in the United States. Fannie Mae, as the corporation is called, is a private stockholder-owned corporation. The corporation's purchases include a variety of adjustable mortgages and second loans, in addition to fixed-rate mortgages. FNMA's securities are also highly liquid and are widely accepted. FNMA assumes and guarantees that all security holders will receive timely payment of principal and interest.

FEDERAL OPEN MARKET COMMITTEE (FOMC): Consists of seven members of the Federal Reserve Board and five of the twelve Federal Reserve Bank Presidents. The President of the New York Federal Reserve Bank is a permanent member, while the other Presidents serve on a rotating basis. The Committee periodically meets to set Federal Reserve guidelines regarding purchases and sales of Government Securities in the open market as a means of influencing the volume of bank credit and money.

FEDERAL RESERVE SYSTEM: The central bank of the United States created by Congress and consisting of a seven member Board of Governors in Washington, D.C., 12 regional banks and about 5,700 commercial banks that are members of the system.

GOVERNMENT NATIONAL MORTGAGE ASSOCIATION (GNMA or Ginnie Mae): Securities influencing the volume of bank credit guaranteed by GNMA and issued by mortgage bankers, commercial banks, savings and loan associations, and other institutions. Security holder is protected by full faith and credit of the U.S. Government. Ginnie Mae securities are backed by the FHA, VA or FHA mortgages. The term "pass-throughs" is often used to describe Ginnie Maes.

INTEREST: The amount earned while owning a debt security, generally calculated as a percentage of the principal amount.

INVERSE FLOATER: A bond or other type of debt whose coupon rate has an inverse relationship to a benchmark rate. An inverse floater adjusts its coupon payment as the interest rate changes. This investment is prohibited under in the City's and Successor Agency to the Brea Redevelopment Agency Investment Policy.

FEDERALLY INSURED TIME DEPOSIT: A time deposit is an interest-bearing bank deposit account that has a specified date of maturity, such as a certificate of deposit (CD). These deposits are limited to funds insured in accordance with FDIC insurance deposit limits.

LEVERAGE: Borrowing funds in order to invest in securities that have the potential to pay earnings at a rate higher than the cost of borrowing.

LIQUIDITY: The speed and ease with which an asset can be converted to cash.

LOCAL AGENCY INVESTMENT FUND (LAIF): A voluntary investment fund open to government entities and certain non-profit organizations in California that is managed by the State Treasurer's Office.

POOL: Investment pools that range from the State Treasurer's Office Local Agency Investment Fund (LAIF) to county pools, to Joint Powers Authorities (JPAs). These funds are not subject to the same SEC rules applicable to money market mutual funds.

MAKE WHOLE CALL: A type of call provision on a bond that allows the issuer to pay off the remaining debt early. Unlike a call option, with a make whole call provision, the issuer makes a lump sum payment that equals the net present value (NPV) of future coupon payments that will not be paid because of the call. With this type of call, an investor is compensated, or "made whole."

MARGIN: The difference between the market value of a security and the loan a broker makes using that security as collateral.

MARKET RISK: The risk that the value of securities will fluctuate with changes in overall market conditions or interest rates.

MARKET VALUE: The price at which a security can be traded.

MASTER REPURCHASE AGREEMENT: A written contract covering all future transactions between the parties to repurchase—reverse repurchase agreements that establishes each party's rights in the transactions. A master agreement will often specify, among other things, the right of the buyer-lender to liquidate the underlying securities in the event of default by the seller borrower.

MATURITY: The final date upon which the principal of a security becomes due and payable.

MEDIUM TERM NOTES: Unsecured, investment-grade senior debt securities of major corporations which are sold in relatively small amounts on either a continuous or an intermittent basis. MTNs are highly flexible debt instruments that can be structured to respond to market opportunities or to investor preferences.

MODIFIED DURATION: The percent change in price for a 100-basis point change in yields. Modified duration is the best single measure of a portfolio's or security's exposure to market risk.

MARKET: The market in which short-term debt instruments (T-bills, discount notes, commercial paper, and banker's acceptances) are issued and traded.

MONEY MARKET MUTUAL FUND: A mutual fund that invests exclusively in short-term securities. Examples of investments in money market funds are certificates of deposit and U.S. Treasury securities. Money market funds attempt to keep their net asset values at $1 per share.

MORTGAGE PASS-THROUGH SECURITIES: A securitized participation in the interest and principal cash flows from a specified pool of mortgages. Principal and interest payments made on the mortgages are passed through to the holder of the security.

MUNICIPAL SECURITIES: Securities issued by state and local agencies to finance capital and operating expenses.

MUTUAL FUND: An entity which pools the funds of investors and invests those funds in a set of securities which is specifically defined in the fund's prospectus. Mutual funds can be invested in various types of domestic and/or international stocks, bonds, and money market instruments, as set forth in the individual fund's prospectus. For most large, institutional investors, the costs associated with investing in mutual funds are higher than the investor can obtain through an individually managed portfolio.

NATIONALLY RECOGNIZED STATISTICAL RATING ORGANIZATION (NRSRO): A credit rating agency that the Securities and Exchange Commission in the United States uses for regulatory purposes. Credit rating agencies provide assessments of an investment's risk. The issuers of investments, especially debt securities, pay credit rating

agencies to provide them with ratings. The three most prominent NRSROs are Fitch, S&P, and Moody's.

NEGOTIABLE CERTIFICATE OF DEPOSIT (CD):). A short-term debt instrument that pays interest and is issued by a bank, savings or federal association, state or federal credit union, or state-licensed branch of a foreign bank. Negotiable CDs are traded in a secondary market and are payable upon order to the bearer or initial depositor (investor).

OFFER: The price asked by a seller of securities. (When you are buying securities, you ask for an offer.) See Asked and Bid.

OPEN MARKET OPERATIONS: Purchases and sales of government and certain other securities in the open market by the New York Federal Reserve Bank as directed by the FOMC in order to influence the volume of money and credit in the economy. Purchases inject reserves into the bank system and stimulate growth of money and credit; sales have the opposite effect. Open market operations are the Federal Reserve's most important and most flexible monetary policy tool.

PASSBOOK SAVINGS ACCOUNT: A savings account in which deposits and withdrawals are recorded in the depositor's passbook.

PASS-THOUGH SECURITY: A pool of fixed income securities backed by a package of assets (i.e. mortgages) where the holder receives the principal and interest payments.

PORTFOLIO: Collection of securities held by an investor.

PRIMARY DEALER: A financial institution (1) that is a trading counterparty with the Federal Reserve in its execution of market operations to carry out U.S. monetary policy, and (2) that participates for statistical reporting purposes in compiling data on activity in the U.S. Government securities market.

PRINCIPAL: The face value or par value of an investment.

PRUDENT INVESTOR STANDARD: Is a standard defined under State Government Code Section 53600.3 that states when investing, reinvesting, purchasing, acquiring, exchanging, selling, or managing public funds, a trustee shall act with care, skill, prudence, and diligence under the circumstances then prevailing, including, but not limited to, the general economic conditions and the anticipated needs of the City, that a prudent person acting in a like capacity and familiarity with those matters would use in the conduct of funds of a like character and with like aims, to safeguard the principal and maintain the liquidity needs of the City/Successor Agency to the Brea Redevelopment Agency. Within the limitations of this section and considering individual investments as part of an overall strategy, investments may be acquired as authorized by law.

PRUDENT PERSON (PRUDENT INVESTOR) RULE: A standard of responsibility which applies to fiduciaries. In California, the rule is stated as "Investments shall be managed with the care, skill, prudence and diligence, under the circumstances then prevailing, that a prudent person, acting in a like capacity and familiar with such matters, would use in the conduct of an enterprise of like character and with like aims to accomplish similar purposes."

QUALIFIED PUBLIC DEPOSITORIES: A financial institution which does not claim exemption from the payment of any sales or compensating use or ad valorem taxes under the laws of this state, which has segregated for the benefit of the commission eligible collateral having a value of not less than its maximum liability and which has been approved by the Public Deposit Protection Commission to hold public deposits.

RATE OF RETURN: The yield obtainable on a security based on its purchase price or its current market price. This may be the amortized yield to maturity on a bond the current income return.

REPURCHASE AGREEMENT: Short-term purchases of securities with a simultaneous agreement to sell the securities back at a higher price. From the seller's point of view, the same transaction is a reverse repurchase agreement.

REVERSE REPURCHASE AGREEMENT (REVERSE REPO): A reverse-repurchase agreement (reverse repo) involves an investor borrowing cash from a financial institution in exchange for securities. The investor agrees to repurchase the securities at a specified date for the same cash value plus an agreed upon interest rate. Although the transaction is similar to a repo, the purpose of entering into a reverse repo is quite different. While a repo is a straightforward investment of public funds, the reverse repo is a borrowing.

SAFEKEEPING: A service to bank customers whereby securities are held by the bank in the customer's name.

SECONDARY MARKET: A market made for the purchase and sale of outstanding issues following the initial distribution.

SECURITIES AND SECURITIES AND EXCHANGE COMMISSION (SEC): The U.S. Securities and Exchange Commission (SEC) is an independent federal government agency responsible for protecting investors, maintaining fair and orderly functioning of securities markets and facilitating capital formation. It was created by Congress in 1934 as the first federal regulator of securities markets. The SEC promotes full public disclosure, protects investors against fraudulent and manipulative practices in the market, and monitors corporate takeover actions in the United States.

SECURITIES AND EXCHANGE COMMISSION (SEC) RULE 15C315c3-1: An SEC rule setting capital requirements for brokers and dealers. Under Rule 15c3-1, a broker or dealer must have sufficient liquidity in order to cover the most pressing obligations. This is defined as having a certain amount of liquidity as a percentage of the broker/dealer's total obligations. If the percentage falls below a certain point, the broker or dealer may not be allowed to take on new clients and may have restrictions placed on dealings with current client.

STRUCTURED NOTE: A complex, fixed income instrument, which pays interest, based on a formula tied to other interest rates, commodities or indices. Examples include inverse floating rate notes which have coupons that increase when other interest rates are falling, and which fall when other interest rates are rising, and "dual index floaters," which pay interest based on the relationship between two other interest rates - for example, the yield on the ten-year Treasury note minus the Libor rate. Issuers of such notes lock in a reduced cost of borrowing by purchasing interest rate swap agreements.

SUPRANATURAL: A Supranational is a multi-national organization whereby member states transcend national boundaries or interests to share in the decision making to promote economic development in the member countries.

TOTAL RATE OF RETURN: A measure of a portfolio's performance over time. It is the internal rate of return, which equates the beginning value of the portfolio with the ending value; it includes interest earnings, realized and unrealized gains, and losses in the portfolio.

U.S. TREASURY OBLIGATIONS: Securities issued by the U.S. Treasury and backed by the full faith and credit of the United States. Treasuries are considered to have no credit risk and are the benchmark for interest rates on all other securities in the US and overseas. The Treasury issues both discounted securities and fixed coupon notes and bonds.

All securities issued with initial maturities of one year or less are issued as discounted instruments and are called Treasury bills. The Treasury currently issues three- and six-month T-bills at regular weekly auctions. It also issues "cash management" bills as needed to smooth out cash flows.

All securities issued with initial maturities of two to ten years are called Treasury notes and pay interest semi-annually.

TREASURY BONDS: All securities issued with initial maturities greater than ten years are called Treasury bonds. Like Treasury notes, they pay interest semi-annually.

UNIFORM NET CAPITAL RULE: Securities and Exchange Commission requirement that member firms as well as nonmember broker-dealers in securities maintain a maximum ratio of indebtedness to liquid capital of 15 to 1; also called net capital rule and net capital ratio. Indebtedness covers all money owed to a firm, including margin loans and commitments to purchase securities, one reason new public issues are spread among members of underwriting syndicates. Liquid capital includes cash and assets easily converted into cash.

YIELD TO MATURITY: The annualized internal rate of return on an investment which equates the expected cash flows from the investment to its cost.

City Of Brea / Successor Agency to the Brea Redevelopment Agency

FINAL

STATEMENT OF INVESTMENT POLICY

August 17, 2021

Purpose: This statement is intended to provide a guideline for the prudent investment of funds and to outline the policies for maximizing the efficiency of the City of Brea and Successor Agency to the Brea Redevelopment Agency ("City") cash management system. The ultimate goal is to enhance the economic status of the City while protecting its pooled funds. This investment policy has been prepared so as to be in conformance with all pertinent existing laws of the State of California for General Law cities.

Objective: The cash management system of the City is designed to accurately monitor and forecast expenditures and revenues, thus enabling the City to invest funds to the fullest extent possible. The City attempts to obtain a market rate of return without incurring undue risk to principal. The objectives of such investments are: 1) preserve capital, 2) maintain financial flexibility/liquidity, and 3) obtain a competitive rate of return on the City's investments.

Scope: This investment policy applies to the decisions and activities of the City with regard to investing the financial assets of all funds, including the following: General Fund, Special Revenue Funds, Assessment Funds, Enterprise Funds, Internal Service Funds, Capital Projects Funds, Debt Service Funds, Reserve Funds, Trust and Agency Funds, and any other funds that may be created from time to time. This policy does not apply retiree health care savings/trust/plan(s) or deferred compensation plans.

Investment Responsibility: Investment decisions of the City funds are the responsibility of the City Treasurer and/or Administrative Services Director, and shall comply with the Investment Policy of the City. These responsibilities include the authority to open accounts with banks, brokers and dealers, establish safekeeping accounts or other arrangements for the custody of securities and to execute such documents as may be necessary.

Those authorized to execute transactions for the City include the: 1) City Treasurer, 2) Administrative Services Director, 3) Financial Services Manager, and 4) those specifically deputized by the City Treasurer and Administrative Services Director with said authorization to be filed with the City Clerk. The City Treasurer and Administrative Services Director shall insure that an authorized person is available at all times to execute the City's investments. Investment managers, brokers and dealers are to be provided with a list of specified names of those persons authorized to execute transactions. The City Council may authorize the delegation of investments to an outside investment manager.

Reporting: The Administrative Services Director shall be responsible for reporting the status of investments to the City Council and City Manager on a monthly basis. These reports will disclose, at a minimum, the following information about the characteristics of the City's portfolio:

A. An asset listing showing par value, cost and accurate and complete market value of each security, type of investment, issuer, and interest rate.

B. Monthly transactions for the period.
C. A one-page summary report that shows:
    1. Average maturity of the portfolio and modified duration of the portfolio;
    2. Maturity distribution of the portfolio;
    3. Average portfolio credit quality; and,
    4. Time-weighted total rate of return for the portfolio for the prior one month, three months, twelve months, year to date, and since inception compared to the City's market benchmark returns for the same periods;
D. A statement of compliance with investment policy, including a schedule of any transactions or holdings which do not comply with this policy or with the California Government Code, including a justification for their presence in the portfolio and a timetable for resolution.
E. A statement that the City has adequate funds to meet its cash flow requirements for the next six months.

Reports are to be submitted to the City Council and City Manager by the 3rd City Council meeting following the end of the reporting month.

The Investment Advisory Committee will review the status of investments on a quarterly basis. These reports shall include the type of investment, institution, face amount, market value, book value, interest rate, date of maturity, compliance to the investment policy.

If the City has an outside Investment Manager, the Investment Manager shall periodically report on the activity and results of the funds being managed by the Investment Manager. Additionally, the Investment Manager shall notify the Investment Advisory Committee when investment portfolios demonstrate low performance, if any, which occurs between each periodic report.

Prudence: The standard of prudence to be applied by the City Treasurer, Administrative Services Director, Financial Services Manager, and those specifically deputized by the City Treasurer and Administrative Services Director with said authorization to be filed with the City Clerk shall be the "prudent investor" standard, as defined under Government Code Section 53600.3 which states, "When investing, reinvesting, purchasing, acquiring, exchanging, selling, or managing public funds, a trustee shall act with care, skill, prudence, and diligence under the circumstances then prevailing, including, but not limited to, the general economic conditions and the anticipated needs of the City, that a prudent person acting in a like capacity and familiarity with those matters would use in the conduct of funds of a like character and with like aims, to safeguard the principal and maintain the liquidity needs of the City/Successor Agency to the Brea Redevelopment Agency. Within the limitations of this section and considering individual investments as part of an overall strategy, investments may be acquired as authorized by law."

Ethics and Conflicts of Interest: Officers and employees involved in the City investment process shall refrain from personal business activity that could conflict with proper execution of the investment program or which could impair their ability to make impartial investment decisions. City employees and investment officials shall disclose any material financial interests in financial institutions that conduct business within the City, and they shall further disclose any personal financial/investment positions that could be related to the performance of the City's portfolio. City employees and officers shall refrain

from undertaking personal investment transactions with the same individual with whom business is conducted on behalf of the City.

Investment Instruments: Funds of the City may be invested in any instrument allowable under current legislation of the State of California (Government Code Section 53600 et sec.) so long as the investment is appropriate and consistent with this Investment Policy taking into consideration the City's investment objectives. Investment instruments may include:

- U.S. Treasury Obligations (Bills, Notes and Bonds)
- U.S. Government Agency Securities and Instrumentality's of Government Sponsored Corporations, including a maximum of 5% in callable bonds issued by such agencies
- Banker's Acceptances
- Commercial Paper
- Repurchase Agreements (requires a master repurchase agreement to be signed and on file with the bank or broker/dealer)
- Certificates of Deposit
- Negotiable Certificates of Deposit
- Passbook Savings Accounts
- Interest Bearing Checking Accounts
- Medium Term Corporate Notes
- Bank Money Market Accounts
- Local Agency Investment Fund (State Pool)
- County of Orange Investment Fund (County Pool)
- Other investments that are, or may become, legal investments through the State of California Government Code.

Provisions of Government Code Section 53601 shall be adhered to at all times. This includes, but is not limited to, the following restrictions:

- Bankers Acceptances cannot exceed 40% of the portfolio nor exceed 180 days;
- Commercial Paper cannot exceed 25% of the portfolio. Commercial Paper must be rated P-1 (Moody's), A-1 (Standard & Poor's) and cannot exceed 270 days;
- Money Market Funds cannot exceed 20% of the portfolio;
- Medium Term Corporate Notes cannot exceed 30% of the portfolio and must carry a minimum A rating;
- Pass-through securities including Collateralized Mortgage Obligations cannot exceed 20% of the portfolio.
    - Asset Backed Securities are limited to a maximum of 10% of the portfolio at time of purchase
        - Maximum maturity of 5 years
        - Asset Backed Security must be rated AA or higher
- Supranational Securities must be rated AA or higher, cannot exceed 15% of the portfolio and no more than 5% of portfolio per issuer. The maximum maturity cannot exceed 5 years.
- Additionally, the City will use the guidelines established by the joint committee of the California Municipal Treasurers Association and the California Society of Municipal Finance Officers as the basis for investing in government investment pools.

For purposes of complying with legal investment limitations, the percentage references pertaining to the above refers to the maturity value of the portfolio at the time of purchase.

If a security owned by the City is downgraded to a level below the requirements of this policy, making the security ineligible for additional purchases, the following steps will be taken:

- Any actions taken related to the downgrade by the investment manager will be communicated to the City Council, the Investment Advisory Committee, City Treasurer and the Administrative Services Director within two (2) business days.

- If a decision is made to retain the security, the credit situation will be monitored and reported to the City Council.

Prohibited Investments: The City shall not invest any funds in derivatives, inverse floaters, range notes, or interest- only strips that are derived from a pool of mortgages. The City shall not invest any funds in any security that could result in a zero interest accrual if held to maturity.

However, the City is authorized to invest in securities that could result in zero or negative interest accrual if held to maturity if they are issued by or backed by the United States Government. Negative interest rate securities in United States Government securities will only be permitted in the portfolio in the event the United States Federal Reserve adopts a negative interest rate monetary policy framework. Notification to the City Council, the Investment Advisory Committee, the City Treasurer, and the Administrative Services Director will be given within two (2) business days when securities of this type are being added to the portfolio, this allows for full disclosure and understanding of the strategy given the market conditions.

Collateralization: Collateralization shall be required on two types of investments: Certificates of deposit and repurchase (and reverse repurchase) agreements. A collateral agreement must be current and on file before any funds can be transferred for collateralized certificates of deposit.

Collateral shall be held by an independent third party with whom the City has a current written custodial agreement. A clearly marked evidence of ownership (safekeeping receipt) must be supplied to the City and retained. The right of collateral substitution is granted in accordance with the following requirements:

A. Certificates of Deposit
   1. Government securities used as collateral require one hundred and ten (110) percent of market value to the face amount of the deposit
   2. Promissory notes secured by first trust deeds used as collateral require one hundred and fifty (150) percent of market value to the face amount of the deposit
   3. Irrevocable letters of Credit issued by the Federal Home Loan Bank of San Francisco require one hundred and five (105) percent of market value to the face amount of the deposit

B. Repurchase and Reverse Repurchase Agreements

1. Only U.S. Treasury securities or federal agency securities are acceptable collateral. All securities underlying repurchase agreements must be delivered to the City's custodian bank versus payment or be handled under a properly executed tri-party repurchase agreement. The total market value of all collateral for each repurchase agreement must equal or exceed one hundred and two (102) percent of the total dollar value of the money invested by the City for the term of the investment. For any repurchase agreement with a term of more than one (1) day, the value of the underlying securities must be reviewed on an ongoing basis according to market conditions. Market value must be calculated each time there is a substitution of collateral.
2. The City or its trustee shall have perfected first security interest under the Uniform Commercial Code in all securities subject to a repurchase agreement.

Investment Criteria: Criteria for selecting investments and the order of priority are:

A. Safety

The safety and risk associated with an investment refers to the potential loss of principal, interest or a combination of these amounts. The City only operates in those investments that are considered very safe.

B. Liquidity

This refers to the ability to convert an investment into cash at any moment in time with a minimal chance of losing some portion of principal or interest. Liquidity is an important investment quality when there is an occasional need for funds. The potential fluctuations in market value and the expected future availability of reasonable bids in the market are to be important considerations when selecting an investment.

C. Yield

Yield is the potential dollar earnings an investment can provide and sometimes is described as the rate of return.

Diversification: The City will diversify the use of investment instruments to avoid incurring unreasonable risks inherent in over-investing in specific instruments, or individual financial institutions. In no case, without prior notification and approval from the City Council, shall the amount invested in one entity at the time of purchase exceed 5% of the total portfolio, with the following exceptions:

- U.S. Federal Government Agency Obligations of one specific entity cannot exceed 25% of the maturity value of the portfolio at the time of purchase.
- U.S. Treasury Obligations (Treasury Bills, Treasury Strips, Bonds, Notes) directly backed by the full faith and credit of the United States for payment of principal and interest shall not be subject to a maximum percentage of the portfolio.
- Approved State and County investment pools together cannot exceed 60% of the maturity value of the portfolio at the time of purchase, and no more than 40% of the maturity value at the time of purchase can be deposited in any one particular pool.

Investment Pools: The City Treasurer, Administrative Services Director and City Council

have determined that use of investment pools is a practical investment option. The City will utilize guidelines established by the California Municipal Treasurers Association and California Society of Municipal Finance Officers to ensure the safety of investment pools which includes a thorough investigation of the pool/fund prior to investing, and on a continual basis. There shall be a questionnaire developed which will answer the following general questions:

- A description of eligible investment securities, and a written statement of investment policy and objectives.
- A description of interest calculations and how it is distributed, and how gains and losses are treated.
- A description of how the securities are safeguarded (including the settlement processes), and how often the securities are priced and the program audited.
- A description of who may invest in the program, how often, what size deposit and withdrawal are allowed.
- A schedule for receiving statements and portfolio listings.
- Are reserves, retained earnings, etc. utilized by the pool/fund?
- A fee schedule, and when and how is it assessed.
- Is the pool/fund eligible for bond proceeds and/or will it accept such proceeds?

Maturity Limitations: Every investment instrument purchased must have a term remaining to maturity of less than five years, unless the investment is for the Senior Low Cost Housing Subsidy Program, bond proceeds for the Reserve Fund, funded/capitalized interest fund; or the City Council has granted express authority to make that investment, either specifically or as part of an investment program approved by the City Council no more than three months prior to the investment. When possible, a minimum of 25% of the portfolio should be in maturities of one year or less.

Safekeeping and Custody: All security transactions, including collateral for repurchase agreements, entered into by the City shall be conducted on a delivery-versus-payment (DVP) basis which ensure that securities are deposited in an eligible financial institution prior to the release of funds. Securities shall be held by a third-party custodian designated by the City and evidenced by safekeeping receipts with a written custodial agreement. The only exception to the foregoing shall be depository accounts and securities purchases made with: LAIF, direct time certificates of deposit and money market mutual funds, since the purchased securities are not deliverable. Settlement instructions sent to the safekeeping agent shall require authorization.

Monthly trust statements are reconciled to the Investment Reports by the City's Accountant. The City's Accountant performs reconciliation of the monthly bank statements. The periodic review of the investment portfolio, including investment types, purchase price, market values, maturity dates, and investment yields as well as conformance to the stated investment policy will be performed by the Investment Advisory Committee.

Qualified Broker/Dealers: For those investments managed directly by the City, the City shall maintain a listing of broker/dealers that are approved by the Investment Advisory Committee for investment purposes. All broker/dealers who desire to bid for investment transactions must supply the City with the following information; a completed broker/dealer

questionnaire, audited financial statements, proof of National Association of Security Dealers' certification, trading resolution, proof of California registration, and certification of having read the City of Brea's investment policy.

The Investment Advisory Committee will conduct an annual review of the qualified broker/dealers. The decision to add or subtract from the authorized list of broker/dealers will be based on many factors to include, but not limited to, products offered, service levels, references, etc. No single factor will determine the Committee's final decision. A current audited financial statement is required to be on file for each broker/dealer with which the City of Brea invests. The City's authorized brokers/dealers shall provide written confirmation of having read and understood the City's investment policy and that all investments recommended by them will be suitable for the City of Brea.

Selection of broker/dealers used by an external investment adviser retained by the City will be at the sole discretion of the adviser. Where possible, transactions with broker/dealers shall be selected on a competitive basis and their bid or offering prices shall be recorded. If there is no other readily available competitive offering, best efforts will be made to document quotations for comparable or alternative securities. When purchasing original issue instrumentality securities, no competitive offerings will be required as all dealers in the selling group offer those securities at the same original issue price.

Monitoring and Adjusting the Portfolio: The City Treasurer and Administrative Services Director will routinely monitor the contents, performance and risk profile of the investment portfolio, the investment alternatives, and the relative values of competing investment instruments and will adjust the portfolio accordingly based on the approved Statement of Investment Policy on a quarterly basis. The City Council shall also bear a responsibility for monitoring the implementation of this policy and the safeguarding of the City's Treasury.

Performance Standards: The investment portfolio shall be designed to attain a market-average rate of return throughout budgetary and economic cycles, taking into account the City's risk constraints, the cash flow characteristics of the portfolio, and state and local laws, ordinances or resolutions that restrict investments.

The Administrative Services Director shall monitor and evaluate the portfolio's performance relative to market benchmark, which will be included in the monthly report of investments. The Treasurer and Administrative Services Director shall select an appropriate, readily available index to use as a market benchmark.

Bond Funds/Arbitrage: The U.S. Tax Reform Act of 1986 requires the City to perform annual arbitrage calculations and rebate excess earnings from investments of proceeds of bond issues sold after the effective date of this law to the U.S. Treasury. This arbitrage calculation may be contracted with an outside source to provide the necessary technical assistance to comply with this regulation. Funds subject to the 1986 Tax Reform Act will be kept segregated from other funds and records will be kept in a fashion to facilitate the calculations. The City's investment position relative to the new arbitrage restrictions is to continue pursuing the maximum yield on applicable investments while ensuring the safety of capital and liquidity. It is a fiscally sound position to continue maximization of yield and to rebate excess earnings, if necessary.

Review/or Modification: The Investment Advisory Committee shall be responsible for reviewing and recommending modifications to the Statement of Investment Policy and submitting it to the City Council for approval on an annual basis. However, the City Treasurer and Administrative Services Director may, at any time, further restrict the investments approved for purchase as deemed appropriate.

Internal Controls: The City Treasurer and Administrative Services Director shall organize the investment function so that specific responsibility for the performance of duties is assigned with a clear line of authority and reporting. The functions of authorizing, executing and recording transactions, custody of investments and performing reconciliation's will be handled by separate persons to reduce the risk that anyone person is in a position to conceal errors or fraud in the normal course of duty. While no internal control system, however elaborate, can guarantee absolute assurance that the City's assets are safeguarded, it is the intent of the City's internal control system to provide reasonable assurance that management of the investment function meets the City's objectives. These internal controls shall be reviewed annually by the independent auditor who shall review and comment upon the content of this policy, the effectiveness of its implementation and applicable management controls with regard to its implementation and the safeguarding of the City's Treasury funds.

Investment Advisory Committee: An Investment Advisory Committee ("Committee") is established to review and make recommendations on the Investment Policy and investment strategy of the City of Brea/Successor Agency to the Brea Redevelopment Agency and to strengthen the internal control of the management of the City's funds. The following are the duties and responsibilities of the Committee:

A. <u>Purpose</u>
   1. To review and make recommendations on investment policy and investment strategy of the City of Brea/Successor Agency to the Brea Redevelopment Agency.
   2. To review the City's investments on a periodic basis and to recommend any exceptions and/or changes to the policy, to the City Council for review and approval.

B. <u>Composition of Committee</u>
   1. City Treasurer
   2. City Council Member, who serves as the Chair (selected by the City Council)
   3. Administrative Services Director
   4. Financial Services Manager
   5. Three (3) Brea Citizens (selected by the City Council with the City Treasurer as subcommittee members)

C. <u>Functions</u>
   1. Annually (or as needed)
      a. To review and approve Statement of Investment Policy
      b. To review the financial condition and registrations of qualified broker/dealers (Only required when investments are managed by the City)

   2. Monthly or Quarterly
      a. To review the City's investments

b. To recommend any modifications to the Investment Policy
c. To develop and carry out the ongoing investment strategy in accordance with the Investment Policy
d. To provide a status report at a study session of the City Council as requested

The function of the Committee is not to inhibit the daily operation of the Administrative Services Department, but to provide policy guidelines within which to work on a day-to-day basis. By this, it is meant that each individual trade need not be approved by the Committee at the time it is transacted provided that it falls within the scope of the Statement of Investment Policy.

Disclosure: Members of the Committee shall be required to comply with the Fair Political Practices Act reporting requirements (Form 700) on an annual basis and submit filings to the City Clerk's Office.

SEGREGATION OF RESPONSIBILITIES
(External)

FUNCTION	RESPONSIBILITY
Develop formal Statement of Investment Policy	Administrative Services Director Financial Services Manager
Recommend modifications to Investment Policy	City Treasurer Administrative Services Director Financial Services Manager
Review formal Statement of Investment Policy and recommend a Council action	City Treasurer Investment Advisory Committee
Adopt formal Statement of Investment Policy	City Council
Select investments	Outside Investment Manager
Execute investment transactions and fax or email completed trade information to City	Outside Investment Manager
Review transactions for compliance with investment policy	City Treasurer Administrative Services Director or Financial Services Manager
Investment verification (match broker confirmation to trade information provided by outside Investment Manager to City investment records)	Administrative Services Director or Financial Services Manager
Record investment transactions into City's accounting records	City Accountant
Reconcile investment records to accounting records and bank statements and report any variances to Administrative Services Director and City Treasurer	City Accountant
Security	All investment securities will be held in safekeeping in the trust department of the City's Depository Bank, or other third party custodian as designated by the City Treasurer or Administrative Services Director.

SEGREGATION OF RESPONSIBILITIES
(Internal)

FUNCTION	RESPONSIBILITY
Develop formal Statement of Investment Policy	City Treasurer Administrative Services Director Financial Services Manager
Recommend modifications to Statement of Investment Policy	City Treasurer Administrative Services Director Financial Services Manager Investment Advisory Committee
Review formal Statement of Investment Policy and recommend City Council action	Investment Advisory Committee
Annually review and adopt a formal Statement of Investment Policy	City Council
Select investments	Administrative Services Director or Financial Services Manager
Approve transactions	Administrative Services Director
Execute investment transactions	Administrative Services Director
Investment verification (match broker confirmation to City investment records)	Administrative Services Director or Financial Services Manager
Record investment transactions into City's accounting records	City Accountant
Reconcile investment records to accounting records and bank statements and report any variances to the Administrative Services Director	City Accountant
Security	All investment securities will be held in safekeeping in the trust department of the City's Depository Bank, or other third party custodian as designated by the City Treasurer or Administrative Services Director

GLOSSARY OF INVESTMENTS TERMS

AGENCIES: Shorthand market terminology for any obligation issued by *a government-sponsored entity (GSE),* or a *federally related institution*. Most obligations of GSEs are not guaranteed by the full faith and credit of the US government. Examples are:

FFCB: The Federal Farm Credit Bank System provides credit and liquidity in the agricultural industry. FFCB issues discount notes and bonds.

FHLB: The Federal Home Loan Bank provides credit and liquidity in the housing market. FHLB issues discount notes and bonds.

FHLMC: Like FHLB, the Federal Home Loan Mortgage Corporation provides credit and liquidity in the housing market. FHLMC, also called "Freddie MacFreddieMac" issues discount notes, bonds and mortgage pass-through securities.

FNMA: Like FHLB and Freddie MacFreddieMac, the Federal National Mortgage Association was established to provide credit and liquidity in the housing market. FNMA, also known as "Fannie MaeFannieMae," issues discount notes, bonds and mortgage pass-through securities.

GNMA: The Government National Mortgage Association, known as "Ginnie MaeGinnieMae," issues mortgage pass-through securities, which are guaranteed by the full faith and credit of the US Government.

PEFCO: The Private Export Funding Corporation assists exporters. Obligations of PEFCO are not guaranteed by the full faith and credit of the US government.

TVA: The Tennessee Valley Authority provides flood control and power and promotes development in portions of the Tennessee, Ohio, and Mississippi River valleys. TVA currently issues discount notes and bonds.

ASSET BACKED SECURITIES: Securities supported by pools of installment loans or leases or by pools of revolving lines of credit.

AVERAGE LIFE: In mortgage-related investments, including CMOs, the average time to expected receipt of principal payments, weighted by the amount of principal expected.

BANKER'S ACCEPTANCE: A money market instrument created to facilitate international trade transactions. It is highly liquid and safe because the risk of the trade transaction is transferred to the bank which "accepts" the obligation to pay the investor.

BENCHMARK: A comparison security or portfolio. A performance benchmark is a partial market index, which reflects the mix of securities allowed under a specific investment policy.

BROKER: A broker brings buyers and sellers together for a transaction for which the broker receives a commission. A broker does not sell securities from his own position.

CALIFORNIA MUNICIPAL TREASURERS ASSOCIATION (CMTA): Is the professional society of active public treasurers of California counties, cities and special districts. It sets ethical standards for the treasury profession in state and local governments in California.

CALIFORNIA SOCIETY OF MUNICIPAL FINANCE OFFICERS (CSMFO): Is a professional association of state, county and local government finance officers in

California. CSMFO is the statewide organization serving all of California municipal finance professionals, an affiliate of the nationwide Government Finance Officers Association (GFOA).

CALLABLE: A callable security gives the issuer the option to call it from the investor prior to its maturity. The main cause of a call is a decline in interest rates. If interest rates decline, the issuer will likely call its current securities and reissue them at a lower rate of interest.

CERTIFICATE OF DEPOSIT (CD): A time deposit with a specific maturity evidenced by a certificate.

CERTIFICATE OF DEPOSIT ACCOUNT REGISTRY SYSTEM (CDARS): A private placement service that allows local agencies to purchase more than $250,000 in CDs from a single financial institution (must be a participating institution of CDARS) while still maintaining FDIC insurance coverage. CDARS is currently the only entity providing this service. CDARS facilitates the trading of deposits between the California institution and other participating institutions in amounts that are less than $250,000 each, so that FDIC coverage is maintained.

COLLATERAL: **COLLATERAL.** Securities or cash pledged by a borrower to secure repayment of a loan or repurchase agreement. Also, securities pledged by a financial institution to secure deposits of public monies.

COLLATERALIZED BANK DEPOSIT: A bank deposit that is collateralized at least 100% (principal plus interest to maturity). The deposit is collateralized using assets set aside by the issuer such as Treasury securities or other qualified collateral to secure the deposit in excess of the limit covered by the Federal Deposit Insurance Corporation.

COLLATERALIZED MORTGAGE OBLIGATION (CMO): Classes of bonds that redistribute the cash flows of mortgage securities (and whole loans) to create securities that have different levels of prepayment risk, as compared to the underlying mortgage securities.

COLLATERIALIZED TIME DEPOSIT: Time deposits that are collateralized at least 100% (principal plus interest to maturity). These instruments are collateralized using assets set aside by the issuer such as Treasury securities or other qualified collateral to secure the deposit in excess of the limit covered by the Federal Deposit Insurance Corporation.
PAPER: The short-term unsecured debt of corporations.

COUPON: The rate of return at which interest is paid on a bond.

CREDIT RISK: The risk that principal and/or interest on an investment will not be paid in a timely manner due to changes in the condition of the issuer.
A dealer acts as a principal in security transactions, selling securities from and buying securities for his own position.

DEBENTURE: A bond secured only by the general credit of the issuer.
VS. PAYMENT (DVP): A securities industry procedure whereby payment for a security must be made at the time the security is delivered to the purchaser's agent.

DERIVATIVE: Any security that has principal and/or interest payments which are subject

to uncertainty (but not for reasons of default or credit risk) as to timing and/or amount, or any security which represents a component of another security which has been separated from other components ("Stripped" coupons and principal). A derivative is also defined as a financial instrument the value of which is totally or partially derived from the value of another instrument, interest rate, or index.

The difference between the par value of a bond and the cost of the bond, when the cost is below par. Some short-term securities, such as T-bills and banker's acceptances, are known as discount securities. They sell at a discount from par and return the par value to the investor at maturity without additional interest. Other securities, which have fixed coupons, trade at a discount when the coupon rate is lower than the current market rate for securities of that maturity and/or quality.

DISCOUNT SECURITIES: Non-interest bearing money market instruments that are issued a discount and redeemed at maturity for full face value *(e.g., U.S. Treasury Bills.)*

DIVERSIFICATION: Dividing investment funds among a variety of investments to avoid excessive exposure to any one source of risk.

DURATION: The weighted average time to maturity of a bond where the weights are the present values of the future cash flows. Duration measures the price sensitivity of a security to changes interest rates.

FEDERAL CREDIT AGENCIES: Agencies of the Federal government set up to supply credit to various classes of institutions and individuals, *e.g.*, S&L's, small business firms, students, farmers, farm cooperatives, and exporters.

FEDERAL DEPOSIT INSTURANCE CORPORATION (FDIC): The Federal Deposit Insurance Corporation (FDIC) is an independent federal agency insuring deposits in U.S. banks and thrifts in the event of bank failures. The FDIC was created in 1933 to maintain public confidence and encourage stability in the financial system through the promotion of sound banking practices.

FEDERAL FUNDS RATE: The rate of interest at which Fed funds are traded. This rate is currently pegged by the Federal Reserve through open-market operations.

FEDERAL HOME LOAN BANKS (FHLB): Government sponsored wholesale banks (currently 12 regional banks), which lend funds and provide correspondent banking services to member commercial banks, thrift institutions, credit unions and insurance companies. The mission of the FHLBs is to liquefy the housing related assets of its members who must purchase stock in their district Bank.

FEDERAL NATIONAL MORTGAGE ASSOCIATION (FNMA): FNMA, like GNMA was chartered under the Federal National Mortgage Association Act in 1938. FNMA is a federal corporation working under the auspices of the Department of Housing and Urban Development (HUD). It is the largest single provider of residential mortgage funds in the United States. Fannie Mae, as the corporation is called, is a private stockholder-owned corporation. The corporation's purchases include a variety of adjustable mortgages and second loans, in addition to fixed-rate mortgages. FNMA's securities are also highly liquid and are widely accepted. FNMA assumes and guarantees that all security holders will receive timely payment of principal and interest.

FEDERAL OPEN MARKET COMMITTEE (FOMC): Consists of seven members of the Federal Reserve Board and five of the twelve Federal Reserve Bank Presidents. The President of the New York Federal Reserve Bank is a permanent member, while the other Presidents serve on a rotating basis. The Committee periodically meets to set Federal Reserve guidelines regarding purchases and sales of Government Securities in the open market as a means of influencing the volume of bank credit and money.

FEDERAL RESERVE SYSTEM: The central bank of the United States created by Congress and consisting of a seven member Board of Governors in Washington, D.C., 12 regional banks and about 5,700 commercial banks that are members of the system.

GOVERNMENT NATIONAL MORTGAGE ASSOCIATION (GNMA or Ginnie Mae): Securities influencing the volume of bank credit guaranteed by GNMA and issued by mortgage bankers, commercial banks, savings and loan associations, and other institutions. Security holder is protected by full faith and credit of the U.S. Government. Ginnie Mae securities are backed by the FHA, VA or FHA mortgages. The term “pass-throughs” is often used to describe Ginnie Maes.

INTEREST: The amount earned while owning a debt security, generally calculated as a percentage of the principal amount.

INVERSE FLOATER: A bond or other type of debt whose coupon rate has an inverse relationship to a benchmark rate. An inverse floater adjusts its coupon payment as the interest rate changes. This investment is prohibited under in the City’s and Successor Agency to the Brea Redevelopment Agency Investment Policy.

FEDERALLY INSURED TIME DEPOSIT: A time deposit is an interest-bearing bank deposit account that has a specified date of maturity, such as a certificate of deposit (CD). These deposits are limited to funds insured in accordance with FDIC insurance deposit limits.

LEVERAGE: Borrowing funds in order to invest in securities that have the potential to pay earnings at a rate higher than the cost of borrowing.

LIQUIDITY: The speed and ease with which an asset can be converted to cash.

LOCAL AGENCY INVESTMENT FUND (LAIF): A voluntary investment fund open to government entities and certain non-profit organizations in California that is managed by the State Treasurer’s Office.

POOL: Investment pools that range from the State Treasurer’s Office Local Agency Investment Fund (LAIF) to county pools, to Joint Powers Authorities (JPAs). These funds are not subject to the same SEC rules applicable to money market mutual funds.

MAKE WHOLE CALL: A type of call provision on a bond that allows the issuer to pay off the remaining debt early. Unlike a call option, with a make whole call provision, the issuer makes a lump sum payment that equals the net present value (NPV) of future coupon payments that will not be paid because of the call. With this type of call, an investor is compensated, or "made whole."

MARGIN: The difference between the market value of a security and the loan a broker makes using that security as collateral.

MARKET RISK: The risk that the value of securities will fluctuate with changes in overall market conditions or interest rates.

MARKET VALUE: The price at which a security can be traded.

MASTER REPURCHASE AGREEMENT: A written contract covering all future transactions between the parties to repurchase—reverse repurchase agreements that establishes each party's rights in the transactions. A master agreement will often specify, among other things, the right of the buyer-lender to liquidate the underlying securities in the event of default by the seller borrower.

MATURITY: The final date upon which the principal of a security becomes due and payable.

MEDIUM TERM NOTES: Unsecured, investment-grade senior debt securities of major corporations which are sold in relatively small amounts on either a continuous or an intermittent basis. MTNs are highly flexible debt instruments that can be structured to respond to market opportunities or to investor preferences.

MODIFIED DURATION: The percent change in price for a 100-basis point change in yields. Modified duration is the best single measure of a portfolio's or security's exposure to market risk.
MARKET: The market in which short-term debt instruments (T-bills, discount notes, commercial paper, and banker's acceptances) are issued and traded.

MONEY MARKET MUTUAL FUND: A mutual fund that invests exclusively in short-term securities. Examples of investments in money market funds are certificates of deposit and U.S. Treasury securities. Money market funds attempt to keep their net asset values at $1 per share.

MORTGAGE PASS-THROUGH SECURITIES: A securitized participation in the interest and principal cash flows from a specified pool of mortgages. Principal and interest payments made on the mortgages are passed through to the holder of the security.

MUNICIPAL SECURITIES: Securities issued by state and local agencies to finance capital and operating expenses.

MUTUAL FUND: An entity which pools the funds of investors and invests those funds in a set of securities which is specifically defined in the fund's prospectus. Mutual funds can be invested in various types of domestic and/or international stocks, bonds, and money market instruments, as set forth in the individual fund's prospectus. For most large, institutional investors, the costs associated with investing in mutual funds are higher than the investor can obtain through an individually managed portfolio.

NATIONALLY RECOGNIZED STATISTICAL RATING ORGANIZATION (NRSRO): A credit rating agency that the Securities and Exchange Commission in the United States uses for regulatory purposes. Credit rating agencies provide assessments of an investment's risk. The issuers of investments, especially debt securities, pay credit rating

agencies to provide them with ratings. The three most prominent NRSROs are Fitch, S&P, and Moody's.

NEGOTIABLE CERTIFICATE OF DEPOSIT (CD):). A short-term debt instrument that pays interest and is issued by a bank, savings or federal association, state or federal credit union, or state-licensed branch of a foreign bank. Negotiable CDs are traded in a secondary market and are payable upon order to the bearer or initial depositor (investor).

OFFER: The price asked by a seller of securities. (When you are buying securities, you ask for an offer.) See Asked and Bid.

OPEN MARKET OPERATIONS: Purchases and sales of government and certain other securities in the open market by the New York Federal Reserve Bank as directed by the FOMC in order to influence the volume of money and credit in the economy. Purchases inject reserves into the bank system and stimulate growth of money and credit; sales have the opposite effect. Open market operations are the Federal Reserve's most important and most flexible monetary policy tool.

PASSBOOK SAVINGS ACCOUNT: A savings account in which deposits and withdrawals are recorded in the depositor's passbook.

PASS-THOUGH SECURITY: A pool of fixed income securities backed by a package of assets (i.e. mortgages) where the holder receives the principal and interest payments.

PORTFOLIO: Collection of securities held by an investor.

PRIMARY DEALER: A financial institution (1) that is a trading counterparty with the Federal Reserve in its execution of market operations to carry out U.S. monetary policy, and (2) that participates for statistical reporting purposes in compiling data on activity in the U.S. Government securities market.

PRINCIPAL: The face value or par value of an investment.

PRUDENT INVESTOR STANDARD: Is a standard defined under State Government Code Section 53600.3 that states when investing, reinvesting, purchasing, acquiring, exchanging, selling, or managing public funds, a trustee shall act with care, skill, prudence, and diligence under the circumstances then prevailing, including, but not limited to, the general economic conditions and the anticipated needs of the City, that a prudent person acting in a like capacity and familiarity with those matters would use in the conduct of funds of a like character and with like aims, to safeguard the principal and maintain the liquidity needs of the City/Successor Agency to the Brea Redevelopment Agency. Within the limitations of this section and considering individual investments as part of an overall strategy, investments may be acquired as authorized by law.

PRUDENT PERSON (PRUDENT INVESTOR) RULE: A standard of responsibility which applies to fiduciaries. In California, the rule is stated as "Investments shall be managed with the care, skill, prudence and diligence, under the circumstances then prevailing, that a prudent person, acting in a like capacity and familiar with such matters, would use in the conduct of an enterprise of like character and with like aims to accomplish similar purposes."

QUALIFIED PUBLIC DEPOSITORIES: A financial institution which does not claim exemption from the payment of any sales or compensating use or ad valorem taxes under the laws of this state, which has segregated for the benefit of the commission eligible collateral having a value of not less than its maximum liability and which has been approved by the Public Deposit Protection Commission to hold public deposits.

RATE OF RETURN: The yield obtainable on a security based on its purchase price or its current market price. This may be the amortized yield to maturity on a bond the current income return.

REPURCHASE AGREEMENT: Short-term purchases of securities with a simultaneous agreement to sell the securities back at a higher price. From the seller's point of view, the same transaction is a reverse repurchase agreement.

REVERSE REPURCHASE AGREEMENT (REVERSE REPO): A reverse-repurchase agreement (reverse repo) involves an investor borrowing cash from a financial institution in exchange for securities. The investor agrees to repurchase the securities at a specified date for the same cash value plus an agreed upon interest rate. Although the transaction is similar to a repo, the purpose of entering into a reverse repo is quite different. While a repo is a straightforward investment of public funds, the reverse repo is a borrowing.

SAFEKEEPING: A service to bank customers whereby securities are held by the bank in the customer's name.

SECONDARY MARKET: A market made for the purchase and sale of outstanding issues following the initial distribution.

SECURITIES AND SECURITIES AND EXCHANGE COMMISSION (SEC): The U.S. Securities and Exchange Commission (SEC) is an independent federal government agency responsible for protecting investors, maintaining fair and orderly functioning of securities markets and facilitating capital formation. It was created by Congress in 1934 as the first federal regulator of securities markets. The SEC promotes full public disclosure, protects investors against fraudulent and manipulative practices in the market, and monitors corporate takeover actions in the United States.

SECURITIES AND EXCHANGE COMMISSION (SEC) RULE 15C315c3-1: An SEC rule setting capital requirements for brokers and dealers. Under Rule 15c3-1, a broker or dealer must have sufficient liquidity in order to cover the most pressing obligations. This is defined as having a certain amount of liquidity as a percentage of the broker/dealer's total obligations. If the percentage falls below a certain point, the broker or dealer may not be allowed to take on new clients and may have restrictions placed on dealings with current client.

STRUCTURED NOTE: A complex, fixed income instrument, which pays interest, based on a formula tied to other interest rates, commodities or indices. Examples include inverse floating rate notes which have coupons that increase when other interest rates are falling, and which fall when other interest rates are rising, and "dual index floaters," which pay interest based on the relationship between two other interest rates - for example, the yield on the ten-year Treasury note minus the Libor rate. Issuers of such notes lock in a reduced cost of borrowing by purchasing interest rate swap agreements.

SUPRANATURAL: A Supranational is a multi-national organization whereby member states transcend national boundaries or interests to share in the decision making to promote economic development in the member countries.

TOTAL RATE OF RETURN: A measure of a portfolio's performance over time. It is the internal rate of return, which equates the beginning value of the portfolio with the ending value; it includes interest earnings, realized and unrealized gains, and losses in the portfolio.

U.S. TREASURY OBLIGATIONS: Securities issued by the U.S. Treasury and backed by the full faith and credit of the United States. Treasuries are considered to have no credit risk and are the benchmark for interest rates on all other securities in the US and overseas. The Treasury issues both discounted securities and fixed coupon notes and bonds.

All securities issued with initial maturities of one year or less are issued as discounted instruments and are called Treasury bills. The Treasury currently issues three- and six-month T-bills at regular weekly auctions. It also issues "cash management" bills as needed to smooth out cash flows.

All securities issued with initial maturities of two to ten years are called Treasury notes and pay interest semi-annually.

TREASURY BONDS: All securities issued with initial maturities greater than ten years are called Treasury bonds. Like Treasury notes, they pay interest semi-annually.

UNIFORM NET CAPITAL RULE: Securities and Exchange Commission requirement that member firms as well as nonmember broker-dealers in securities maintain a maximum ratio of indebtedness to liquid capital of 15 to 1; also called net capital rule and net capital ratio. Indebtedness covers all money owed to a firm, including margin loans and commitments to purchase securities, one reason new public issues are spread among members of underwriting syndicates. Liquid capital includes cash and assets easily converted into cash.

YIELD TO MATURITY: The annualized internal rate of return on an investment which equates the expected cash flows from the investment to its cost.

City of Brea

COUNCIL COMMUNICATION

TO: Honorable Mayor and City Council Members

FROM: Bill Gallardo, City Manager

DATE: 08/17/2021

SUBJECT: Successor Agency Disbursement Registers July 26, 2021 and July 30, 2021

RECOMMENDATION

Receive and File.

RESPECTFULLY SUBMITTED:

William Gallardo, City Manager
Prepared by: Lillian Harris-Neal, City Clerk

Attachments

07-30-2021 Successor Agency Disbursement Register

Successor Agency Disbursement Register

Between Jul 26, 2021 12:00 AM and Jul 30, 2021 11:59 PM

Check #	Vendor Name	Check Date	Vendor #	Budget Unit	Description	Amount
2823	THE BANK OF NEW YORK MELLON	07/30/2021	4202	813000000	2003 TAX ALLOC BOND	$2,565.20
			THE BANK OF NEW YORK MELLON		**Total Check Amount:**	**$2,565.20**
2824	CITY OF BREA	07/30/2021	1003	511	REIMB COST 20/21 JUN	$1,567.45
			CITY OF BREA		**Total Check Amount:**	**$1,567.45**

Overall - Total $4,132.65